MCDONALD'S - KANSAS CITY, KS

SITE PLAN

SHEET INDEX:

C0.1	COVER SHEET
1&2 OF 2	ALTA SURVEY
C1.1	DEMO PLAN
C2.1	LAYOUT PLAN
C2.2 - C2.6	DRIVE-THRU PLANS
C3.1	GRADING PLAN
C4.1	UTILITY PLAN
C4.2	LIGHTING PLAN
C5.1	LANDSCAPE PLAN
C6.1	DETAILS SHEET
C7.1	SWPPP

PROPERTY DESCRIPTION:

PER TITLE COMMITMENT #KCC251409
LOT 1, ARGENTINE INDUSTRIAL PARK SECOND PLAT, A SUBDIVISION IN KANSAS CITY, WYANDOTTE COUNTY, KANSAS

SAID TRACT CONTAINING 60,026 SQUARE FEET OR 1.3780 ACRES

SUBJECT TO AND TOGETHER WITH ANY AND ALL EASEMENTS AND RESTRICTIONS OF RECORD

ADDRESS:

2320 METROPOLITAN AVENUE
KANSAS CITY, KANSAS 6

OWNER:

ARGENTINE RETAIL DEVELOPERS INC
4705 CENTRAL STREET
KANSAS CITY, MO 64112

PREPARED FOR/CONTRACT BUYER:

MCDONALD'S USA, LLC
CONTACT: JOSH GATEWOOD
711 JORIE BLVD, 3RD FLOOR
OAK BROOK, IL 60523
PH: (913) 547-9367

PROJECT ENGINEER:

BISHOP ENGINEERING
JOEL JACKSON
3501 104TH STREET
URBANDALE, IA 50322
PH: (515) 276-0467
JJACKSON@BISHOPENGR.COM

ZONING:

EXISTING: MP-1
PROPOSED: CP-2

BUILDING SETBACKS:

FRONT = 25 FEET
REAR = 0 FEET
SIDE = 0 FEET

PARKING REQUIREMENTS:

PARKING REQUIREMENTS: 1/3 SF OF SEATING AREA + 1/REMAINING 300 SF OF GFA
PARKING REQUIRED = 29 STALLS REQUIRED
PARKING PROVIDED = 39 STALLS (INCL. 2 HC STALLS)

OPEN SPACE REQUIREMENTS:

TOTAL SITE AREA = 60,026 SF
OPEN SPACE PROVIDED = 15,801 SF (26.3%)

IMPERVIOUS SURFACE:

TOTAL SITE AREA = 60,026 SF
EXISTING IMPERVIOUS SURFACE = 5,753 SF (9.58%)
PROPOSED IMPERVIOUS SURFACE = 44,225 SF (73.7%)
NET CHANGE = 38,472 SF

BENCHMARK:

BASIS OF BEARING SOUTH 87° 57' 55" WEST ALONG SOUTH LINE OF LOT 1
DATUM = NAD83, KANSAS STATE PLANE NORTH ZONE
BENCHMARK DATUM = NAVD88

POINT #1, CHISELED SQUARE
NORTHING = 287188.99
EASTING = 2261540.19
ELEVATION = 760.75
DESCRIPTION: IN THE NORTHEAST CORNER OF A CURB INLET, LOCATED ON THE SOUTH SIDE ON 2300 METROPOLITAN AVENUE PARKING

POINT #2, CHISELED SQUARE
NORTHING = 287170.61
EASTING = 2261236.15
ELEVATION = 756.83
DESCRIPTION: IN THE SOUTHWEST CORNER OF A CURB INLET, LOCATED IN THE NORTHEAST QUADRANT OF 24TH STREET AND AN ACCESS ROAD TO THE PARKING LOT OF 2300 METROPOLITAN

GENERAL NOTES:

1. ALL WORK IN PUBLIC EASEMENTS AND RIGHT-OF-WAY AND ALL EROSION CONTROL WORK MUST COMPLY WITH THE LATEST EDITION OF THE TECHNICAL PROVISIONS & STANDARD DRAWINGS FOR ROADS AND SEWERS, OF THE UNIFIED GOVERNMENT OF WYANDOTTE COUNTY/KANSAS CITY, KANSAS. IF ANY OF THE GENERAL NOTES CONFLICT WITH THE TECHNICAL PROVISIONS & STANDARD DRAWINGS FOR ROADS AND SEWERS, OF THE UNIFIED GOVERNMENT OF WYANDOTTE COUNTY/KANSAS CITY, KANSAS (THE UG), THE UG'S STANDARDS SHALL OVERRIDE.
2. THE CONTRACTOR SHALL BE RESPONSIBLE FOR THE LOCATION OF ALL UTILITIES. ANY DAMAGE TO SAID UTILITIES SHALL BE REPAIRED AT THE CONTRACTORS EXPENSE.
3. ALL WORK SHALL BE DONE IN ACCORDANCE WITH THE CURRENT O.S.H.A. CODES AND STANDARDS. NOTHING INDICATED ON THESE PLANS SHALL RELIEVE THE CONTRACTOR FROM COMPLYING WITH THE APPROPRIATE SAFETY REGULATIONS.
4. ALL NECESSARY CONSTRUCTION SIGNS, BARRICADES AND OTHER TRAFFIC CONTROL DEVICES REQUIRED DURING CONSTRUCTION WILL BE FURNISHED BY THE CONTRACTOR. SIGNS, BARRICADES AND OTHER TRAFFIC CONTROL DEVICES MUST BE IN CONFORMANCE WITH THE "MANUAL ON UNIFORM TRAFFIC CONTROL DEVICES FOR STREETS AND HIGHWAYS."
5. BISHOP ENGINEERING SHALL NOT BE LIABLE FOR ANY INJURIES THAT HAPPEN ON SITE. THIS SHALL INCLUDE BUT NOT BE LIMITED TO TRENCH COLLAPSES FROM VARYING SOIL CONDITIONS OR INJURIES CAUSED BY UNDERGROUND UTILITIES INCLUDING UTILITIES THAT ARE NOT SHOWN ON PLAN.
6. THE CONTRACTOR IS LIABLE FOR ALL DAMAGES TO PUBLIC OR PRIVATE PROPERTY CAUSED BY THEIR ACTION OR INACTION IN PROVIDING FOR STORM WATER FLOW DURING CONSTRUCTION. DO NOT RESTRICT FLOWS IN EXISTING DRAINAGE CHANNELS, STORM SEWER, OR FACILITIES.
7. THE CONTRACTOR SHALL SUBMIT TO THE ENGINEER A SCHEDULE FOR PERFORMANCE OF WORK ITEMS. THIS SCHEDULE SHALL BE PROVIDED BY THE CONTRACTOR AT THE PROJECT PRECONSTRUCTION CONFERENCE. NO WORK SHALL BEGIN UNTIL A SCHEDULE HAS BEEN SUBMITTED AND ACCEPTED. THE CONTRACTOR SHALL THEN PERFORM WORK TO CONFORM TO THE ACCEPTED SCHEDULE.
8. LABORATORY TESTS SHALL BE PERFORMED BY THE OWNER UNLESS OTHERWISE NOTED. THE CONTRACTOR SHALL PROVIDE SAMPLES OF MATERIAL REQUIRED FOR LABORATORY TESTS AND TESTING IN ACCORDANCE WITH THE URBAN STANDARD SPECIFICATIONS FOR PUBLIC IMPROVEMENTS.
9. SOIL IMPORT OR EXPORT ON THIS PROJECT SHALL BE CONSIDERED INCIDENTAL AND WILL NOT BE MEASURED OR PAID FOR SEPARATELY.
10. THE CONTRACTOR SHALL PROTECT ALL STRUCTURES NOT SHOWN AS REMOVALS ON THE PLANS.
11. THE CONTRACTOR SHALL OBTAIN ANY AND ALL NECESSARY PERMITS INCLUDING THE KDHE NPDES CONSTRUCTION STORMWATER GENERAL PERMIT PRIOR TO ANY CONSTRUCTION. CONTRACTOR SHALL WORK WITH OWNER OR OWNERS REPRESENTATIVE ON ALL REQUIRED PERMITS FROM THE KANSAS DEPARTMENT OF HEALTH AND ENVIRONMENT, UNIFIED GOVERNMENT OF WYANDOTTE COUNTY, AND THE KANSAS CITY PUBLIC WORKS DEPARTMENT.
12. GRADING AND EROSION CONTROL SHALL BE DONE IN ACCORDANCE WITH THE APPROVED GRADING PLAN, SWPPP, NPDES DOCUMENTS, AND KANSAS DEPARTMENT OF HEALTH AND ENVIRONMENT REQUIREMENTS.
13. THE CONTRACTOR SHALL PICK UP ANY DEBRIS SPILLED ONTO THE ADJACENT RIGHT OF WAY OR ABUTTING PROPERTIES AS THE RESULT OF CONSTRUCTION, AT THE END OF EACH WORK DAY.
14. THE CONTRACTOR IS RESPONSIBLE FOR THE PROMPT REMOVAL OF ALL MUD THAT HAS BEEN TRACKED OR WASHED UNTO ADJACENT PROPERTY OR RIGHT OF WAY UNTIL SUCH TIME THAT PERMANENT VEGETATION HAS BEEN ESTABLISHED.
15. DISPOSE OF ALL EXCESS MATERIALS AND TRASH IN ACCORDANCE WITH FEDERAL, STATE, AND LOCAL REQUIREMENTS. PROVIDE WASTE AREAS OR DISPOSAL SITES FOR EXCESS MATERIALS NOT DESIRABLE FOR INCORPORATION INTO THE PROJECT.

PAVING NOTES:

1. SEE DETAILS FOR ALL PAVEMENT THICKNESS.
2. ALL WALKS, PARKING LOTS, HANDICAP PARKING, RAMPS, ETC. SHALL COMPLY WITH ALL A.D.A. AND CITY CODES. HANDICAP PARKING SIGNAGE IS REQUIRED FOR ALL HANDICAP STALLS AND SHALL BE CONSIDERED INCIDENTAL. IN EVENT OF A DISCREPANCY BETWEEN THE PLANS AND THE A.D.A./CITY CODES THE A.D.A/CITY CODES SHALL GOVERN. CONTRACTOR SHALL BE RESPONSIBLE FOR ENSURING A.D.A. CODES ARE MET.

UTILITY NOTES:

1. THE CONTRACTOR SHALL COORDINATE THE ADJUSTMENT OF ANY AND ALL EXISTING AND PROPOSED UTILITIES TO PROPOSED GRADES. EXISTING UTILITIES SHALL BE RAISED OR LOWERED IN ACCORDANCE WITH THE UTILITY OWNER REQUIREMENTS. ANY NECESSARY ADJUSTMENTS SHALL BE CONSIDERED INCIDENTAL TO CONSTRUCTION.
2. ACTIVE EXISTING FIELD TILES ENCOUNTERED DURING CONSTRUCTION SHALL BE REPAIRED, REROUTED, OR CONNECTED TO PUBLIC OR PRIVATE STORM SEWER TO REMAIN IN SERVICE.

UTILITY CONFLICT NOTES:

1. UTILITY CONFLICTS MAY EXIST ACROSS THE SITE WITH NEW UTILITIES, GRADING, PAVING ETC. MOST UTILITY CONFLICTS HAVE BEEN CALLED OUT FOR CONTRACTOR CONVENIENCE.
2. CONTRACTOR IS RESPONSIBLE FOR ALL UTILITY CONFLICTS THAT ARE EITHER CALLED OUT ON THE PLANS OR THAT CAN BE SEEN ON THE PLANS BETWEEN AND EXISTING UTILITY AND PROPOSED CONSTRUCTION.

SURVEY NOTES:

1. SURVEY WORK WAS COMPLETED BY BHC ON 06/30/2025. SEE SITE SURVEY PROVIDED AS PART OF THIS SET OF PLANS FOR EXISTING SITE CONDITIONS AND BOUNDARY INFORMATION.

LAND DISTURBANCE:

TOTAL DISTURBED AREA = 1.2 AC MORE OR LESS
CUT = 5209 CY
FILL = 40 CY
NET = 5169 CY

UNIFIED GOVERNMENT CONTACTS:

SEWER MAINTENANCE DEPARTMENT
KEVIN SWEARENGIN OR KIRK ROLAND
(913) 573-1360

CONTACT KANSAS ONE CALL AT 1-800-DIG-SAFE

SUBGRADE PREP NOTES:

SHAPE AND CONSOLIDATE SUBGRADE IN PREPARATION FOR THE PLACEMENT OF PAVEMENT.
A. UNIFORM COMPOSITION: PROVIDE UNIFORM COMPOSITION OF AT LEAST 12 INCHES BELOW TOP OF SUBGRADE UNDER NEW PAVING OR SUBBASE, PLUS 2 FEET ON EACH SIDE. USE SELECT SUBGRADE MATERIALS (SEE NOTES) UNLESS GRANULAR STABILIZATION MATERIALS OR SUBGRADE TREATMENT IS SPECIFIED.

1. SUBGRADE COMPACTION IN FILL SECTIONS:
   A. FOLLOW THE COMPACTION WITH MOISTURE AND DENSITY CONTROL REQUIREMENTS.
   B. CONSTRUCT IN TWO 6 INCH LIFTS.
2. SUBGRADE COMPACTION IN CUT SECTIONS:
   A. EXCAVATE AND STOCKPILE THE TOP 6 INCHES OF SUBGRADE.
   B. SCARIFY, MIX, AND RE-COMPACT THE NEXT 6 INCHES OF SUBGRADE.
   C. REPLACE, MIX, AND COMPACT THE TOP 6 INCHES OF SUBGRADE.
3. REMOVE STONES OVER 3 INCHES FROM SUBGRADE.
4. CONSTRUCT TO ELEVATION AND CROSS-SECTION SUCH THAT, AFTER ROLLING, SURFACE WILL BE ABOVE REQUIRED SUBGRADE ELEVATION.

B. SUBGRADE STABILITY:

1. PERFORM PROOF ROLLING WITH A TRUCK LOADED TO THE MAXIMUM SINGLE LEGAL AXLE GROSS WEIGHT OF 20,000 POUNDS OR THE MAXIMUM TANDEM AXLE GROSS WEIGHT OF 34,000 POUNDS. OPERATE TRUCKS AT LESS THAN 10 MPH. MAKE MULTIPLE PASSES FOR EVERY LANE. THE SUBGRADE WILL BE CONSIDERED TO BE UNSTABLE IF, UNDER THE OPERATION OF THE LOADED TRUCK, THE SURFACE SHOWS YIELDING (SOIL WAVE IN FRONT OF THE LOADED TIRES) OR RUTTING OF MORE THAN 2 INCHES, MEASURED FROM THE TOP TO THE BOTTOM OF THE RUT AT THE OUTSIDE EDGES.
2. IF SOFT OR YIELDING AREAS ARE LOCATED, REMOVE UNSTABLE MATERIALS AND REPLACE WITH SUITABLE FOUNDATION MATERIALS AS APPROVED BY THE SOILS ENGINEER. COMPACT SUBGRADE MATERIALS IN CUT SECTIONS AS REQUIRED BY THE SOILS ENGINEER. IF STABILIZATION MATERIAL IS USED, PLACE AND COMPACT AS REQUIRED FOR SUBBASE.

C. FINAL SUBGRADE: COMPLETE FINAL SUBGRADE BY EXCAVATION TO GRADE BY USE OF STEEL-SHOD TEMPLATE SUPPORTED ON SIDE FORMS, SUPPORT ROLLERS, OR BY USE OF AN AUTOMATICALLY-CONTROLLED SUBGRADE EXCAVATING MACHINE.
D. SUBGRADE CHECK: CHECK SUBGRADE ELEVATION AND GRADE BY METHOD APPROVED BY ENGINEER PRIOR TO PAVING.
E. RUTS: IF RUTS OR OTHER OBJECTIONABLE IRREGULARITIES FORM IN SUBGRADE DURING CONSTRUCTION, RE-SHAPE AND RE-ROLL SUBGRADE BEFORE PLACING PAVEMENT. FILL RUTS OR OTHER DEPRESSIONS WITH MATERIAL SIMILAR TO OTHER SUBGRADE MATERIAL, AND COMPACT.

SUBGRADE MATERIALS NOTES:

1. ALL SOILS REQUIRED FOR SELECT SUBGRADE MATERIALS MUST BE APPROVED BY THE SOILS ENGINEER. APPROVAL OF MATERIALS AND THEIR USE WILL BE BASED ON AASHTO M 145.
   A. COHESIVE SOILS MUST MEET ALL OF THE FOLLOWING REQUIREMENTS:
      1) 45% OR LESS SILT SIZE FRACTION.
      2) DENSITY OF 110 PCF OR GREATER ACCORDING TO ASTM D 698 OR AASHTO T 99 (STANDARD PROCTOR DENSITY).
      3) PLASTICITY INDEX GREATER THAN 10.
      4) A-6 OR A-7-6 SOILS OF GLACIAL ORIGIN.
   B. GRANULAR SOILS MUST MEET ALL OF THE FOLLOWING REQUIREMENTS:
      1) DENSITY OF 110 PCF OR GREATER ACCORDING TO ASTM D 698 OR AASHTO T 99 (STANDARD PROCTOR DENSITY).
      2) 15% OR LESS SILT AND CLAY.
      3) PLASTICITY INDEX OF 3 OR LESS.
      4) A-1, A-2, OR A-3 (0).
2. CRUSHED STONE, CRUSHED PCC, CRUSHED COMPOSITE PAVEMENT, OR RAP; MIXTURES OF GRAVEL, SAND, AND SOIL; OR UNIFORMLY-BLENDED COMBINATIONS OF THE ABOVE; AS APPROVED BY THE SOILS ENGINEER.
3. THE SOILS ENGINEER MAY AUTHORIZE A CHANGE IN SELECT SUBGRADE MATERIALS SUBJECT TO MATERIALS AVAILABLE LOCALLY AT TIME OF CONSTRUCTION.

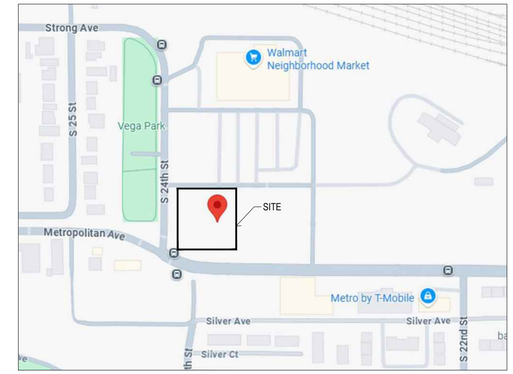

VICINITY MAP
NOT TO SCALE

LEGEND:

- SAN — SANITARY SEWER
- ST — STORM SEWER
- W — WATER LINE
- G — GAS LINE
- U/E — UNDERGROUND ELECTRIC
- O/E — OVERHEAD ELECTRIC
- TELE — TELEPHONE LINE
- F/O — FIBER OPTIC
- CATV — CABLE TV
- STORM MANHOLE
- CURB INTAKE
- SURFACE INTAKE
- FLARED END SECTION
- SANITARY MANHOLE
- CLEANOUT
- FIRE HYDRANT
- SPRINKLER
- IRRIGATION CONTROL VALVE
- WATER MANHOLE
- WELL
- WATER VALVE
- WATER SHUT OFF
- YARD HYDRANT
- ELECTRIC MANHOLE
- ELECTRIC METER
- ELECTRIC RISER
- ELECTRIC VAULT
- POWER POLE
- TRANSFORMER POLE
- LIGHT POLE
- ELECTRIC JUNCTION BOX
- ELECTRIC PANEL
- TRANSFORMER
- GROUND LIGHT
- GUY WIRE
- ELECTRIC HANDHOLE
- GAS METER
- GAS VALVE
- AIR CONDITIONING UNIT
- TELEPHONE RISER
- TELEPHONE VAULT
- TELEPHONE MANHOLE
- TRAFFIC SIGNAL MANHOLE
- FIBER OPTIC RISER
- FIBER OPTIC FAULT
- CABLE TV RISER
- SIGN
- DENOTES NUMBER OF PARKING STALLS
- PROPERTY CORNER - FOUND AS NOTED
- SECTION CORNER - FOUND AS NOTED

ABBREVIATIONS:

AC	ACRES
ASPH	ASPHALT
BK	BOOK
CONC	CONCRETE
D	DEEDED DISTANCE
EX	EXISTING
ENCL	ENCLOSURE
FF	FINISHED FLOOR
FL	FLOW LINE
FRAC	FRACTIONAL
M	MEASURED DISTANCE
MH	MANHOLE
OPC	ORANGE PLASTIC CAP
P	PLATTED DISTANCE
PG	PAGE
POB	POINT OF BEGINNING
POC	POINT OF COMMENCEMENT
PRA	PREVIOUSLY RECORDED AS
PUE	PUBLIC UTILITY EASEMENT
ROW	RIGHT OF WAY
RPC	RED PLASTIC CAP
SF	SQUARE FEET
SAN	SANITARY
TYP	TYPICAL
YPC	YELLOW PLASTIC CAP
N	NORTH
S	SOUTH
E	EAST
W	WEST

UTILITY NOTE:

THE LOCATION OF THE UTILITIES INDICATED ON THE PLANS HAVE BEEN TAKEN FROM THE FIELD SURVEY, EXISTING PUBLIC RECORDS, AND PLANS PROVIDED BY OTHERS. SURFACE UTILITY LOCATIONS HAVE BEEN FIELD LOCATED BY BISHOP ENGINEERING, UNLESS OTHERWISE NOTED. ALL UNDERGROUND UTILITY LOCATIONS ARE APPROXIMATE LOCATIONS ONLY. BISHOP ENGINEERING DOES NOT GUARANTEE THE UNDERGROUND LOCATION OF ANY UTILITIES SHOWN. IT SHALL BE THE DUTY OF THE CONTRACTOR TO DETERMINE THE LOCATION AND DEPTH OF ANY UNDERGROUND UTILITIES SHOWN AND IF ANY ADDITIONAL UTILITIES, OTHER THAN THOSE SHOWN ON THE PLANS, MAY BE PRESENT. A REQUEST WAS MADE TO ONE CALL FOR UTILITY PROVIDERS TO VERIFY, LOCATE, AND MARK THEIR UTILITIES IN THE FIELD.

COPYRIGHT 2025 BISHOP ENGINEERING. THIS DOCUMENT AND THE INFORMATION CONTAINED MAY NOT BE REPRODUCED OR EXCERPTED WITHOUT THE EXPRESS WRITTEN PERMISSION OF BISHOP ENGINEERING. UNAUTHORIZED COPYING OR DISCLOSURE OF CONSTRUCTION USE ARE PROHIBITED BY COPYRIGHT LAW.

I HEREBY CERTIFY THAT THESE PLANS HAVE BEEN PREPARED UNDER MY SUPERVISION AND THAT TO THE BEST OF MY KNOWLEDGE, THE SAME COMPLY WITH ALL RULES, REGULATIONS AND ORDINANCES OF THE CITY OF KANSAS CITY RELATING TO STRUCTURES AND BUILDINGS.

MY LICENSE RENEWAL DATE IS: 04-30-2026

DAVID B. BENTZ — KS PE-LIC-27078 — DATE 12/1/2025

PAGES OR SHEET COVERED BY THIS SEAL: C0.1, C1.1 - C7.1

REV	DATE	DESCRIPTION	BY
0	12/1/2025	PERMIT SET	JEJ

SEAL
DAVID B BENTZ LICENSED 27078 KANSAS PROFESSIONAL ENGINEER
DATE: 12/1/2025

PREPARED BY:
BISHOP ENGINEERING +
3501 104th Street, Urbandale, IA 50322 Ph: 515-276-0467

PREPARED FOR:
McDonald's USA, LLC

© 2025 McDonald's USA, LLC
These drawings and specifications are the confidential and proprietary property of McDonald's USA, LLC and shall not be copied or reproduced without written authorization. The contract documents were prepared for use on this specific site in conjunction with its issue date and are not suitable for use on any other site or in any other jurisdiction. Re-use of these drawings for reference or example on another project requires the services of properly licensed architects and engineers. Reproduction of the contract documents for re-use on another project is not authorized.

DRAWN BY	STD ISSUE DATE	REVIEWED BY	DATE ISSUED
CLT	12-1-2025	JEJ	12-1-2025

TITLE: KANSAS CITY SITE PLAN
DESCRIPTION: COVER SHEET
SITE ID: 140405
SITE ADDRESS: 2320 METROPOLITAN AVE, KANSAS CITY, KS 66106
SHEET NO. C0.1
BE #250004-2

12/1/2025 11:56:23 AM \\BE-FS01\PROJECTS\2LAND PROJECTS 2025\250004-2 MCDONALD'S - KANSAS CITY, KS - METROPOLITAN AVE - WEST SITE\DWG\C0 COVER.DWG

ALTA / NSPS LAND TITLE SURVEY
LOT 2, ARGENTINE INDUSTRIAL PARK, SECOND PLAT
A SUBDIVISION IN THE CITY OF
KANSAS CITY, WYANDOTTE COUNTY, KANSAS

GRAPHIC SCALE

20 0 20

1 inch = 20 feet

LEGEND

○	Found Survey Monument
℄	Center Line
R/W	Right-of-Way
(M)	Monumented
(P)	Platted
(CP)	Calculated from Plat
BK.	Book
PG.	Page
DOC.	Document Number
(XX)	Schedule B Identifier
-\/-	Not To Scale

SECTION MAP

SECTION 20-T11S-R25E
(NOT TO SCALE)

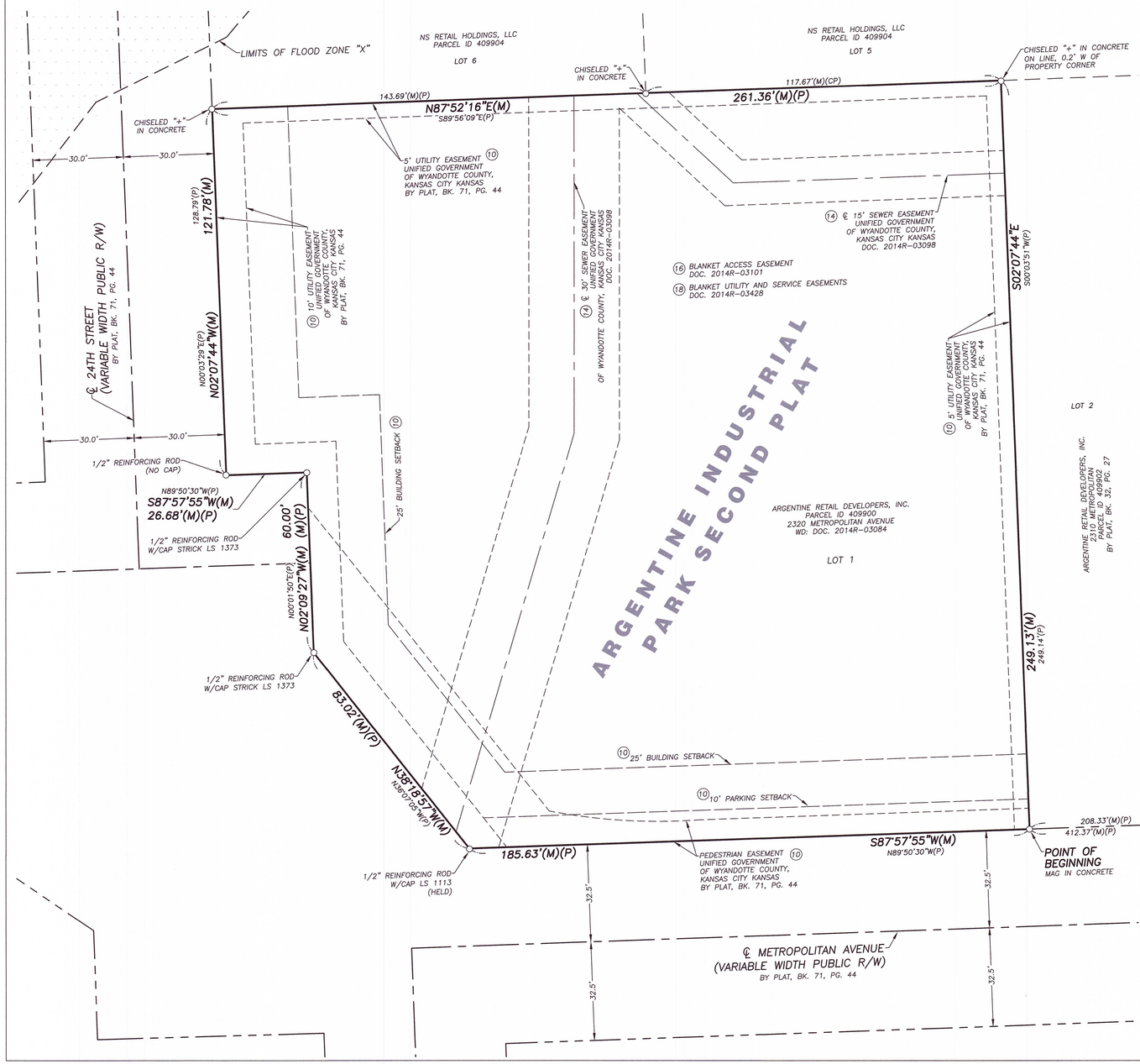

TITLE COMMITMENT

Commitment Number: KCC251409
Effective Date: June 6, 2025, at 08:00 AM

Chicago Title Insurance Company
6700 College Blvd
Overland Park, KS 66211
Ph.: (913) 451-1026

PROPERTY DESCRIPTION:

(Per Title Commitment #KCC251409)
Lot 1, Argentine Industrial Park Second Plat, a subdivision in Kansas City, Wyandotte County, Kansas.

Being the same property as described below based on field measurements:
A Tract of land being all of Lot 1, ARGENTINE INDUSTRIAL PARK SECOND PLAT, a subdivision on land in the City of Kansas City, Wyandotte County, Kansas recorded September 30, 2024 and filed as Document Number 2014R-12621, in Book 71, Page 44, said Tract as surveyed by Matthew B. Schepmann, LS-1639 of BHC, KS CLS-175, by metes and bounds as follows:

(Note: For course orientation the bearings in this description are based on the South line of Lot 1, ARGENTINE INDUSTRIAL PARK SECOND PLAT, having a bearing of South 87° 57' 55" West, referenced to the Kansas State Plane Coordinate System, North Zone, NAD83.)

BEGINNING at the Southeast corner of Lot 1, ARGENTINE INDUSTRIAL PARK SECOND PLAT, monumented by a found mag nail in concrete;
Thence South 87° 57' 55" West, 185.63 feet on the North Right-of-Way line of Metropolitan Avenue, also being the South line of said Lot 1;
Thence North 38° 18' 57" West, 83.02 feet, on said North Right-of-Way line, and said South line;
Thence North 02° 09' 27" West, 60.00 feet, on said North Right-of-Way line, and said South line;
Thence South 87° 57' 55" West, 26.68 feet, on said North Right-of-Way line, and said South line, to its intersection with the East Right-of-Way line of 24th Street, also being the West line of said Lot 1;
Thence North 02° 07' 44" West, 121.78 feet, on said East Right-of-Way line, and said West line, to the Northwest corner of said Lot 1;
Thence North 87° 52' 16" East, 261.36 feet, on the North line of said Lot 1, to the Northeast corner of said Lot 1;
Thence South 02° 07' 44" East, 249.13 feet, on the East line of said Lot 1, to the POINT OF BEGINNING, said Tract containing 60,026 square feet or 1.3780 acres.

Subject to and together with any and all easements and restrictions of record.

GENERAL NOTES

1. Basis of Bearings: South 87° 57' 55" West along the South line of Lot 1, ARGENTINE INDUSTRIAL PARK SECOND PLAT, referenced to the Kansas State Plane Coordinate System, North Zone (NAD83).

2. This survey is based on field work completed on or before the date shown in the title block or the following plat:
-The plat of "ARGENTINE INDUSTRIAL PARK SECOND PLAT" recorded September 30, 2024 and filed as Document Number 2014R-12621, in Book 71, Page 44.
-The plat of "ARGENTINE INDUSTRIAL PARK" recorded August 11, 1992 and filed as Document Number 1140388, in Book 37, Page 27.
-The plat of "GABRIEL PLACE" recorded August 1, 1975 and filed as Document Number 820084, in Book 32, Page 67.

3. This Tract contains 60,026 square feet or 1.3780 acres.

4. This property appears to lie within Flood Zone "X" (Areas determined to be outside the 0.2% annual chance floodplain) OR Flood Zone "D" (Areas in which flood hazards are undetermined, but possible), as shown on the WYANDOTTE COUNTY, KANSAS AND INCORPORATED AREAS Flood Insurance Rate Map (F.I.R.M.).

Map Number: 20209C0160E
Panel No: 160 of 210
Map Revised Date: February 5, 2014

ALTA / NSPS TABLE A OPTION NOTES

Table A items not addressed below are addressed on either the map or within other headings hereon.

6(a)(b). If the current zoning classification, setback requirements, the height and floor space area restrictions, and parking requirements specific to the surveyed property are set forth in a zoning report or letter provided to the surveyor by the client or the client's designated representative, list the above items on the plat or map and identify the date and source of the report or letter. *No zoning report was supplied to this surveyor at the time of survey. No zoning report was supplied to this surveyor at the time of survey. The subject property is currently zoned C-D, Central Business District. Zoning information provided by the Unified Government of Wyandotte County, Kansas City Kansas web site https://www.wycokck.org/Departments/Planning-and-Urban-Design/Zoning-Code*

7(a), (b), (c). Exterior dimensions of all buildings at ground level. *No buildings were found on the subject property at the time of survey.*

9. Number and type (e.g., disabled, motorcycle, regular and other marked specialized types) of clearly identifiable parking spaces on surface parking areas, lots and in parking structures. *No parking spaces were found on the subject property at the time of survey.*

10. As designated by the client, a determination of the relationship and location of certain division or party walls with respect to adjoining properties. *No party walls were found on the subject property at the time of survey.*

14. As specified by the client, distance to the nearest intersecting street. *The Southwest corner of the subject property lies in the Northeast quadrant of the intersection of Metropolitan Avenue and 24th Street Road.*

16. Evidence of recent earth moving work, building construction, or building additions observed in the process of conducting the fieldwork. *No evidence of recent earth moving was observed on or around the subject property during the process of this survey.*

17. Proposed changes in street right of way lines, if such information is made available to the surveyor by the controlling jurisdiction. Evidence of recent street or sidewalk construction or repairs observed in the process of conducting the fieldwork. *The surveyor is unaware of any proposed changes in street right of way lines, and did not observe any evidence of recent street or sidewalk constructions or repairs during the course of conducting fieldwork.*

SURVEYOR'S NOTES

1. This surveyor has made no search at the county Register of Deeds office or searched court documents for easements, vacations, Right-of-Way acquisitions, condemnations, court decrees or encumbrances that may affect this property. The aforementioned items shown hereon are based entirely upon the title report cited above, by documents found in this firms possession, documents obtained from other sources, or other information. If any other easements, vacations, Right-of-Way acquisitions, condemnations, court decrees or encumbrances affect this property their existence is unknown to this surveyor and are therefore not shown.

NOTES CORRESPONDING TO SCHEDULE B EXCEPTIONS

Items 1 through 9 and 22 through 23, are standard exceptions or are not plottable survey matters and are not addressed hereon.

(10) Building and Parking Setback Lines, Pedestrian Easement, Sewer Easement and Cross Access Agreement which are shown on the recorded plat filed September 30, 2014 in Plat Book 71, Page 44.

The plat this item refers to is ARGENTINE INDUSTRIAL PARK SECOND PLAT

GENERAL UTILITY EASEMENTS:
-5' Utility Easement: The plat depicts a 5 feet wide utility easement along the perimeter of the North, and East lines within the subject property and is plotted hereon. The dedication on the plat grants the easement to the Unified Government of Wyandotte County, Kansas City, Kansas.

-10' Utility Easement: The plat depicts a 10 feet wide utility easement along the perimeter of the West line within the subject property and is plotted hereon. The dedication on the plat grants the easement to the Unified Government of Wyandotte County, Kansas City, Kansas.

PEDESTRIAN EASEMENTS:
-Pedestrian Easement: The plat depicts a variable width pedestrian easement along the perimeter of the South line within the subject property and is plotted hereon. The dedication on the plat grants the easement to the Unified Government of Wyandotte County, Kansas City, Kansas.

SEWER EASEMENTS:
-See Schedule B exception 14 above.

CROSS ACCESS AGREEMENT:
-A Cross Access Agreement shall exist between all Lots within the boundary of said plat, said Cross Access Agreement shall be binding upon the heirs, successors and assigns of the owners. This agreement is blanket in nature, encompasses the entire subject property (and other property) and is annotated hereon. No dedication appears on the plat for this Cross Access Agreement.

BUILDING SETBACK LINES:
- The plat depicts a 25 feet building setback along the South and West lines of the subject property and is plotted hereon. No dedication appears on the plat for this setback.

PARKING SETBACK LINES:
-The plat depicts a 10 foot parking setback along the South line of the subject property and is plotted hereon. No dedication appears on the plat for this setback.

(11) Terms, provisions and conditions of Consent Decree dated March 10, 1992 in Case No. 92-CV-02095 in the United States District Court for the District of Kansas, captioned United States of America, Plaintiff, vs. ASARCo Incorporated, Defendant, relating to environmental remediation, removal, action or use, the existence of which is disclosed by the instrument recorded August 11, 1992 as Document No. 1140389 in Book 3570 at Page 3, *This document describes Lot 1, ARGENTINE INDUSTRIAL PARK, the subject property lies within the limits of said Lot 1, prior to being replatted, the subject property is plotted hereon within said limits.* And re-recorded on September 18, 1992 as Document No. 114243 1 in.

(12) Agreement and Covenant not to Sue filed in Book 3806, Page 86. *This document describes and graphically depicts Lot 1, ARGENTINE INDUSTRIAL PARK, the subject property lies within the limits of said Lot 1 prior to replatting, and is plotted hereon by virtue of the subject property. The covenants are not plottable survey matters and not addressed hereon.*
First Modification filed at Doc. No.2014R-03085. *Exhibit A of this document describes Lot 1, ARGENTINE INDUSTRIAL PARK, the subject property lies within the limits of said Lot 1 prior to replatting, and is plotted hereon by virtue of the subject property. The modifications to the above Book 3806, Page 79 are not plottable survey matters and not addressed hereon.*

(13) Terms and Provisions of Environmental Use Control Agreement by and between Argentine Retail Developers, Inc., a Kansas corporation, and Kansas Department of Health and Environment recorded as Document No. 2014R-03094. *Exhibit A and Exhibit 1 of this document graphically depicts the plat of ARGENTINE INDUSTRIAL PARK, the subject property lies within the limits of Lot 1 of said Plat, prior to being replatted, and is plotted hereon by virtue of the subject property. The terms and provisions are not plottable survey matters and not addressed hereon.*

(14) Sanitary' Sewer Easement granted to the Unified Government of Wyandotte County/Kansas City', Kansas recorded March 13, 2014 as Document No. 2014R-03098. *This 30' sanitary sewer easement lies within, and adjoins the North and South lines of the subject property and is plotted hereon, and a 15' sanitary sewer easement lies within, and adjoins the North and West lines of the subject property and is plotted hereon*

(15) Retaining Wall Easement filed as Document No. 2014R-03100. *This retaining wall easement does not lie within, cross or adjoin the subject property and is not plotted hereon.*

(16) Blanket Access Easement filed at Document No. 2014R-03101. *This access easement is blanket in nature, encompasses the entire subject property (and other property) and is annotated hereon.*

(17) Declaration of Restrictions filed at Document No. 2014R-03116. *The subject property is not described or graphically depicted within this document. The property described in Schedule A of this document adjoins the North line of the subject property. The declarations of restrictions are not plottable survey matters and not addressed hereon.*

(18) Easements with Covenants and Restrictions, as set forth in the document Recording No: 2014R-03428. *The utility and service easements described in this document are blanket in nature, encompasses the entire subject property (and other property) and is annotated hereon. Exhibit C of this document described the subject property (and other property) and is plotted hereon by virtue of the subject property.*

(19) Lot Split Survey filed at Doc. 2014R-03441. *The limits of Tract A of this lot split, encompasses the entire subject property (and other property), prior to being replatted, the subject property is plotted hereon within said limits.*

(20) Declaration of Covenants, including assessments and Maintenance Charges, filed at Doc. 2015R-13069. *Exhibit A of this document describes the subject property (and other property), and is plotted hereon by virtue of the subject property, the declarations are not plottable survey matters and not addressed hereon.*

(21) Soil Fill Easement filed at Doc. No. 2015R-18194. *Exhibit B of this document describes the subject property (and other property), and is plotted hereon by virtue of the subject property. This soil fill easement is blanket in nature, encompasses the entire subject property (and other property) and is annotated hereon.*

SURVEYOR'S CERTIFICATION

To Argentine Retail Developers, Inc. a Kansas corporation, McDonalds USA LLC, a Delaware limited liability company:

This is to certify that this map or plat and the survey on which it is based were made in accordance with the 2021 Minimum Standard Detail Requirements for ALTA/NSPS Land Title Surveys, jointly established and adopted by ALTA and NSPS, and includes Items 1, 2, 3, 4, 5, 6(a), 6(b), 7(a), 7(b)(1), 7(b)(2), 7(c), 8, 9, 10, 11, 12, 13, 14, 15, 16, 17, 18, 19, and 20 of Table A thereof. The fieldwork was completed on June 27, 2025

Date of Plat or Map: July 2, 2025

MATTHEW B. SCHEPMANN LICENSED PS-1639 KANSAS LAND SURVEYOR
07/02/2025

matthew.schepmann@bhc.com
BHC, KS CLS 175
Matthew B. Schepmann, LS-1639

REV	DATE	DESCRIPTION	BY

PREPARED BY:

BHC
712 State Avenue, Kansas City, KS 66101
Phone: (913) 371-5300

PREPARED FOR:

McDonald's USA, LLC

©2025 McDonald's USA, LLC

These drawings and specifications are the confidential and proprietary property of McDonald's USA, LLC and shall not be copied or reproduced without written authorization. The contract documents were prepared exclusively for this project in Kansas City, Kansas. They were not suitable for use on a different site or at a later time. Use of these drawings for reference or example on another project requires the express written consent of McDonald's USA, LLC. Any reuse of the contract documents for reuse on another project is not authorized.

DRAWN BY: CJW
STD ISSUE DATE: 2025/06/30
REVIEWED BY: MBS
DATE ISSUED: 2025/07/02

TITLE: KANSAS CITY, KS
ALTA/NSPS SURVEY

DESCRIPTION: ALTA SURVEY

SITE ID: 015-0400
SITE ADDRESS: 2320 METROPOLITAN AVE, KANSAS CITY, KS 66106

SHEET NO. 1 OF 2

BE# 250004-2

ALTA / NSPS LAND TITLE SURVEY
LOT 2, ARGENTINE INDUSTRIAL PARK, SECOND PLAT
A SUBDIVISION IN THE CITY OF
KANSAS CITY, WYANDOTTE COUNTY, KANSAS

GRAPHIC SCALE

20 0 20

1 inch = 20 feet

LEGEND

- Found Survey Monument
- Control Point and Designation (TC is for Survey Only)
- Benchmark
- Overhead Utility Line/s
- Underground Electric Line
- Utility Pole
- Utility Pole with Transformer
- Guy Anchor
- Utility Pole w/Light
- Light Pole
- Electric Access Vault (underground)
- Utility Pull Box (underground)
- Water Line
- Water Line
- Water Valve
- Fire Hydrant
- Underground Fiber Optic Line
- Fiber Optic Vault (underground)
- Traffic Control Manhole
- Sanitary Sewer Line
- Sanitary Sewer Manhole
- Polyvinyl Chloride Pipe
- Storm Sewer Manhole
- Curb Inlet
- Reinforced Concrete Pipe
- High-Density Polyethylene Pipe
- Pipe Continues-Outlet or Source Not Found or Not Surveyed
- Single Pole Sign
- ADA Detection Pad
- Deciduous Tree and Size
- Foliage Drip Line/Edge of Timber
- Not To Scale
- Spot Elevation
- Schedule B Identifier

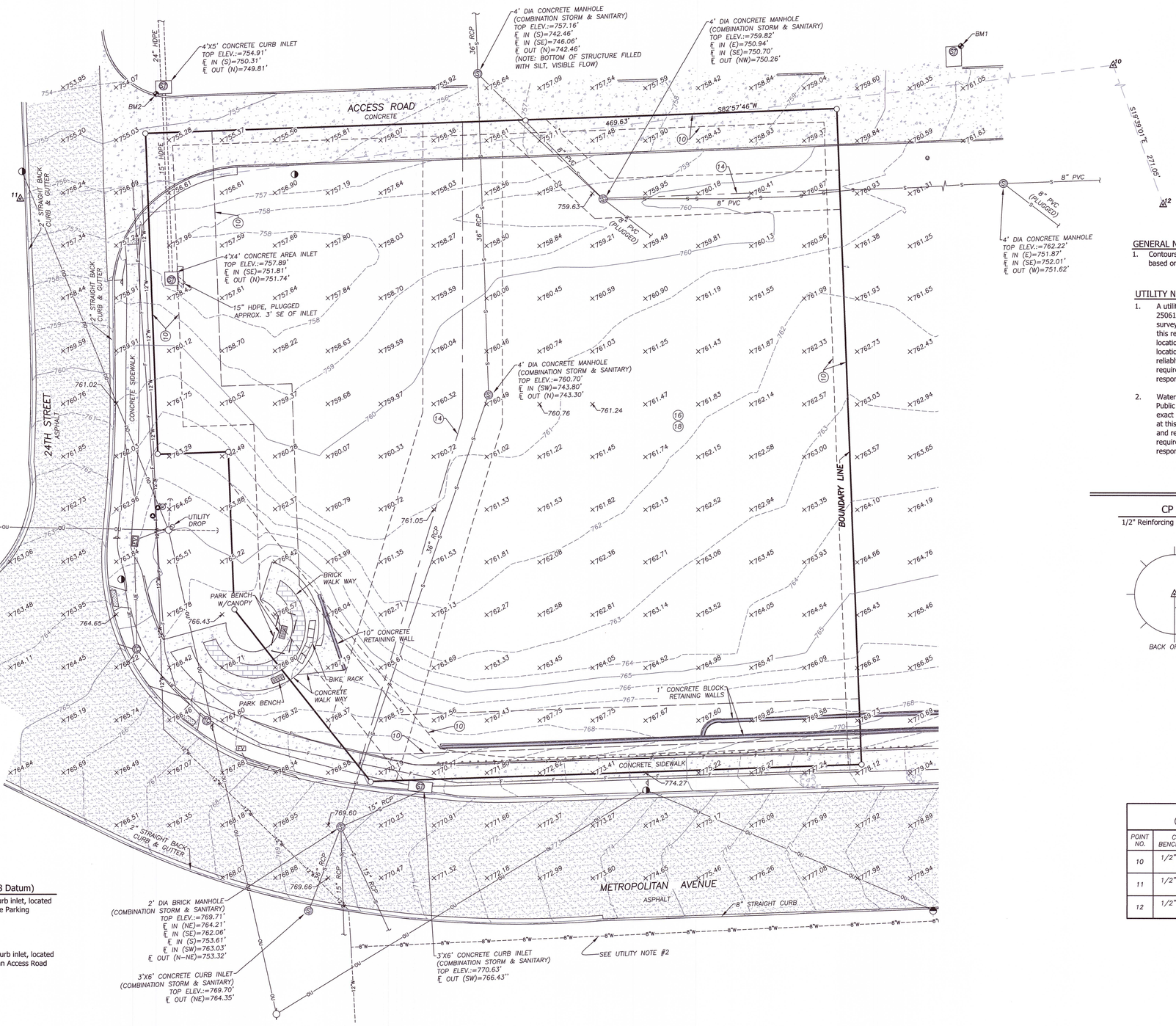

BENCHMARKS (NAVD88 Datum)

BM1 Chiseled square in the Northeast corner of a curb inlet, located on the South side on 2300 Metropolitan Avenue Parking

Elevation: 760.75

BM2 Chiseled square in the Southwest corner of a curb inlet, located in the Northeast Quadrant of 24th Street and an Access Road to the parking lot of 2300 Metropolitan.

Elevation: 756.83

SECTION MAP

SECTION 20-T11S-R25E

(NOT TO SCALE)

GENERAL NOTES

1. Contours are shown at 1 foot intervals, were based on a ground survey by this firm, and are based on NAVD88 datum.

UTILITY NOTES

1. A utility locate request was generated through Kansas One-Call under ticket number 25061791 on February 18, 2025, and ticket number 25088946 on March 5, 2025 for this survey. The underground utilities shown hereon are as located along the markings created by this request. They are representational only and are in no way intended to show their exact location, nor is this information to be construed as a complete inventory of all utilities at this location. The exact location of underground features cannot be accurately, completely and reliably depicted *without excavation*. Where additional or more detailed information is required, client is advised that excavation may be necessary. It is the excavator's responsibility to have any utilities marked before digging.

2. Water lines depicted by dashed lines hereon, are as shown on supplied Kansas City Board of Public Utilities map. They are representational only and are in no way intended to show their exact location, nor is this information to be construed as a complete inventory of all utilities at this location. The exact location of underground features cannot be accurately, completely and reliably depicted *without excavation*. Where additional or more detailed information is required, client is advised that excavation may be necessary. It is the excavator's responsibility to have any utilities marked before digging.

CONTROL POINT TIES

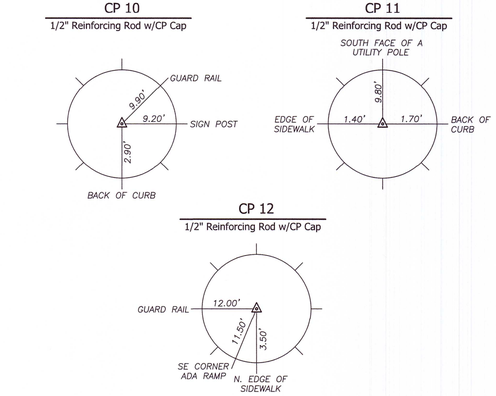

PROJECT CONTROL TABLE
(NAD83 KANSAS STATE PLANE, NORTH ZONE, US SURVEY FOOT)

POINT NO.	CONTROL POINT/ BENCHMARK DESCRIPTION	NORTHING COORDINATE	EASTING COORDINATE	ELEV.
10	1/2" REINFORCING ROD W/CP CAP	287188.35	2261650.89	767.71'
11	1/2" REINFORCING ROD W/CP CAP	287130.81	2261184.79	756.49'
12	1/2" REINFORCING ROD W/CP CAP	286933.08	2261742.04	787.15'

MATTHEW B. SCHEPMANN
LICENSED
07/02/2025
PS-1639
KANSAS
LAND SURVEYOR

matthew.schepmann@bhc.com

REV	DATE	DESCRIPTION	BY

BHC
712 State Avenue, Kansas City, KS 66101
Phone: (913) 371-5300

PREPARED BY:

©2025 McDonald's USA, LLC

PREPARED FOR: McDonald's USA, LLC

These drawings and specifications are the confidential and proprietary property of McDonald's USA, LLC and shall not be reproduced in whole or in part without written authorization. The contract documents were prepared for use on this specific site in conjunction with its issue date and are not suitable for use on other properties or at a later date. Use of these drawings for reference or example on another project requires the services of properly licensed architects and engineers. Reproduction of the contract documents for reuse on another project is not authorized.

DRAWN BY: GJW
STD ISSUE DATE: 2025/06/30
REVIEWED BY: MBS
DATE ISSUED: 2025/07/02

TITLE: KANSAS CITY, KS
ALTA/NSPS SURVEY

DESCRIPTION: ALTA SURVEY

SITE ID: 015-0400
SITE ADDRESS: 2320 METROPOLITAN AVE, KANSAS CITY, KS 66106

SHEET NO. 2 OF 2

BE# 250004-2

DEMO NOTES:

1. SAWCUT & REMOVE ALL PAVEMENT TO FULL DEPTH OF SLAB.
2. PROTECT ALL TREES NOT CALLED OUT FOR REMOVAL WITH ORANGE CONSTRUCTION FENCE AT THE DRIP LINE.
3. PAVEMENT STRIPING CALLED OUT FOR REMOVAL SHALL BE SANDBLASTED. NO GRINDING WILL BE ALLOWED.

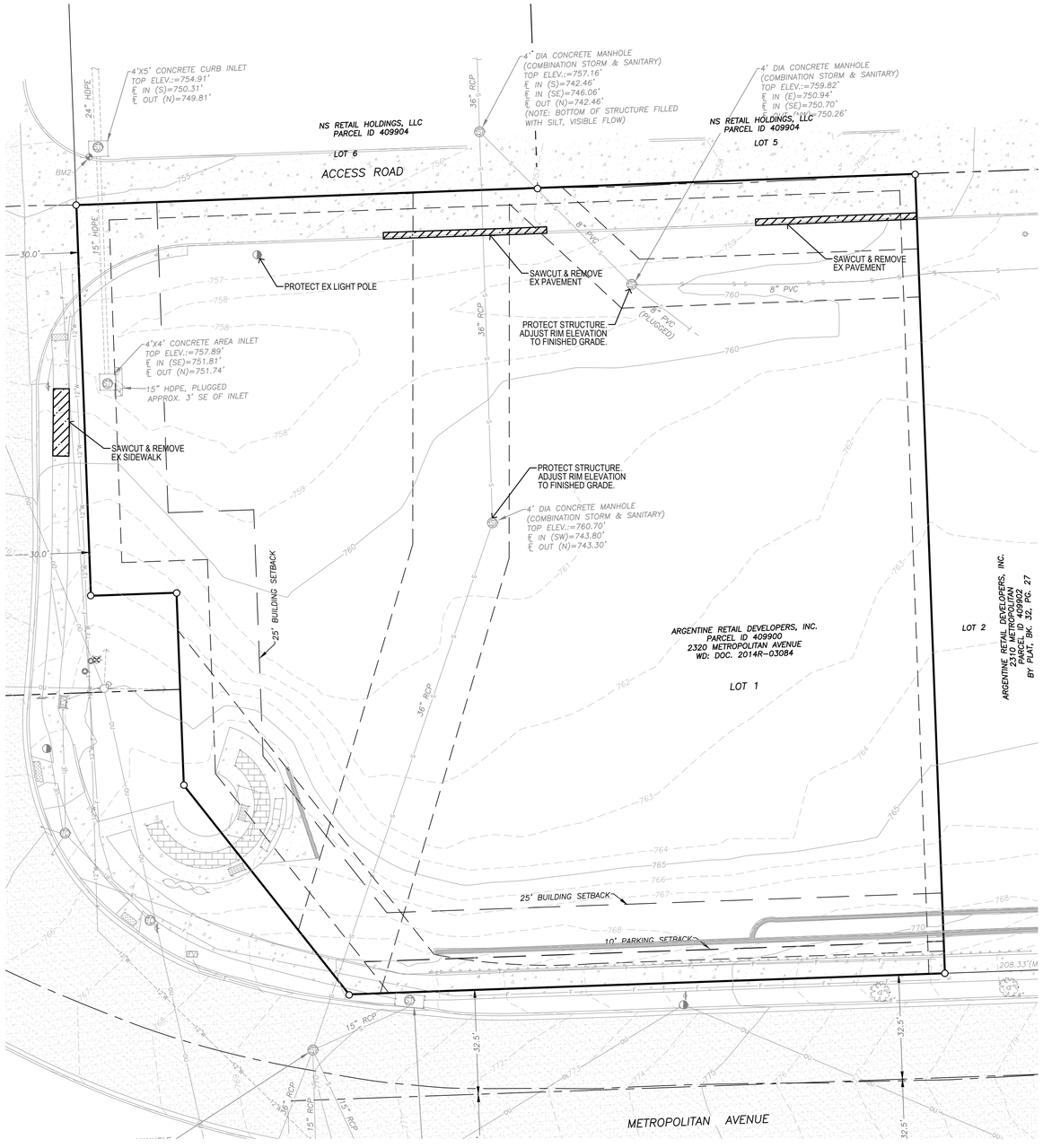

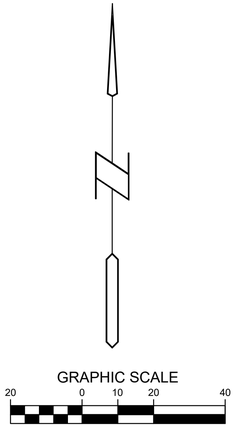

REV	DATE	DESCRIPTION	BY
0	12/1/2025	PERMIT SET	JEJ

SEAL

DAVID B BENTZ
LICENSED
27078
KANSAS
PROFESSIONAL ENGINEER

DATE: 12/1/2025

BISHOP ENGINEERING +
3501 104th Street, Urbandale, IA 50322 Ph: 515-276-0467

PREPARED BY:

PREPARED FOR:
McDonald's USA, LLC

© 2025 McDonald's USA, LLC
There drawings and specifications are the confidential and proprietary property of McDonald's USA, LLC and shall not be copied or reproduced without written authorization. The contract documents were prepared for use on this specific site in conjunction with its issue date and are not suitable for use on other projects or at other locations. Reproduction of these drawings for reference or example on another project requires the services of properly licensed architects and engineers. Reproduction of the contract documents for reuse on another project is not authorized.

DRAWN BY	CLT
STD ISSUE DATE	12-1-2025
REVIEWED BY	JEJ
DATE ISSUED	12-1-2025

TITLE: KANSAS CITY SITE PLAN

DESCRIPTION: DEMO PLAN

SITE ID: 140405

SITE ADDRESS: 2320 METROPOLITAN AVE, KANSAS CITY, KS 66106

SHEET NO. C1.1

BE #250004-2

12/1/2025 11:57:28 AM \\BE-FS01\PROJECTS\LAND PROJECTS 2025\250004-2 MCDONALD'S - KANSAS CITY, KS - METROPOLITAN AVE - WEST SITE\DWG\C1 DEMO.DWG

GENERAL NOTES:

1. ALL DIMENSION ARE TO BACK OF CURB UNLESS NOTED OTHERWISE.

DIRECTIONAL SIGN NOTES:

1. NEW OR REPLACED DIRECTIONAL SIGNS ARE NOT APPROVED BY THE JURISDICTION AS PART OF THIS PLAN SET.
2. CONTRACTOR SHALL COORDINATE WITH OWNER/OPERATOR AND MCDONALD'S CONSTRUCTION MANAGER FOR DIRECTIONAL SIGN TYPE.
3. IF EXISTING BOLT PATTERN ON EXISTING SIGN BASE WORKS WITH THE NEW SIGN AND THE BOLTS ARE LONG ENOUGH, THE CONTRACTOR MAY INSTALL NEW SIGNS ON THE EXISTING BASE.
4. IF THE BOLT PATTERN ON THE EXISTING SIGN BASE DOES NOT MATCH OR IF THE BOLTS ARE NOT LONG ENOUGH FOR THE BOLTS TO BE DOUBLE NUTTED, THE CONTRACTOR SHALL REMOVE THE EXISTING BASE AND INSTALL A NEW BASE PER THE DETAIL SHOWN ON SHEET C2.4. NO RETROFIT BASES WILL BE ALLOWED.

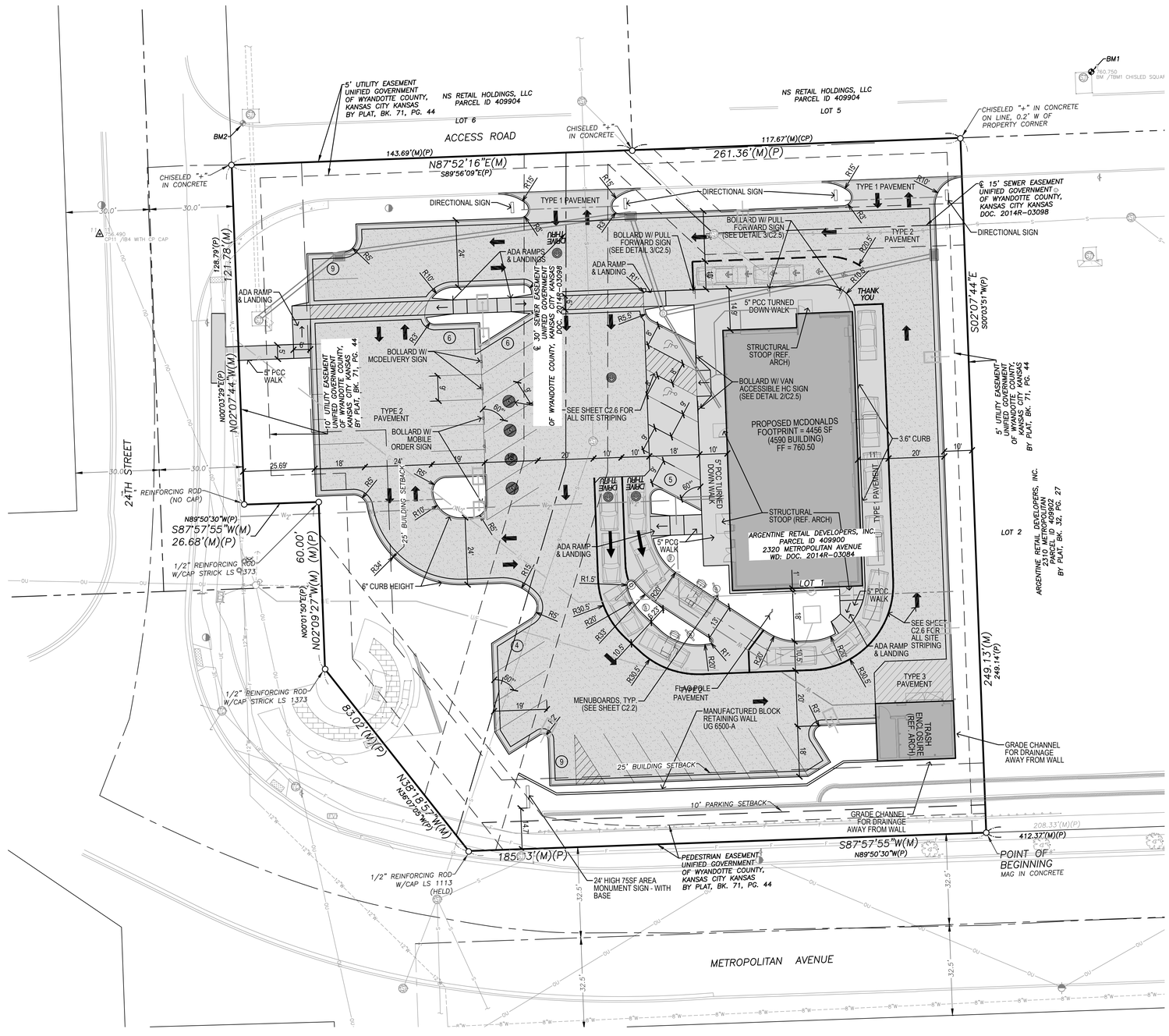

REV	DATE	DESCRIPTION	BY
0	12/1/2025	PERMIT SET	JEJ

SEAL

DAVID B BENTZ LICENSED 27078 KANSAS PROFESSIONAL ENGINEER

DATE: 12/1/2025

PREPARED BY:

BISHOP ENGINEERING +
3501 104th Street, Urbandale, IA 50322 Ph: 515-276-0467

PREPARED FOR:

McDonald's USA, LLC

© 2025 McDonald's USA, LLC

These drawings and specifications are the confidential and proprietary property of McDonald's USA, LLC and shall not be copied or reproduced without written authorization. The contract documents were prepared for use on this specific site in conjunction with its issue date and are not suitable for use on another site. Reproduction of these drawings for reference or example on another project requires the services of properly licensed architects and engineers. Reproduction of the contract documents for reuse on another project is not authorized.

DRAWN BY	CLT
STD ISSUE DATE	12-1-2025
REVIEWED BY	JEJ
DATE ISSUED	12-1-2025

TITLE: KANSAS CITY SITE PLAN

DESCRIPTION: LAYOUT PLAN

SITE ID: 140405

SITE ADDRESS: 2320 METROPOLITAN AVE, KANSAS CITY, KS 66106

SHEET NO. C2.1

BE #250004-2

12/1/2025 11:59:48 AM \\BE-FS01\PROJECTS2\LAND PROJECTS 2025\250004-2 MCDONALD'S - KANSAS CITY, KS - METROPOLITAN AVE - WEST SITE\DWG\C2 LAYOUT.DWG

COD CONSTRUCTION NOTES:

(A) NEW CONCRETE CURB AND GUTTER SEE SHEET C2.1. MATCH AND BLEND NEW CURB AND GUTTER INTO EXISTING. WHERE OCCURS.

(B) INSTALL NEW MENU BOARD. SEE SHEET C2.3 FOR FOUNDATION DETAIL, SHEET C2.5 FOR SCHEMATIC DETAIL AND SEE MANUFACTURER FOR INSTALLATION INSTRUCTIONS. THE ANGLE OF THE MENUBOARD TO THE CURB SHALL BE BETWEEN 25° AND 35° (35° PREFERRED). THE EDGE OF THE MENUBOARD SHALL BE TARGETED AT 18" TO THE FACE OF CURB, AND INSTALLED 12"-18" TO THE FACE OF CURB BASED ON SITE CONDITIONS. IF 12" CANNOT BE MAINTAINED, CONTRACTOR SHALL COORDINATE WITH ECM AND O/O FOR POSSIBLE INSTALLATION OF A PROTECTIVE BOLLARD AT O/O'S EXPENSE. THE CENTER OF THE MENUBOARD FOUNDATION SHALL BE 5'-9" FROM THE CENTER OF THE CANOPY (5'-0" MIN AND 6'-0" MAX).

(C) PRIMARY LANE ORDER HERE CANOPY. LOCATE 105'± FROM ℄ OF CANOPY TO ℄ OF CASH WINDOW MEASURED ALONG ℄ OF TRAVEL PATH AND FOOTING TIGHT AGAINST THE BACK OF CURB. SEE SHEET C2.3 FOR FOUNDATION DETAIL, SHEET C2.5 FOR SCHEMATIC DETAIL AND MANUFACTURER FOR INSTALLATION INSTRUCTIONS.

(D) SECONDARY LANE ORDER HERE CANOPY. LOCATE 14'-0" FROM NOSE OF CONCRETE ISLAND AND FOOTING TIGHT AGAINST THE BACK OF CURB. SEE SHEET C2.3 FOR FOUNDATION DETAIL, SHEET C2.5 FOR SCHEMATIC DETAIL AND MANUFACTURER FOR INSTALLATION INSTRUCTIONS.

(E) INSTALL PRIMARY LANE DETECTOR LOOP. SEE DETAIL SHEET C2.4.

(F) INSTALL SECONDARY LANE DETECTOR LOOP 2'-0" FORWARD OF ℄ OF COD. FLIP LOOP FORWARD. SEE DETAIL SHEET C2.4.

(G) DOUBLE ARM GATEWAY SIGN. EDGE OF THE FOOTING OF THE GATEWAY SIGN SHALL BE TIGHT AGAINST THE BACK OF CURB. SEE SHEET C2.3 FOR FOUNDATION DETAIL, SHEET C2.5 FOR SCHEMATIC DETAIL AND MANUFACTURER FOR INSTALLATION INSTRUCTIONS.

(H) LANDSCAPED AREA.

(I) ANY LANE ANY TIME SIGN. ATTACH SIGN TO GATEWAY 6' FROM BOTTOM OF POST. SEE SHEET C2.5 FOR SCHEMATIC DETAIL AND MANUFACTURER FOR INSTALLATION INSTRUCTIONS.

(J) PRIMARY LANE PRE-BROWSE BOARD. SEE SHEET C2.3 FOR FOUNDATION DETAIL, C2.5 FOR SCHEMATIC DETAIL, AND MANUFACTURER FOR INSTALLATION INSTRUCTIONS. BOARD SHALL BE LOCATED 15' FROM THE ℄ OF THE PRIMARY CANOPY TO THE ℄ OF THE PRE-BROWSE BOARD MEASURED ALONG THE FACE OF CURB. THE EDGE OF THE PRE-BROWSE BOARD SHALL BE TARGETED AT 18" TO THE FACE OF CURB AND INSTALLED 12" MINIMUM BASED ON SITE CONDITIONS. IF 12" CANNOT BE MAINTAINED, CONTRACTOR SHALL COORDINATE WITH ECM AND O/O FOR POSSIBLE INSTALLATION OF A PROTECTIVE BOLLARD AT O/O'S EXPENSE. THE ANGLE OF THE MENUBOARD TO THE CURB SHALL BE TARGETED AT 50°.

(K) SECONDARY LANE PRE-BROWSE BOARD. SEE SHEET C2.3 FOR FOUNDATION DETAIL, C2.5 FOR SCHEMATIC DETAIL, AND MANUFACTURER FOR INSTALLATION INSTRUCTIONS. BOARD SHALL BE LOCATED 15' FROM THE ℄ OF THE SECONDARY CANOPY TO THE ℄ OF THE PRE-BROWSE BOARD MEASURED ALONG THE FACE OF CURB. THE EDGE OF THE PRE-BROWSE BOARD SHALL BE TARGETED AT 18" TO THE FACE OF CURB AND INSTALLED 12" MINIMUM BASED ON SITE CONDITIONS. IF 12" CANNOT BE MAINTAINED, CONTRACTOR SHALL COORDINATE WITH ECM AND O/O FOR POSSIBLE INSTALLATION OF A PROTECTIVE BOLLARD AT O/O'S EXPENSE. THE ANGLE OF THE MENUBOARD TO THE CURB SHALL BE TARGETED AT 35°.

(L) INSTALL DETECTOR LOOPS AT CASH AND PRESENT WINDOWS. SEE DETAIL 1 SHEET C2.4.

(M) INSTALL ROLL FORWARD SIGN & BOLLARD. SEE DETAIL 3 SHEET C2.5

(N) INSTALL COVER ON EXISTING BOLLARD TO MATCH BUILDING BASE. FOR COVER CONTACT:
PUGLESEA COMPANY
ATTN: BRAD ERICKSON
1253 CONNELLY AVE
ARDEN HILLS, MN 55112
PH: (651) 636-6442

GENERAL NOTES:

1. SIGNAGE & DRIVE-THRU ELEMENTS:
   COD, DRIVE-THRU PYLON/CLEARANCE POLE, BOLLARD SIGN, AND FREESTANDING MERCHANDIZER SHALL BE CONSISTENT WITH THE MCDONALD'S CURRET STANDARDS FOR DRIVE-THRU ELEMENTS. OTHER DESIGNS MAY NOT BE USED.
2. GENERAL CONTRACTOR SHALL COORDINATE WITH CIVIL PLANS, MCDONALD'S PROJECT MANAGER, AND SIGNAGE SUPPLIER TO DETERMINE THE EXACT LOCATION, ORIENTATION, MOUNTING HEIGHTS, AND NUMBER OF SIGNS AND OTHER DRIVE-THRU ELEMENTS TO BE INSTALLED AT THIS SITE. ALL WORK SHALL BE COORDINATED WITH OTHER TRADES.
3. CONTACT MCDONALD'S PROJECT MANAGER FOR SIGNAGE & DRIVE-THRU ELEMENT FOOTING AND WIRING REQUIREMENTS. SIGNAGE MANUFACTURER TO PROVIDE FOOTING ANCHORS & TEMPLATES TO G.C. PRIOR TO FOUNDATION POURING.
4. SEE SHEET C2.5 AND ELECTRICAL SHEETS FOR DRIVE-THRU WIRING INFORMATION.
5. GENERAL CONTRACTOR TO COORDINATE THE RESPONSIBILITES OF THE ELECTRICAL CONTRACTOR AND THE SIGN SUPPLIER.
6. GENERAL CONTRACTOR TO INSTALL PRE-FORMED, PRE-WIRED VEHICLE DETECTOR LOOP.
7. GENERAL CONTRACTOR SHALL VERIFY CONDUIT SIZES REQUIRED BY VEHICLE LOOP DETECTOR SUPPLIER.

COD LAYOUT NOTES:

1. ALL DIMENSIONS ARE TO BACK OF CURB UNLESS NOTED OTHERWISE ON PLAN.
2. FIELD VERIFY AND CONFIRM EXISTING CONDITIONS AND DIMENSIONS PRIOR TO COMMENCING CONSTRUCTION. NOTIFY MCDONALD'S PROJECT MANAGER OF ANY DISCREPANCIES PRIOR TO COMMENCING CONSTRUCTION.
3. SEE SHEET C2.1 FOR ALL SITE DIMENSIONS.
4. SEE SHEET C2.6 FOR STRIPING.

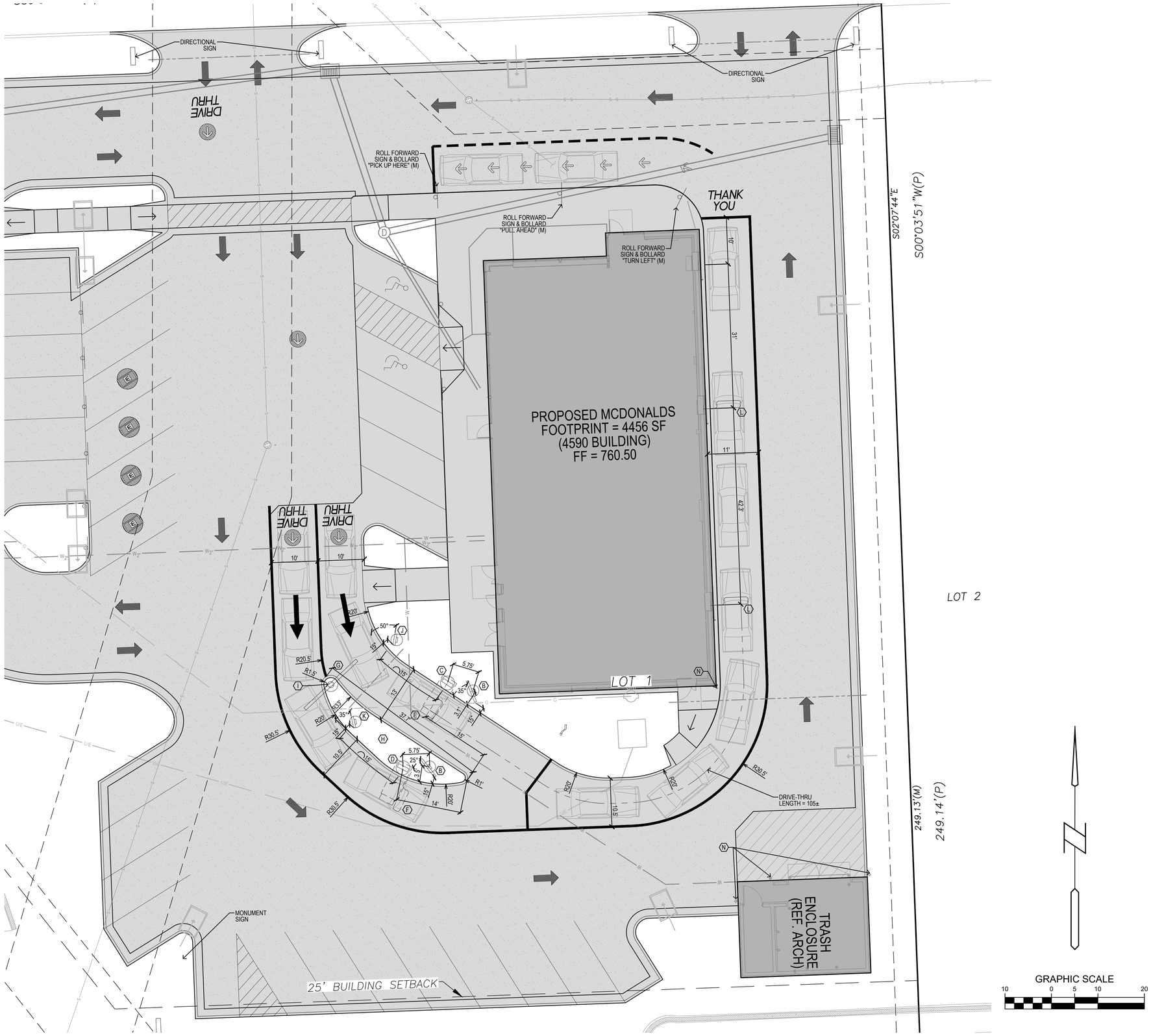

REV	DATE	DESCRIPTION	BY
0	12/1/2025	PERMIT SET	JEJ

SEAL

DAVID B BENTZ LICENSED 27078 KANSAS PROFESSIONAL ENGINEER

DATE: 12/1/2025

PREPARED BY:

BISHOP ENGINEERING +
3501 104th Street, Urbandale, IA 50322 Ph: 515-276-0467

PREPARED FOR:

McDonald's USA, LLC

© 2025 McDonald's USA, LLC

These drawings and specifications are the confidential and proprietary property of McDonald's USA, LLC and shall not be copied or reproduced without written authorization. The contract documents were prepared for use on this specific site in conjunction with its issue date and are not suitable for use on other sites or with later revisions. Reproduction of these drawings for reference or example on another project requires the services of properly licensed architects and engineers. Reproduction of the contract documents for reuse on another project is not authorized.

DRAWN BY	CLT
STD ISSUE DATE	12-1-2025
REVIEWED BY	JEJ
DATE ISSUED	12-1-2025

TITLE: KANSAS CITY SITE PLAN

DESCRIPTION: COD LAYOUT PLAN

SITE ID: 1.40405

SITE ADDRESS: 2320 METROPOLITAN AVE. KANSAS CITY, KS 66106

SHEET NO. C2.2

BE #250004-2

12/1/2025 11:59:51 AM \\BE-FS01\PROJECTS\ZLAND PROJECTS 2025\250004-2 MCDONALD'S - KANSAS CITY, KS - METROPOLITAN AVE - WEST SITE\DWG\C2 LAYOUT.DWG

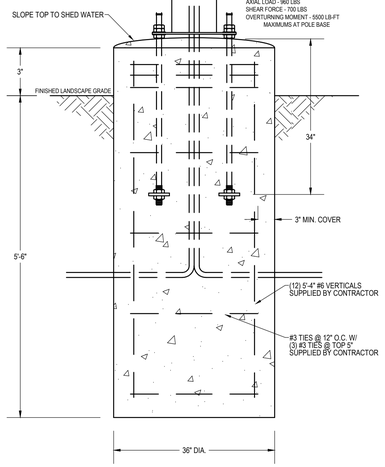

1 C2.3 DOUBLE GATEWAY FOUNDATION - 100 MPH NTS

NOTES:
-TOP OF PIERS SHALL BE SLOPED SUCH THAT MOISTURE CANNOT ACCUMULATE.
-HOT DIPPED GALVANIZED BOLTS
-F1554 GRADE 36 ANCHOR BOLTS
-ANCHOR BOLTS TO BE SET IN ACCORDANCE WITH AISC CODE OF STANDARD PRACTICE.
-ANCHOR RODS, NUTS, AND WASHERS SHALL BE SHIPPED AS AN ASSEMBLY FROM THE SIGNLIGHTING MANUFACTURER.
-DO NOT CUT ANCHOR BOLTS AFTER INSTALLATION OF POLE

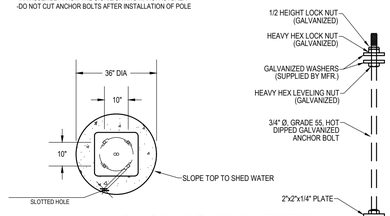

A ANCHOR BOLT PATTERN NTS

NOTES:
-TOP OF PIERS SHALL BE SLOPED SUCH THAT MOISTURE CANNOT ACCUMULATE.
-ANCHOR RODS, NUTS, AND WASHERS SHALL BE SHIPPED AS AN ASSEMBLY FROM THE SIGNLIGHTING MANUFACTURER
-DO NOT CUT ANCHOR BOLTS AFTER INSTALLATION OF POLE

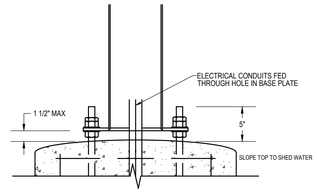

B CONNECTION DETAILS NTS

GENERAL NOTES

-THE FOLLOWING CODES WERE USED IN DESIGN:
-IBC 2012
-ASCE 7-10
-ACI 318-14
-AISC 14th EDITION
-AWS D1.1
-WIND SPEED 100 MPH (3 SEC GUST)
-EXPOSURE C
-DESIGN LOADS DERIVED FROM THESE CODES AND FORCES
-AXIAL - 960#
-SHEAR - 700#
-MOMENT - 5,500#'

-ALL FOOTING EXCAVATIONS ARE TO BE CLEAR OF WATER AND FOREIGN MATTER BEFORE PLACING CONCRETE
-MINIMUM ALLOWABLE LATERAL SOIL BEARING PRESSURE OF 100PSF/FT (x2)
-SITE SOIL CONDITIONS TO BE CONFIRMED BY GEOTECHNICAL ENGINEER. IF ASSUMED SOIL CONDITIONS ARE NOT PRESENT, FOUNDATION SHALL BE DESIGNED BY A LICENSED STRUCTURAL ENGINEER TAKING INTO ACCOUNT ACTUAL SITE SOIL CONDITIONS.
-TOP 9" OF SOIL NEGLECTED IN EMBEDMENT DEPTH CALCULATIONS (EMBEDMENT DEPTHS SHOWN ARE FROM GRADE)
-ELECTRICAL CONTRACTOR TO PROVIDE INFORMATION ON CONDUIT AND ELECTRICAL REQUIREMENTS.

CONCRETE:
-ALL FOOTINGS SHALL BEAR ON FIRM UNDISTURBED RESIDUAL SOIL AND/OR ENGINEERED EARTH FILL COMPACTED TO 98% OF ITS MAXIMUM DRY DENSITY AS PER ASTM D 698-70 (STANDARD PROCTOR) UNLESS NOTED OTHERWISE.
-ALL PIERS TO EXTEND TO FROST DEPTH AS DETERMINED BY LOCAL JURISDICTION.
-TOP OF PIERS SHALL BE SLOPED SUCH THAT MOISTURE CANNOT ACCUMULATE.
-MINIMUM CONCRETE STRENGTH (f'c=3,000 PSI) SHALL CONFORM WITH MCDONALDS CAST-IN-PLACE CONCRETE SPECIFICATIONS SECTION 2.13-A
-USE OF ADMIXTURES SHALL CONFORM TO MCDONALDS CAST-IN-PLACE CONCRETE SPECIFICATION SECTION 2.6
-AIR ENTRAINMENT SHALL CONFORM WITH MCDONALDS CAST-IN-PLACE CONCRETE SPECIFICATION SECTIONS 2.6-A & 2.13-A
-WATER CONTENT RATIO SHALL CONFORM TO MCDONALDS CAST-IN-PLACE CONCRETE SPECIFICATIONS SECTION 2.13-A
-FOUNDATION CONCRETE TO BE TESTED PER MCDONALDS CAST-IN-PLACE CONCRETE SPECIFICATIONS SECTION 3.14
-PROVIDE A MINIMUM 3" OF CONCRETE COVER OVER ALL EMBEDDED STEEL.
-REINFORCEMENT PLACEMENT SHALL CONFORM TO MCDONALDS CAST-IN-PLACE CONCRETE SPECIFICATIONS SECTIONS 3.2 & 3.5. PERFORMED BY GENERAL CONTRACTOR.
-ANCHOR BOLTS TO BE SET IN ACCORDANCE WITH AISC CODE OF STANDARD PRACTICE
-DO NOT PLACE POLES ON CONCRETE UNTIL CONCRETE HAS CURED PER MCDONALDS CAST-IN-PLACE CONCRETE SPECIFICATION, SECTION 3.11-E.

STEEL:
-STEEL PIPE SECTION: ASTM A53 OR A252 TYPE E GRADE B (Fy = 35ksi)
-HSS ROUND SECTION: ASTM A500 GRADE B (Fy = 42ksi)
-HSS SQUARE/RECTANGULAR SECTIONS: ASTM A500 GRADE B (Fy = 46ksi)
-CONNECTION BOLTS A325
-STEEL ANGLES, CHANNELS, STRUCTURAL SHAPES AND PLATES: ASTM A36
-REINFORCEMENT: ASTM A615 GRADE 60 - BY GENERAL CONTRACTOR
-NUTS: A563DH OR A194-2H
-WASHERS: ASTM A36
-USE ASTM A153 CLASS C HOT DIPPED GALVANIZED BOLTS AND FASTENERS.
-ANCHOR RODS, NUTS, AND WASHERS SHALL BE SHIPPED AS AN ASSEMBLY FROM THE SIGNLIGHTING MANUFACTURER.
-NO FIELD HEATING TO BEND STEEL SHALL BE ALLOWED WITHOUT ENGINEER'S APPROVAL.
-DO NOT CUT ANCHOR RODS AFTER INSTALLATION OF POLE.
-AFTER INSTALLATION, ALL EXPOSED STEEL SHALL BE PAINTED WITH AN ENAMEL PAINT TO INHIBIT CORROSION.
-ANY FIELD WELDING SHALL FIRST BE VERIFIED BY ENGINEER AND PERFORMED IN ACCORDANCE WITH AWS D1.1.

-REFER TO SIGN MANUFACTURER DRAWINGS AND INSTRUCTIONS FOR ADDITIONAL INFORMATION.
-CONTRACTOR (INSTALLER) IS RESPONSIBLE FOR THE MEANS AND METHODS OF CONSTRUCTION IN REGARDS TO JOBSITE SAFETY.
-DETAILS AND STRUCTURAL MEMBERS NOT SHOWN DESIGNED BY OTHERS
-ANY MODIFICATIONS ARE TO BE VERIFIED BY AN ENGINEER.

REVISION DATE: 5/11/2017

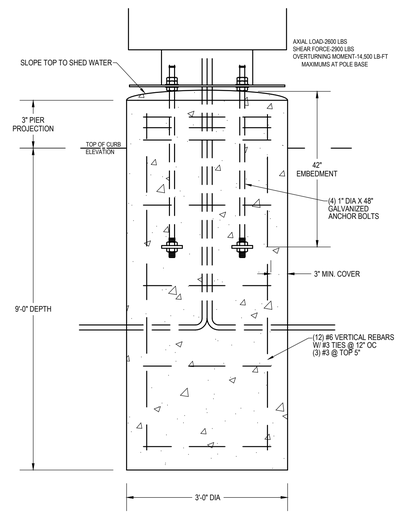

2 C2.3 ORDER HERE CANOPY FOUNDATION - 100 MPH NTS

NOTES:
-TOP OF PIERS SHALL BE SLOPED SUCH THAT MOISTURE CANNOT ACCUMULATE.
-USE F1554 GRADE 36 BOLTS MINIMUM
-USE HOT DIPPED GALVANIZED BOLTS
-ANCHOR BOLTS TO BE SET IN ACCORDANCE WITH AISC CODE OF STANDARD PRACTICE
-ANCHOR RODS, NUTS, AND WASHERS SHALL BE SHIPPED AS AN ASSEMBLY FROM THE SIGNLIGHTING MANUFACTURER
-DO NOT CUT ANCHOR BOLTS AFTER INSTALLATION OF POLE

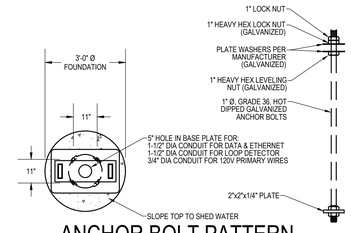

A ANCHOR BOLT PATTERN NTS

NOTES:
-TOP OF PIERS SHALL BE SLOPED SUCH THAT MOISTURE CANNOT ACCUMULATE.
-ANCHOR RODS, NUTS, AND WASHERS SHALL BE SHIPPED AS AN ASSEMBLY FROM THE SIGNLIGHTING MANUFACTURER
-DO NOT CUT ANCHOR BOLTS AFTER INSTALLATION OF POLE

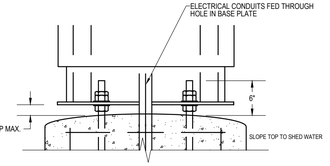

B CONNECTION DETAILS NTS

GENERAL NOTES

-THE FOLLOWING CODES WERE USED IN DESIGN:
-IBC 2012
-ASCE 7-10
-ACI 318-14
-AISC 14th EDITION
-AWS D1.1
-WIND SPEED 100 MPH (3 SEC GUST)
-EXPOSURE C
-DESIGN LOADS DERIVED FROM THESE CODES AND FORCES
-AXIAL - 2,600#
-SHEAR - 2,900#
-MOMENT - 14,500#'

-ALL FOOTING EXCAVATIONS ARE TO BE CLEAR OF WATER AND FOREIGN MATTER BEFORE PLACING CONCRETE
-MINIMUM ALLOWABLE LATERAL SOIL BEARING PRESSURE OF 100PSF/FT (x2)
-SITE SOIL CONDITIONS TO BE CONFIRMED BY GEOTECHNICAL ENGINEER. IF ASSUMED SOIL CONDITIONS ARE NOT PRESENT, FOUNDATION SHALL BE DESIGNED BY A LICENSED STRUCTURAL ENGINEER TAKING INTO ACCOUNT ACTUAL SITE SOIL CONDITIONS.
-TOP 9" OF SOIL NEGLECTED IN EMBEDMENT DEPTH CALCULATIONS (EMBEDMENT DEPTHS SHOWN ARE FROM GRADE)
-ELECTRICAL CONTRACTOR TO PROVIDE INFORMATION ON CONDUIT AND ELECTRICAL REQUIREMENTS.

CONCRETE:
-ALL FOOTINGS SHALL BEAR ON FIRM UNDISTURBED RESIDUAL SOIL AND/OR ENGINEERED EARTH FILL COMPACTED TO 98% OF ITS MAXIMUM DRY DENSITY AS PER ASTM D 698-70 (STANDARD PROCTOR) UNLESS NOTED OTHERWISE.
-ALL PIERS TO EXTEND TO FROST DEPTH AS DETERMINED BY LOCAL JURISDICTION.
-TOP OF PIERS SHALL BE SLOPED SUCH THAT MOISTURE CANNOT ACCUMULATE.
-MINIMUM CONCRETE STRENGTH (f'c=3,000 PSI) SHALL CONFORM WITH MCDONALDS CAST-IN-PLACE CONCRETE SPECIFICATIONS SECTION 2.13-A
-USE OF ADMIXTURES SHALL CONFORM TO MCDONALDS CAST-IN-PLACE CONCRETE SPECIFICATION SECTION 2.6
-AIR ENTRAINMENT SHALL CONFORM WITH MCDONALDS CAST-IN-PLACE CONCRETE SPECIFICATION SECTIONS 2.6-A & 2.13-A
-WATER CONTENT RATIO SHALL CONFORM TO MCDONALDS CAST-IN-PLACE CONCRETE SPECIFICATIONS SECTION 2.13-A
-FOUNDATION CONCRETE TO BE TESTED PER MCDONALDS CAST-IN-PLACE CONCRETE SPECIFICATIONS SECTION 3.14
-PROVIDE A MINIMUM 3" OF CONCRETE COVER OVER ALL EMBEDDED STEEL.
-REINFORCEMENT PLACEMENT SHALL CONFORM TO MCDONALDS CAST-IN-PLACE CONCRETE SPECIFICATIONS SECTIONS 3.2 & 3.5. PERFORMED BY GENERAL CONTRACTOR.
-ANCHOR BOLTS TO BE SET IN ACCORDANCE WITH AISC CODE OF STANDARD PRACTICE
-DO NOT PLACE POLES ON CONCRETE UNTIL CONCRETE HAS CURED PER MCDONALDS CAST-IN-PLACE CONCRETE SPECIFICATION, SECTION 3.11-E.

STEEL:
-STEEL PIPE SECTION: ASTM A53 OR A252 TYPE E GRADE B (Fy = 35ksi)
-HSS ROUND SECTION: ASTM A500 GRADE B (Fy = 42ksi)
-HSS SQUARE/RECTANGULAR SECTIONS: ASTM A500 GRADE B (Fy = 46ksi)
-CONNECTION BOLTS A325
-STEEL ANGLES, CHANNELS, STRUCTURAL SHAPES AND PLATES: ASTM A36
-REINFORCEMENT: ASTM A615 GRADE 60 - BY GENERAL CONTRACTOR
-NUTS: A563DH OR A194-2H
-WASHERS: ASTM A36
-USE ASTM A153 CLASS C HOT DIPPED GALVANIZED BOLTS AND FASTENERS.
-ANCHOR RODS, NUTS, AND WASHERS SHALL BE SHIPPED AS AN ASSEMBLY FROM THE SIGNLIGHTING MANUFACTURER.
-NO FIELD HEATING TO BEND STEEL SHALL BE ALLOWED WITHOUT ENGINEER'S APPROVAL.
-DO NOT CUT ANCHOR RODS AFTER INSTALLATION OF POLE.
-AFTER INSTALLATION, ALL EXPOSED STEEL SHALL BE PAINTED WITH AN ENAMEL PAINT TO INHIBIT CORROSION.
-ANY FIELD WELDING SHALL FIRST BE VERIFIED BY ENGINEER AND PERFORMED IN ACCORDANCE WITH AWS D1.1.

-REFER TO SIGN MANUFACTURER DRAWINGS AND INSTRUCTIONS FOR ADDITIONAL INFORMATION.
-CONTRACTOR (INSTALLER) IS RESPONSIBLE FOR THE MEANS AND METHODS OF CONSTRUCTION IN REGARDS TO JOBSITE SAFETY.
-FOUNDATIONS ARE DESIGNED FOR SINGLE OR DOUBLE POLE COLUMNS
-DETAILS AND STRUCTURAL MEMBERS NOT SHOWN DESIGNED BY OTHERS
-ANY MODIFICATIONS ARE TO BE VERIFIED BY AN ENGINEER.

REVISION DATE: 5/11/2017

FOUNDATION NOTES:
-PIER DEPTHS REQUIRED ARE MINIMUMS. ALL PIERS TO EXTEND TO FROST DEPTH AS DETERMINED BY LOCAL JURISDICTION.
-TOP OF PIERS SHALL BE SLOPED SUCH THAT MOISTURE CANNOT ACCUMULATE.
-MINIMUM ALLOWABLE LATERAL SOIL BEARING PRESSURE 100 PSF/FT OF DEPTH (x2)
-ALL REINFORCING STEEL BY GENERAL CONTRACTOR

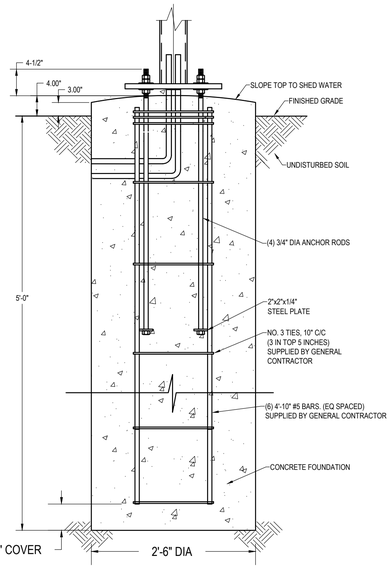

3 C2.3 OUTDOOR DIGITAL MENUBOARD FOUNDATION-90 MPH NTS

NOTES:
-TOP OF PIERS SHALL BE SLOPED SUCH THAT MOISTURE CANNOT ACCUMULATE.
-ANCHOR RODS, NUTS, AND WASHERS SHALL BE SHIPPED AS AN ASSEMBLY FROM THE SIGNLIGHTING MANUFACTURER

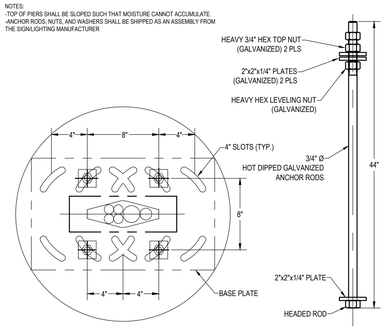

A ANCHOR BOLT PATTERN NTS

NOTES:
-TOP OF PIERS SHALL BE SLOPED SUCH THAT MOISTURE CANNOT ACCUMULATE.
-ANCHOR RODS, NUTS, AND WASHERS SHALL BE SHIPPED AS AN ASSEMBLY FROM THE SIGNLIGHTING MANUFACTURER
-DO NOT CUT ANCHOR BOLTS AFTER INSTALLATION OF POLE

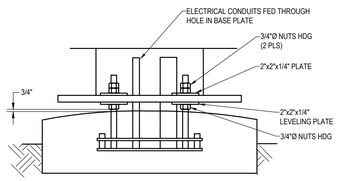

B CONNECTION DETAILS NTS

GENERAL NOTES

-THE FOLLOWING CODES WERE USED IN DESIGN:
-IBC 2012
-ASCE 7-10
-ACI 318-14
-AISC 14th EDITION
-AWS D1.1
-WIND SPEED 90 MPH (3 SEC GUST)
-EXPOSURE C
-DESIGN LOADS DERIVED FROM THESE CODES AND FORCES
-AXIAL - 550#
-SHEAR - 184#
-MOMENT - 764#'

-ALL FOOTING EXCAVATIONS ARE TO BE CLEAR OF WATER AND FOREIGN MATTER BEFORE PLACING CONCRETE
-MINIMUM ALLOWABLE LATERAL SOIL BEARING PRESSURE OF 100PSF/FT (x2)
-SITE SOIL CONDITIONS TO BE CONFIRMED BY GEOTECHNICAL ENGINEER. IF ASSUMED SOIL CONDITIONS ARE NOT PRESENT, FOUNDATION SHALL BE DESIGNED BY A LICENSED STRUCTURAL ENGINEER TAKING INTO ACCOUNT ACTUAL SITE SOIL CONDITIONS.
-TOP 9" OF SOIL NEGLECTED IN EMBEDMENT DEPTH CALCULATIONS (EMBEDMENT DEPTHS SHOWN ARE FROM GRADE)
-ELECTRICAL CONTRACTOR TO PROVIDE INFORMATION ON CONDUIT AND ELECTRICAL REQUIREMENTS.

CONCRETE:
-ALL FOOTINGS SHALL BEAR ON FIRM UNDISTURBED RESIDUAL SOIL AND/OR ENGINEERED EARTH FILL COMPACTED TO 98% OF ITS MAXIMUM DRY DENSITY AS PER ASTM D 698-70 (STANDARD PROCTOR) UNLESS NOTED OTHERWISE.
-ALL PIERS TO EXTEND TO FROST DEPTH AS DETERMINED BY LOCAL JURISDICTION.
-TOP OF PIERS SHALL BE SLOPED SUCH THAT MOISTURE CANNOT ACCUMULATE.
-MINIMUM CONCRETE STRENGTH (f'c=3,000 PSI) SHALL CONFORM WITH MCDONALDS CAST-IN-PLACE CONCRETE SPECIFICATIONS SECTION 2.13-A
-USE OF ADMIXTURES SHALL CONFORM TO MCDONALDS CAST-IN-PLACE CONCRETE SPECIFICATION SECTION 2.6
-AIR ENTRAINMENT SHALL CONFORM WITH MCDONALDS CAST-IN-PLACE CONCRETE SPECIFICATION SECTIONS 2.6-A & 2.13-A
-WATER CONTENT RATIO SHALL CONFORM TO MCDONALDS CAST-IN-PLACE CONCRETE SPECIFICATIONS SECTION 2.13-A
-FOUNDATION CONCRETE TO BE TESTED PER MCDONALDS CAST-IN-PLACE CONCRETE SPECIFICATIONS SECTION 3.14
-PROVIDE A MINIMUM 3" OF CONCRETE COVER OVER ALL EMBEDDED STEEL.
-REINFORCEMENT PLACEMENT SHALL CONFORM TO MCDONALDS CAST-IN-PLACE CONCRETE SPECIFICATIONS SECTIONS 3.2 & 3.5. PERFORMED BY GENERAL CONTRACTOR.
-ANCHOR BOLTS TO BE SET IN ACCORDANCE WITH AISC CODE OF STANDARD PRACTICE
-DO NOT PLACE POLES ON CONCRETE UNTIL CONCRETE HAS CURED PER MCDONALDS CAST-IN-PLACE CONCRETE SPECIFICATION, SECTION 3.11-E.

STEEL:
-STEEL PIPE SECTION: ASTM A53 OR A252 TYPE E GRADE B (Fy = 35ksi)
-HSS ROUND SECTION: ASTM A500 GRADE B (Fy = 42ksi)
-HSS SQUARE/RECTANGULAR SECTIONS: ASTM A500 GRADE B (Fy = 46ksi)
-HEADED ANCHOR RODS ASTM F1554 GR 55, AN ACCEPTABLE ALTERNATIVE IS ASTM F1554 GR 55, S1 WHEN THE EMBEDDED END OF THE ROD IS THREADED AND THE NUT TACK WELDED PRIOR TO GALVANIZATION.
-STEEL ANGLES, CHANNELS, STRUCTURAL SHAPES AND PLATES: ASTM A36
-REINFORCEMENT: ASTM A615 GRADE 60 - BY GENERAL CONTRACTOR
-NUTS: ASTM A563A, HEAVY HEX
-WASHERS: ASTM F844 A36
-USE ASTM A153 CLASS C HOT DIPPED GALVANIZED BOLTS AND FASTENERS.
-ANCHOR RODS, NUTS, AND WASHERS SHALL BE SHIPPED AS AN ASSEMBLY FROM THE SIGNLIGHTING MANUFACTURER.
-NO FIELD HEATING TO BEND STEEL SHALL BE ALLOWED WITHOUT ENGINEER'S APPROVAL.
-DO NOT CUT ANCHOR RODS AFTER INSTALLATION OF POLE.
-AFTER INSTALLATION, ALL EXPOSED STEEL SHALL BE PAINTED WITH AN ENAMEL PAINT TO INHIBIT CORROSION.
-ANY FIELD WELDING SHALL FIRST BE VERIFIED BY ENGINEER AND PERFORMED IN ACCORDANCE WITH AWS D1.1.

-REFER TO SIGN MANUFACTURER DRAWINGS AND INSTRUCTIONS FOR ADDITIONAL INFORMATION.
-CONTRACTOR (INSTALLER) IS RESPONSIBLE FOR THE MEANS AND METHODS OF CONSTRUCTION IN REGARDS TO JOBSITE SAFETY.
-DETAILS AND STRUCTURAL MEMBERS NOT SHOWN DESIGNED BY OTHERS
-ANY MODIFICATIONS ARE TO BE VERIFIED BY AN ENGINEER.

REVISION DATE: 4/19/2017

FOUNDATION NOTES:
-PIER DEPTHS REQUIRED ARE MINIMUMS. ALL PIERS TO EXTEND TO FROST DEPTH AS DETERMINED BY LOCAL JURISDICTION.
-TOP OF PIERS SHALL BE SLOPED SUCH THAT MOISTURE CANNOT ACCUMULATE.
-MINIMUM ALLOWABLE LATERAL SOIL BEARING PRESSURE 100 PSF/FT OF DEPTH (x2)
-ALL REINFORCING STEEL BY GENERAL CONTRACTOR

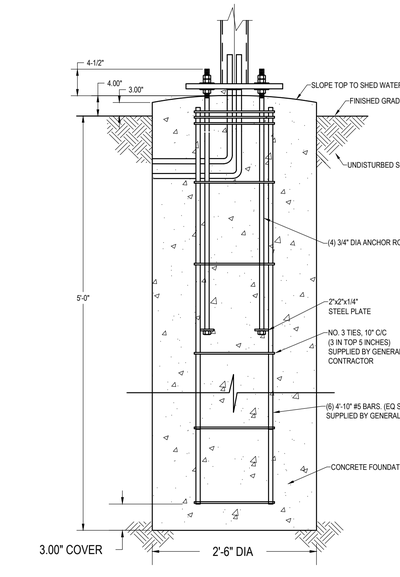

4 C2.3 DIGITAL PRE-BROWSE BOARD FOUNDATION-90 MPH NTS

NOTES:
-TOP OF PIERS SHALL BE SLOPED SUCH THAT MOISTURE CANNOT ACCUMULATE.
-ANCHOR RODS, NUTS, AND WASHERS SHALL BE SHIPPED AS AN ASSEMBLY FROM THE SIGNLIGHTING MANUFACTURER

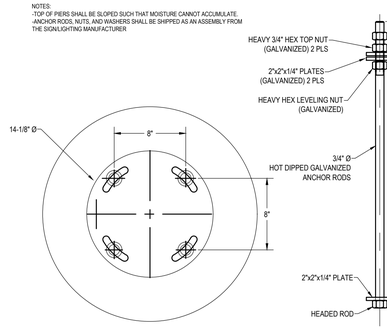

A ANCHOR BOLT PATTERN NTS

NOTES:
-TOP OF PIERS SHALL BE SLOPED SUCH THAT MOISTURE CANNOT ACCUMULATE.
-ANCHOR RODS, NUTS, AND WASHERS SHALL BE SHIPPED AS AN ASSEMBLY FROM THE SIGNLIGHTING MANUFACTURER
-DO NOT CUT ANCHOR BOLTS AFTER INSTALLATION OF POLE

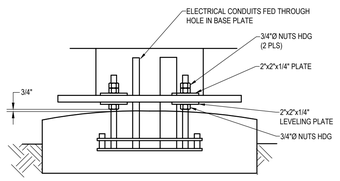

B CONNECTION DETAILS NTS

GENERAL NOTES

-THE FOLLOWING CODES WERE USED IN DESIGN:
-IBC 2012
-ASCE 7-10
-ACI 318-14
-AISC 14th EDITION
-AWS D1.1
-WIND SPEED 100 MPH (3 SEC GUST)
-EXPOSURE C
-DESIGN LOADS DERIVED FROM THESE CODES AND FORCES
-AXIAL - 2,600#
-SHEAR - 2,900#
-MOMENT - 14,500#'

-ALL FOOTING EXCAVATIONS ARE TO BE CLEAR OF WATER AND FOREIGN MATTER BEFORE PLACING CONCRETE
-MINIMUM ALLOWABLE LATERAL SOIL BEARING PRESSURE OF 100PSF/FT (x2)
-SITE SOIL CONDITIONS TO BE CONFIRMED BY GEOTECHNICAL ENGINEER. IF ASSUMED SOIL CONDITIONS ARE NOT PRESENT, FOUNDATION SHALL BE DESIGNED BY A LICENSED STRUCTURAL ENGINEER TAKING INTO ACCOUNT ACTUAL SITE SOIL CONDITIONS.
-TOP 9" OF SOIL NEGLECTED IN EMBEDMENT DEPTH CALCULATIONS (EMBEDMENT DEPTHS SHOWN ARE FROM GRADE)
-ELECTRICAL CONTRACTOR TO PROVIDE INFORMATION ON CONDUIT AND ELECTRICAL REQUIREMENTS.

CONCRETE:
-ALL FOOTINGS SHALL BEAR ON FIRM UNDISTURBED RESIDUAL SOIL AND/OR ENGINEERED EARTH FILL COMPACTED TO 98% OF ITS MAXIMUM DRY DENSITY AS PER ASTM D 698-70 (STANDARD PROCTOR) UNLESS NOTED OTHERWISE.
-ALL PIERS TO EXTEND TO FROST DEPTH AS DETERMINED BY LOCAL JURISDICTION.
-TOP OF PIERS SHALL BE SLOPED SUCH THAT MOISTURE CANNOT ACCUMULATE.
-MINIMUM CONCRETE STRENGTH (f'c=3,000 PSI) SHALL CONFORM WITH MCDONALDS CAST-IN-PLACE CONCRETE SPECIFICATIONS SECTION 2.13-A
-USE OF ADMIXTURES SHALL CONFORM TO MCDONALDS CAST-IN-PLACE CONCRETE SPECIFICATION SECTION 2.6
-AIR ENTRAINMENT SHALL CONFORM WITH MCDONALDS CAST-IN-PLACE CONCRETE SPECIFICATION SECTIONS 2.6-A & 2.13-A
-WATER CONTENT RATIO SHALL CONFORM TO MCDONALDS CAST-IN-PLACE CONCRETE SPECIFICATIONS SECTION 2.13-A
-FOUNDATION CONCRETE TO BE TESTED PER MCDONALDS CAST-IN-PLACE CONCRETE SPECIFICATIONS SECTION 3.14
-PROVIDE A MINIMUM 3" OF CONCRETE COVER OVER ALL EMBEDDED STEEL.
-REINFORCEMENT PLACEMENT SHALL CONFORM TO MCDONALDS CAST-IN-PLACE CONCRETE SPECIFICATIONS SECTIONS 3.2 & 3.5. PERFORMED BY GENERAL CONTRACTOR.
-ANCHOR BOLTS TO BE SET IN ACCORDANCE WITH AISC CODE OF STANDARD PRACTICE
-DO NOT PLACE POLES ON CONCRETE UNTIL CONCRETE HAS CURED PER MCDONALDS CAST-IN-PLACE CONCRETE SPECIFICATION, SECTION 3.11-E.

STEEL:
-STEEL PIPE SECTION: ASTM A53 OR A252 TYPE E GRADE B (Fy = 35ksi)
-HSS ROUND SECTION: ASTM A500 GRADE B (Fy = 42ksi)
-HSS SQUARE/RECTANGULAR SECTIONS: ASTM A500 GRADE B (Fy = 46ksi)
-HEADED ANCHOR RODS ASTM F1554 GR 55, AN ACCEPTABLE ALTERNATIVE IS ASTM F1554 GR 55, S1 WHEN THE EMBEDDED END OF THE ROD IS THREADED AND THE NUT TACK WELDED PRIOR TO GALVANIZATION.
-STEEL ANGLES, CHANNELS, STRUCTURAL SHAPES AND PLATES: ASTM A36
-REINFORCEMENT: ASTM A615 GRADE 60 - BY GENERAL CONTRACTOR
-NUTS: ASTM A563A, HEAVY HEX
-WASHERS: ASTM F844 A36
-USE ASTM A153 CLASS C HOT DIPPED GALVANIZED BOLTS AND FASTENERS.
-ANCHOR RODS, NUTS, AND WASHERS SHALL BE SHIPPED AS AN ASSEMBLY FROM THE SIGNLIGHTING MANUFACTURER.
-NO FIELD HEATING TO BEND STEEL SHALL BE ALLOWED WITHOUT ENGINEER'S APPROVAL.
-DO NOT CUT ANCHOR RODS AFTER INSTALLATION OF POLE.
-AFTER INSTALLATION, ALL EXPOSED STEEL SHALL BE PAINTED WITH AN ENAMEL PAINT TO INHIBIT CORROSION.
-ANY FIELD WELDING SHALL FIRST BE VERIFIED BY ENGINEER AND PERFORMED IN ACCORDANCE WITH AWS D1.1.

-REFER TO SIGN MANUFACTURER DRAWINGS AND INSTRUCTIONS FOR ADDITIONAL INFORMATION.
-CONTRACTOR (INSTALLER) IS RESPONSIBLE FOR THE MEANS AND METHODS OF CONSTRUCTION IN REGARDS TO JOBSITE SAFETY.
-DETAILS AND STRUCTURAL MEMBERS NOT SHOWN DESIGNED BY OTHERS
-ANY MODIFICATIONS ARE TO BE VERIFIED BY AN ENGINEER.

REVISION DATE: 4/19/2017

REV	DATE	DESCRIPTION	BY
0	12/1/2025	PERMIT SET	JEJ

SEAL

DAVID B BENTZ LICENSED 27078 KANSAS PROFESSIONAL ENGINEER

DATE: 12/1/2025

PREPARED BY:
BISHOP ENGINEERING +
3501 104th Street, Urbandale, IA 50322 Ph: 515-276-0467

© 2025 McDonald's USA, LLC

PREPARED FOR: McDonald's USA, LLC

There exists and specifications are the confidential and proprietary property of McDonald's USA, LLC and shall not be copied or reproduced without written authorization. The contract documents were prepared for use on this specific site in conjunction with its issue date and no other use is authorized. Any reuse by the owner or others of these drawings for reference or example on another project requires the services of properly licensed architects and engineers. Reproduction of the contract documents for reuse on another project is not authorized.

DRAWN BY: CLT
STD ISSUE DATE: 12-1-2025
REVIEWED BY: JEJ
DATE ISSUED: 12-1-2025

TITLE: KANSAS CITY SITE PLAN
DESCRIPTION: DRIVE-THRU DETAILS
SITE ADDRESS: 2320 METROPOLITAN AVE, KANSAS CITY, KS 66106
SITE ID: 140405

SHEET NO. C2.3
BE #250004-2

12/1/2025 11:59:54 AM \\BE-FS01\PROJECTS2\LAND PROJECTS\2025\250004-2 MCDONALDS - KANSAS CITY, KS - METROPOLITAN AVE - WEST SITE\DWG\C2 LAYOUT.DWG

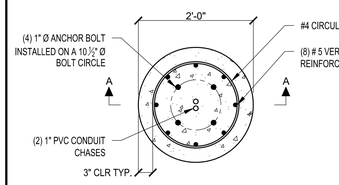

POLE BASE - PLAN VIEW
NOT TO SCALE

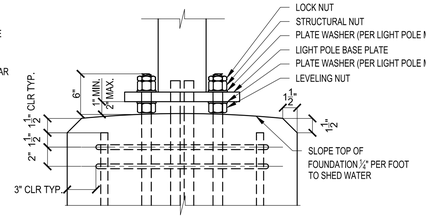

LIGHT POLE BASE ON TOP OF FOUNDATION
NOT TO SCALE

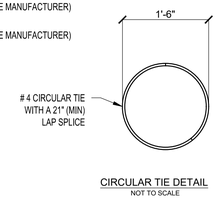

CIRCULAR TIE DETAIL
NOT TO SCALE

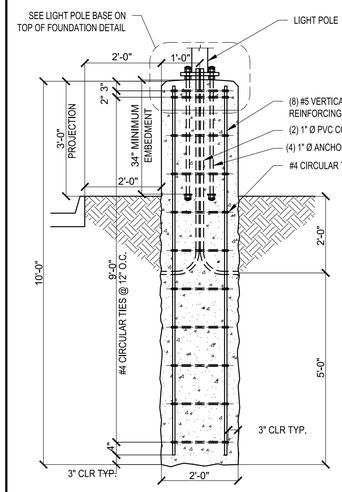

VIEW A-A
NOT TO SCALE

3 / C2.4 LIGHT POLE FOUNDATION DETAILS NTS

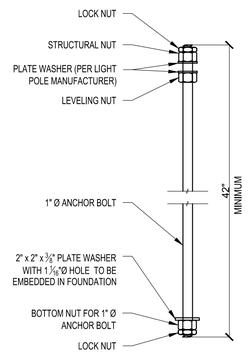

ANHCOR BOLT DETAIL
NOT TO SCALE

DESIGN CRITERIA:

AASHTO "STANDARD SPECIFICATIONS FOR STRUCTURAL SUPPORTS FOR HIGHWAY SIGNS, LUMINAIRES AND TRAFFIC SIGNALS, FIFTH EDITION, 2009

FOUNDATION DESIGN PARAMETERS:

1. MAXIMUM LIGHT POLE BASE REACTIONS:
   - BASE MOMENT = 16,845 lbs-ft
   - BASE SHEAR = 978 lbs
2. MAXIMUM WIND SPEED (3 SECOND GUST) = 120MPH
3. MINIMUM REQUIRED SOIL PARAMETERS:
   - COHESIVE SOILS:
     - SHEAR STRENGTH = 750 lbs/ft²
     - 6" MAXIMUM DEPTH OF DISTURBED SOIL OR TOP SOIL
   - COHESIONLESS SOILS:
     - ANGLE OF INTERNAL FRICTION = 27 DEGREES
     - WATER TABLE SHALL BE LOCATED BELOW THE BOTTOM OF THE FOUNDATION
     - 6" MAXIMUM DEPTH OF DISTURBED SOIL OR TOP SOIL
4. THE SOILS REPORT SHALL BE REVIEWED BY THE ENGINEER OF RECORD TO CONFIRM THAT THE MINIMUM SOIL PARAMETERS ARE MET OR EXCEEDED BEFORE THIS DESIGN IS USED. IF THE MINIMUM SOIL PARAMETERS ARE NOT MET, THIS DESIGN SHALL NOT BE USED.
5. THE ENGINEER OF RECORD SHALL REVIEW THE MAXIMUM BASE REACTIONS AND DESIGN WIND SPEED FOR THE LIGHT POLE TO BE INSTALLED TO DETERMINE IF THE FOUNDATION'S MAXIMUM DESIGN LOADS HAVE NOT BEEN EXCEEDED. THIS FOUNDATION DESIGN SHALL NOT BE USED IF THE MAXIMUM DESIGN LOADS OR WIND SPEED HAVE BEEN EXCEEDED.
6. THIS FOUNDATION DESIGN SHALL NOT BE USED IN LOCATIONS WHICH ARE CLOSER THAN 8ft FROM A RETAINING WALL.
7. THIS FOUNDATION DESIGN SHALL NOT BE USED AT LOCATIONS WHERE THE GROUND SLOPE EXCEEDS 4 inches per foot.

GENERAL NOTES:

1. CONCRETE COMPRESSIVE STRENGTH (f'c) SHALL BE A MINIMUM OF 3000psi
2. ANCHOR BOLTS SHALL BE ASTM F1554 GRADE 55, HOT DIP GALVANIZED PER ASTM F2329
3. REINFORCING STEEL SHALL BE ASTM A615 GRADE 60
4. NUTS SHALL BE HEAVY HEX ASTM A563 GRADE DH, HOT DIP GALVANIZED PER ASTM A153
5. PLATE SHALL BE ASTM A572 GRADE 50, HOT DIP GALVANIZED PER ASTM A153
6. LOCK NUT SHALL BE HOT DIP GALVANIZED PER ASTM A153

ACCRUENT UPLOAD DATE: 11/2/2012

NOTE:
-DESIGN CODES
IBC 2009
ASCE 7–05
ACI 318–08
AISC 13th EDITION
AWS D1.1
-WIND SPEED (100 MPH 3–SEC GUST)
—EXPOSURE C
-DESIGN LOADS DERIVED FROM THESE CODES AND FORCES
—AXIAL – 180#
—SHEAR – 270#
—MOMENT – 1010#
-USE CONCRETE WITH A 3000PSI MINIMUM COMPRESSIVE STRENGTH (f'c).
-PIER DEPTHS REQUIRED ARE MINIMUMS. ALL PIERS TO EXTEND TO FROST DEPTH AS DETERMINED BY LOCAL JURISDICTION.
-TOP OF PIERS SHALL BE SLOPED SUCH THAT MOISTURE CANNOT ACCUMULATE.
-ELECTRICAL CONTRACTOR TO PROVIDE INFORMATION ON CONDUIT AND ELECTRICAL REQUIREMENTS.
-MINIMUM ALLOWABLE LATERAL SOIL BEARING PRESSURE 100 PSF/FT OF DEPTH (x2)
-TOP 6" OF SOIL NEGLECTED IN EMBEDMENT DEPTH CALCULATIONS (EMBEDMENT DEPTHS SHOWN ARE FROM GRADE).
-PROVIDE A MINIMUM OF 3" CONCRETE COVER FOR ALL EMBEDDED STEEL.
-ALL REINFORCING STEEL BY GENERAL CONTRACTOR.

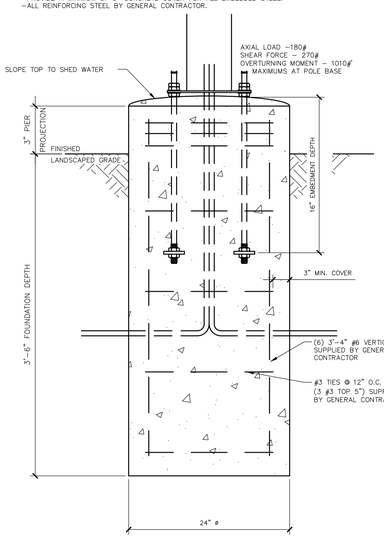

1 / C2.4 DIRECTIONAL SIGN FOUNDATION–100 MPH NTS

NOTES:
-TOP OF PIERS SHALL BE SLOPED SUCH THAT MOISTURE CANNOT ACCUMULATE.
-USE F1554 GRADE 36 BOLTS MINIMUM
-USE HOT DIPPED GALVANIZED BOLTS
-ANCHOR BOLTS TO BE SET IN ACCORDANCE WITH AISC CODE OF STANDARD PRACTICE
-ANCHOR RODS, NUTS, AND WASHERS SHALL BE SHIPPED AS AN ASSEMBLY FROM THE SIGN/LIGHTING MANUFACTURER
-DO NOT CUT ANCHOR BOLTS AFTER INSTALLATION OF POLE

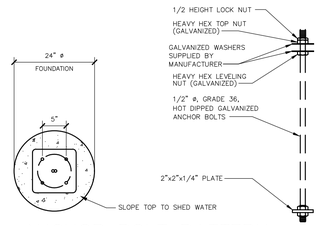

A ANCHOR BOLT PATTERN NTS

NOTES:
-TOP OF PIERS SHALL BE SLOPED SUCH THAT MOISTURE CANNOT ACCUMULATE.
-ANCHOR RODS, NUTS, AND WASHERS SHALL BE SHIPPED AS AN ASSEMBLY FROM THE SIGN/LIGHTING MANUFACTURER
-DO NOT CUT ANCHOR BOLTS AFTER INSTALLATION OF POLE
-INSTALL DIRECTIONAL SIGN FOOTING 3' FROM THE BACK OF CURB TO THE CENTER OF FOOTING UNLESS NOTED OTHERWISE ON PLAN.

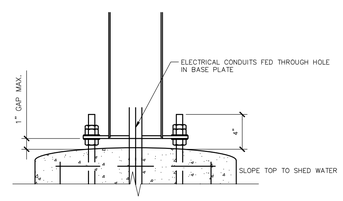

B CONNECTION DETAILS NTS

GEN. NOTES

-THE FOLLOWING CODES WERE USED IN DESIGN:
—IBC 2009
—ASCE 7–05
—ACI 318–08
—AISC 13th EDITION
—AWS D1.1
-WIND SPEED (100 MPH 3–SEC GUST)
—EXPOSURE C
-DESIGN LOADS DERIVED FROM THESE CODES AND FORCES
—AXIAL – 180#
—SHEAR – 270#
—MOMENT – 1010#

-ALL FOOTING EXCAVATIONS ARE TO BE CLEAR OF WATER AND FOREIGN MATTER BEFORE PLACING CONCRETE
-MINIMUM ALLOWABLE LATERAL SOIL BEARING PRESSURE OF 100PSF/FT (x2)
-SITE SOIL CONDITIONS TO BE CONFIRMED BY GEOTECHNICAL ENGINEER. IF ASSUMED SOIL CONDITIONS ARE NOT PRESENT, FOUNDATION SHALL BE DESIGNED BY A LICENSED STRUCTURAL ENGINEER TAKING INTO ACCOUNT ACTUAL SITE SOIL CONDITIONS.
-TOP 6" OF SOIL NEGLECTED IN EMBEDMENT DEPTH CALCULATIONS (EMBEDMENT DEPTHS SHOWN ARE FROM GRADE)

-ELECTRICAL CONTRACTOR TO PROVIDE INFORMATION ON CONDUIT AND ELECTRICAL REQUIREMENTS.

CONCRETE:

-ALL FOOTINGS SHALL BEAR ON FIRM UNDISTURBED RESIDUAL SOIL AND/OR ENGINEERED EARTH FILL COMPACTED TO 98% OF ITS MAXIMUM DRY DENSITY AS PER ASTM D 698–70 (STANDARD PROCTOR) UNLESS NOTED OTHERWISE.
-ALL PIERS TO EXTEND TO FROST DEPTH AS DETERMINED BY LOCAL JURISDICTION.
-TOP OF PIERS SHALL BE SLOPED SUCH THAT MOISTURE CANNOT ACCUMULATE.
-MINIMUM CONCRETE STRENGTH (f'c) SHOULD CONFORM WITH MCDONALDS CAST–IN–PLACE CONCRETE SPECIFICATIONS SECTION 2.13–A
-USE OF ADMIXTURES SHALL CONFORM TO MCDONALDS CAST–IN–PLACE CONCRETE SPECIFICATION SECTION 2.6
-AIR ENTRAINMENT SHALL CONFORM WITH MCDONALDS CAST–IN–PLACE CONCRETE SPECIFICATION SECTIONS 2.6–A & 2.13–A
-WATER CONTENT RATIO SHALL CONFORM TO MCDONALDS CAST–IN–PLACE CONCRETE SPECIFICATIONS SECTION 2.13–A
-FOUNDATION CONCRETE TO BE TESTED PER MCDONALDS CAST–IN–PLACE CONCRETE SPECIFICATIONS SECTION 3.14
-PROVIDE A MINIMUM 3" OF CONCRETE COVER OVER ALL EMBEDDED STEEL.
-REINFORCEMENT PLACEMENT SHALL CONFORM TO MCDONALDS CAST–IN–PLACE CONCRETE SPECIFICATIONS SECTIONS 3.2 & 3.5. PERFORMED BY GENERAL CONTRACTOR.
-ANCHOR BOLTS TO BE SET IN ACCORDANCE WITH AISC CODE OF STANDARD PRACTICE
-DO NOT PLACE POLES ON CONCRETE UNTIL CONCRETE HAS CURED PER MCDONALDS CAST–IN–PLACE CONCRETE SPECIFICATION, SECTION 3.11–E.

STEEL:

-STEEL PIPE SECTION: ASTM A53 OR A252 TYPE E GRADE B (Fy = 35ksi)
-HSS ROUND SECTION: ASTM A500 GRADE B (Fy = 42ksi)
-HSS SQUARE/RECTANGULAR SECTIONS: ASTM A500 GRADE B (Fy = 46ksi)
-CONNECTION BOLTS A325
-STEEL ANGLES, CHANNELS, STRUCTURAL SHAPES AND PLATES: ASTM A36
-REINFORCEMENT: GRADE 60 – BY GENERAL CONTRACTOR
-NUTS: A563DH OR A194–2H
-WASHERS: ASTM F–436
-USE HOT DIPPED GALVANIZED BOLTS AND FASTENERS
-ANCHOR RODS, NUTS, AND WASHERS SHALL BE SHIPPED AS AN ASSEMBLY FROM THE SIGN/LIGHTING MANUFACTURER
-NO FIELD HEATING TO BEND STEEL SHALL BE ALLOWED WITHOUT ENGINEER'S APPROVAL
-DO NOT CUT ANCHOR BOLTS AFTER INSTALLATION OF POLE
-AFTER INSTALLATION, ALL EXPOSED STEEL SHALL BE PAINTED WITH AN ENAMEL PAINT TO INHIBIT CORROSION.
-ANY FIELD WELDING SHALL FIRST BE VERIFIED BY ENGINEER AND PERFORMED IN ACCORDANCE WITH AWS D1.1.

-REFER TO SIGN MANUFACTURER DRAWINGS AND INSTRUCTIONS FOR ADDITIONAL INFORMATION.
-CONTRACTOR (INSTALLER) IS RESPONSIBLE FOR THE MEANS AND METHODS OF CONSTRUCTION IN REGARDS TO JOBSITE SAFETY.
-DETAILS AND STRUCTURAL MEMBERS NOT SHOWN DESIGNED BY OTHERS
-ANY MODIFICATIONS ARE TO BE VERIFIED BY AN ENGINEER

ACCRUENT UPLOAD DATE: 11/2/2012

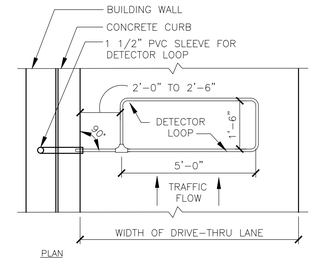

B – DT WINDOW DETECTOR LOOP

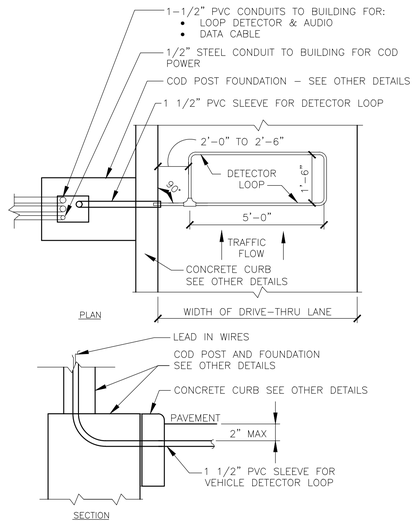

A – C.O.D. DETECTOR LOOP

NOTES

1. VERIFY CONDUIT SIZES AND LAYOUT WITH DETECTOR LOOP MANUFACTURER.
2. CENTER VEHICLE DETECTOR LOOP (ITEM # 217.11E1) IN DRIVE THRU LANE. INSTALL PER MFR. RECOMMENDATIONS.
3. SEE CIVIL FOR DIMENSIONS OF DRIVE–THRU LANE CONCRETE PAD FOR DETECTOR LOOP.
4. NO STEEL (REBAR OR ELECTRICAL WIRE) SHALL BE USED WITHIN 2' OF LOOP.
5. DETECTOR LOOP MANUFACTURERS:
   DETECTOR LOOPS MAY BE BY ONE OF THE FOLLOWINGS COMPANIES OR EQUAL.
   3M: 1–800–328–0033
   HME: 1–800–848–4468
6. DETECTOR LOOP MATERIAL:
   PVC TUBING 1/2" I.D. 100 PSI LOOP MADE FROM ONE LENGTH OF THIN FOURTEEN GAUGE STRANDED WIRE. LEAD–IN IS PRE–TWISTED AT FACTORY.
7. DETECTOR LOOP CONSTRUCTION:
   FORMED WITH ONE CONTINUOUS LENGTH OF PVC WITH NO SHARP CORNERS AS DETAILED. WIRE LOOPED, FORMED, & PIGTAILED AS DETAILED.

DETECTOR LOOP IN EXISTING PAVEMENT:

FOR ANY AND ALL DETECTOR LOOPS THAT WILL BE PLACED IN EXISTING PAVEMENT, CONTRACTOR SHALL SAWCUT & PLACE LOOP DETECTOR INTO EXISTING SLAB. UPON PLACEMENT OF LOOP DETECTOR, FILL SAWCUT WITH GRAY MASTIC JOINT SEALER.

1 / C2.4 DETECTOR LOOP DETAILS
NOT TO SCALE

REV	DATE	DESCRIPTION	BY
0	12/1/2025	PERMIT SET	JEJ

SEAL

DAVID B BENTZ LICENSED 27078 KANSAS PROFESSIONAL ENGINEER

DATE: 12/1/2025

PREPARED BY:

BISHOP ENGINEERING +
3501 104th Street, Urbandale, IA 50322 Ph: 515-276-0467

© 2025 McDonald's USA, LLC
There drawings and specifications are the confidential and proprietary property of McDonald's USA, LLC and shall not be copied or reproduced without written authorization. The contract documents were prepared for use on this specific site in conjunction with its issue date and are not to be used for any other purpose or at any other location. Reproduction of these drawings for reference or example on another project requires the services of properly licensed architects and engineers. Reproduction of the contract documents for reuse on another project is not authorized.

PREPARED FOR: McDonald's USA, LLC

DRAWN BY	STD ISSUE DATE	REVIEWED BY	DATE ISSUED
CLT	12-1-2025	JEJ	12-1-2025

TITLE: KANSAS CITY SITE PLAN
DESCRIPTION: DRIVE-THRU DETAILS
SITE ID: 140405
SITE ADDRESS: 2320 METROPOLITAN AVE, KANSAS CITY, KS 66106

SHEET NO. C2.4
BE #250004-2

12/1/2025 11:59:56 AM \\BE-FS01\PROJECTS2\LAND PROJECTS 2025\250004-2 MCDONALDS - KANSAS CITY, KS - METROPOLITAN AVE - WEST SITE\DWG\C2 LAYOUT.DWG

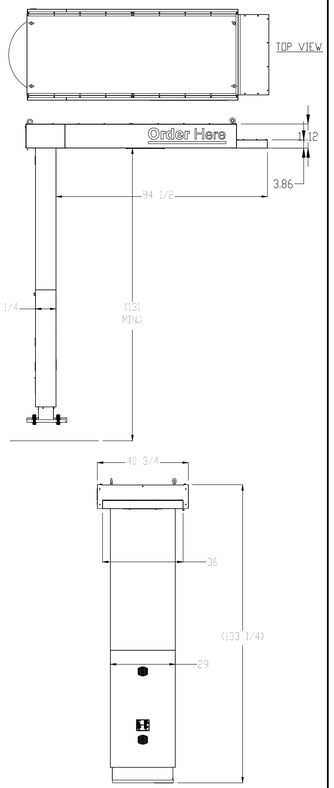

1 C2.5 CANOPY SCHEMATIC DETAIL
NOT TO SCALE

NOTE: THIS DRAWING IS SHOWN FOR SCHEMATIC PURPOSES ONLY. SEE MANUFACTURER FOR INSTALLATION INSTRUCTIONS

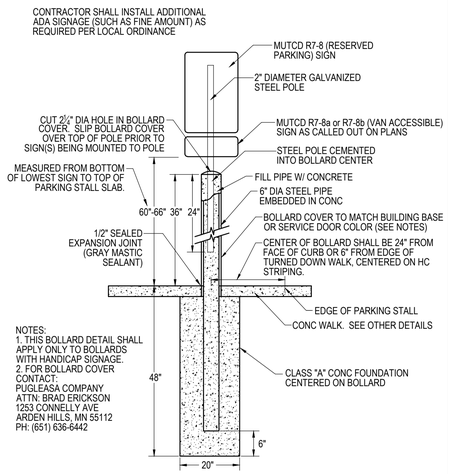

NOTES:
1. THIS BOLLARD DETAIL SHALL APPLY ONLY TO BOLLARDS WITH HANDICAP SIGNAGE.
2. FOR BOLLARD COVER CONTACT:
PUGLEASA COMPANY
ATTN: BRAD ERICKSON
1253 CONNELLY AVE.
ARDEN HILLS, MN 55112
PH: (651) 636-6442

2 C2.5 HANDICAP PARKING SIGN & BOLLARD DETAIL
NOT TO SCALE

NOTES:
1. THIS BOLLARD DETAIL SHALL APPLY ONLY TO BOLLARDS WITH ROLL FORWARD SIGNAGE.
2. FOR BOLLARD COVER CONTACT:
PUGLEASA COMPANY
ATTN: BRAD ERICKSON
1253 CONNELLY AVE
ARDEN HILLS, MN 55112
PH: (651) 636-6442

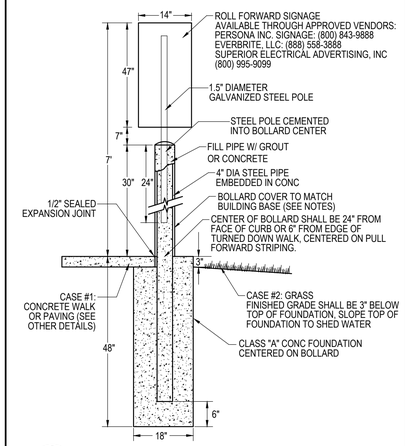

3 C2.5 ROLL FORWARD SIGN & BOLLARD DETAIL
NOT TO SCALE

NOTES:
1. THIS BOLLARD DETAIL SHALL APPLY TO BOLLARD AT REAR CORNER OF BUILDING ADJACENT TO DRIVE-THRU AND EXTERIOR TRASH ENCLOSURE BOLLARDS.
2. FOR BOLLARD COVER CONTACT:
PUGLEASA COMPANY
ATTN: BRAD ERICKSON
1253 CONNELLY AVE
ARDEN HILLS, MN 55112
PH: (651) 636-6442

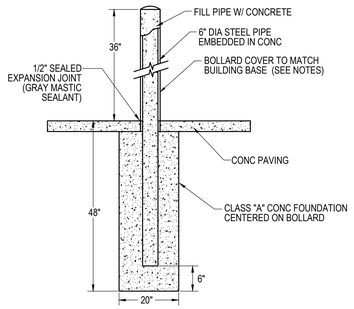

4 C2.5 BOLLARD DETAIL
NOT TO SCALE

KEY NOTES:

Ⓐ 2#12 & 1#12 GND., 3/4" CONDUIT TO LP-1 FOR CANOPY LIGHTING

Ⓑ 4#12 & 1#12 GND. & 1#12 ISOLATED GND., 3/4" CONDUIT TO CP FOR ISOLATED GROUND POWER TO MENUBAORDS AND MEDIA PLAYERS.

Ⓒ 2#12 & 1#12 GND & 1#12 ISOLATED GND., 3/4" CONDUIT TO CP FOR ISOLATED GROUND POWER TO CANOPIES. EACH CANOPY SHALL BE ON ITS OWN SEPERATE CIRCUIT.

Ⓓ 2#12 & 1#12 GND & 1#12 ISOLATED GND., 3/4" CONDUIT TO CP FOR ISOLATED GROUND POWER TO MENUBOARDS & MEDIA PLAYERS.

Ⓔ 2#12 & 1#12 GND. & 1#12 ISOLATED GND., 3/4" CONDUIT TO CP FOR ISOLATED GROUND POWER TO PRE-BROWSE BOARDS & MEDIA PLAYERS.

Ⓕ (2) 1-1/2" CONDUIT
ONE FOR CANOPY CABLING
ONE FOR LOOP DETECTOR

Ⓖ 2" CONDUIT - FOR CAT6 DATA CABLES

Ⓗ 1-1/2" CONDUIT - FOR CAT6 DATA CABLES

Ⓘ 1" CONDUIT - FOR CAT6 DATA CABLES

GENERAL NOTES:
1. VERIFY EXACT CIRCUITS AND QUANTITIES OF CIRCUITS WITH PANEL SCHEDULES ON DRAWING E4.2 AND MANUFACTURER'S INSTALLATION INSTRUCTIONS
2. PER MANUFACTURER'S INSTALLATION INSTRUCTIONS SEPERATE DEDICATED NEUTRALS ARE REQUIRED TO MENUBOARD AND PRE-BROWSE BOARD FOR EACH CIRCUIT (PLC AND LIGHTING)
3. IF ANY BENDS ARE REQUIRED, SWEEPS MUST BE PROVIDED IN CONDUITS.
4. FOR EXISTING LOCATIONS, VERIFY EXISTING CP PANEL HAS AMPACITY AND SUFFICIENT SPARES/ SPACES FOR TWO (2) NEW 20A/1P CIRCUITS. UPGRADE CP PANEL TO 42 CIRCUITS IF NECESSARY.
5. VERIFY EXISTING PULLBOXES ARE SIZED FOR NEW CONDUIT ROUTING. MODIFY PULLBOXES IF NECESSARY.
6. CAT6 CABLE AND POWER **CANNOT** BE COMBINED IN ONE CONDUIT

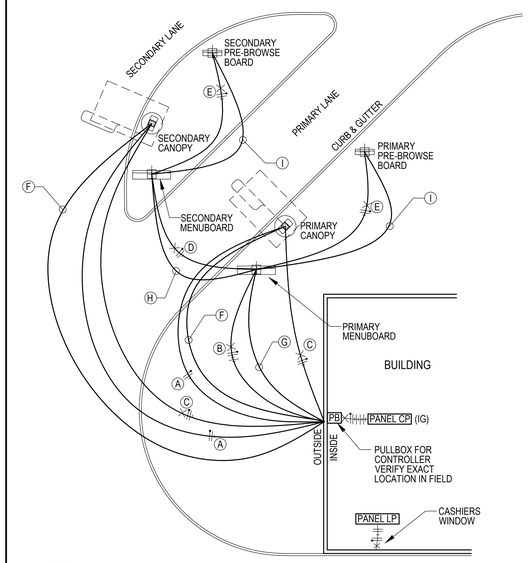

5 C2.5 DRIVE-THRU WIRING DETAIL
NOT TO SCALE

SKETCH CREATED FROM ODMD TEMPLATE 1.0 DATED 3/15/2017 & INCLUDES MODIFICATIONS PER REGIONAL INPUT DATED AUG. 2014.

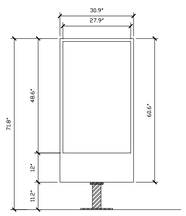

6 C2.5 DIGITAL PRE-BROWSE BOARD SCHEMATIC DETAIL
NOT TO SCALE

NOTE: THIS DRAWING IS SHOWN FOR SCHEMATIC PURPOSES ONLY. SEE MANUFACTURER FOR INSTALLATION INSTRUCTIONS

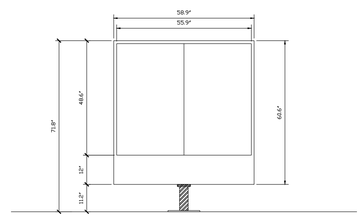

7 C2.5 DIGITAL MENU BOARD SCHEMATIC DETAIL
NOT TO SCALE

NOTE: THIS DRAWING IS SHOWN FOR SCHEMATIC PURPOSES ONLY. SEE MANUFACTURER FOR INSTALLATION INSTRUCTIONS

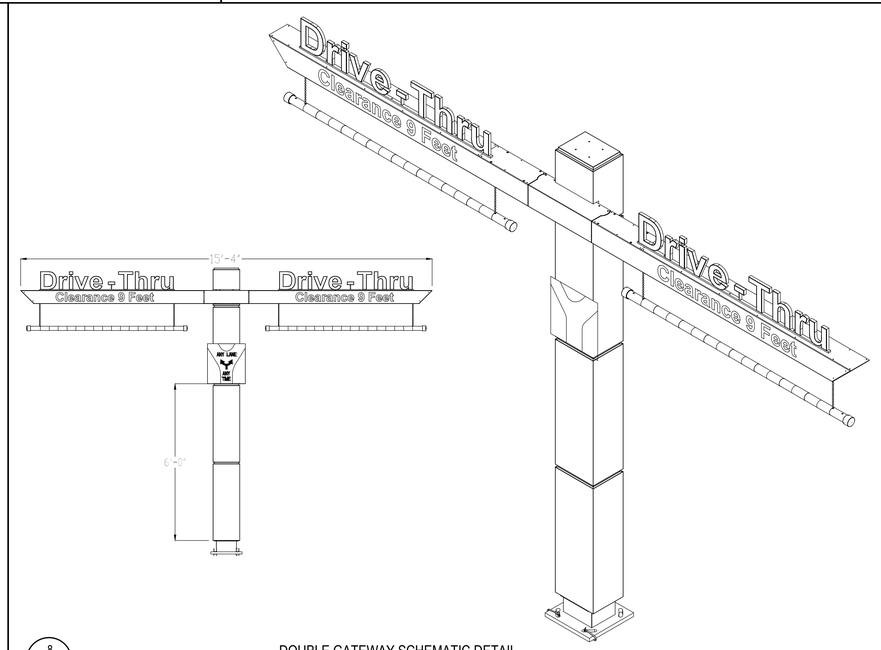

8 C2.5 DOUBLE GATEWAY SCHEMATIC DETAIL
NOT TO SCALE

NOTE: THIS DRAWING IS SHOWN FOR SCHEMATIC PURPOSES ONLY. SEE MANUFACTURER FOR INSTALLATION INSTRUCTIONS

REV	DATE	DESCRIPTION	BY
0	12/1/2025	PERMIT SET	JEJ

SEAL
DAVID B BENTZ LICENSED 27078 KANSAS PROFESSIONAL ENGINEER
DATE: 12/1/2025

PREPARED BY:
BISHOP ENGINEERING +
3501 104th Street, Urbandale, IA 50322 Ph: 515-276-0467

PREPARED FOR:
McDonald's USA, LLC

© 2025 McDonald's USA, LLC

These drawings and specifications are the confidential and proprietary property of McDonald's USA, LLC and shall not be copied or reproduced without written authorization. The contract documents were prepared for use on this specific site in conjunction with its issue date and are not suitable for use on a different site or at a later date. Reproduction of these drawings for reference or example on another project requires the services of properly licensed architects and engineers. Reproduction of the contract documents for reuse on another project is not authorized.

DRAWN BY: CLT
STD ISSUE DATE: 12-1-2025
REVIEWED BY: JEJ
DATE ISSUED: 12-1-2025

TITLE: KANSAS CITY SITE PLAN
DESCRIPTION: DRIVE-THRU DETAILS
SITE ADDRESS: 2320 METROPOLITAN AVE, KANSAS CITY, KS 66106
SITE ID: 140405

SHEET NO. C2.5
BE #250004-2

12/1/2025 12:00:00 PM \\BE-FS01\PROJECTS2\LAND PROJECTS 2025\250004-2 MCDONALD'S - KANSAS CITY, KS - METROPOLITAN AVE - WEST SITE\DWG\C2 LAYOUT.DWG

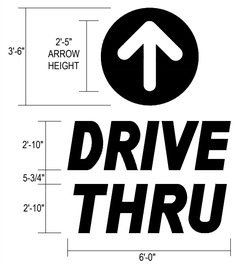

CIRCLE IS POSITIONED HORIZONTALLY, CENTERED ABOVE TYPE

ARROW IS POSITIONED VERTICALLY AND HORIZONTALLY INSIDE OF CIRCLE

ARROW ART KNOCKS OUT SO THAT ARROW IS THE COLOR OF THE PAVEMENT

LETTERS AND CIRCLE PAINT TO MATCH PANTONE PMS 123 YELLOW TYPES ALIGNS CENTERED

1 / C2.6 PAINTED 'DRIVE THRU' WITH ARROW

NOT TO SCALE

NOTE: ARROW SHALL BE PAINTED YELLOW (PMS 123)

2 / C2.6 PAINTED ARROW

NOT TO SCALE

NOTES:
1. ALL TEXT SHALL BE PAINTED YELLOW (PMS 123)
2. 'THANK YOU' SHALL BE LOCATED 8" FROM THE EDGE OF THE PULL FORWARD STRIPE TO THE BOTTOM OF THE WORD 'YOU' OR AS DIMENSIONED ON PLAN.

3 / C2.6 PAINTED 'THANK YOU'

NOT TO SCALE

NOTE: MARKING SHALL BE PAINTED YELLOW (PMS 1235C)

6 / C2.6 CURBSIDE PAVEMENT MARKING

NOT TO SCALE

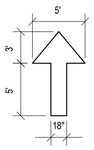

4 / C2.6 CIRCULATION DIRECTION ARROW

NOT TO SCALE

NOTE: ARROW SHALL BE PAINTED YELLOW (PMS 123)

5 / C2.6 ROLL FORWARD PAINTED ARROW

NOT TO SCALE

STRIPING NOTES:

- (A) 6" WIDE PAINTED STRIPE. PMS 123, YELLOW.
- (B) 1'-0" WIDE PAINTED DIRECTIONAL ARROW. PMS 123 YELLOW. SEE GENERAL NOTE 4.
- (C) 6" WIDE PAINTED MERGE POINT. PMS 123 YELLOW. SEE GENERAL NOTE 4.
- (D) PAINTED DRIVE THRU GRAPHIC. SEE DETAIL 1. SEE GENERAL NOTE 4.
- (E) PAINTED DRIVE THRU GRAPHIC. SEE DETAIL 2. SEE GENERAL NOTE 4.
- (F) PAINTED DRIVE THRU GRAPHIC. SEE DETAIL 3. SEE GENERAL NOTE 4.
- (G) 8" WIDE, 10' LONG PAINTED PULL FORWARD STRIPE. PMS 123 YELLOW
- (H) WHITE PAINTED SITE CIRCULATION ARROW. SEE DETAIL 4. SEE GENERAL NOTE 4.
- (I) 4" WIDE CUSTOMER PARKING STRIPING. WHITE.
- (J) PAINTED ISLAND, TYP. WHITE.
- (K) PAINTED HANDICAP SYMBOL, TYP. WHITE.
- (L) 6" WIDE PAINTED CROSSWALK STRIPING. WHITE.
- (M) 6" WIDE DASHED ROLL FORWARD STRIPING. PMS 123 YELLOW
- (N) PAINTED DRIVE THRU GRAPHIC. SEE DETAIL 5. SEE GENERAL NOTE 4.
- (O) 4" WIDE CUSTOMER PARKING STRIPING. PMS 123 YELLOW.
- (P) PAINTED DRIVE THRU GRAPHIC. SEE DETAIL 6. GENERAL NOTE 4.

GENERAL NOTES:

1. FIELD VERIFY AND CONFIRM EXISTING CONDITIONS AND DIMENSIONS PRIOR TO COMMENCING CONSTRUCTION. NOTIFY MCDONALD'S PROJECT MANAGER OF ANY DISCREPANCIES PRIOR TO COMMENCING CONSTRUCTION.
2. SEE SHEET C2.1 FOR ALL RADIUS DIMENSIONS.
3. SEE SHEET C2.2 FOR COD CONSTRUCTION.
4. ALL PAVEMENT STENCILS MUST BE PURCHASED FROM THE FOLLOWING AUTHORIZED PROVIDER.
   PAVEMENT STENCIL COMPANY
   P.O. BOX 18034
   ROANOKE, VA. 24014
   PH 800-250-5547 FAX 540-427-1326
   PAVEMENTSTENCIL.NET

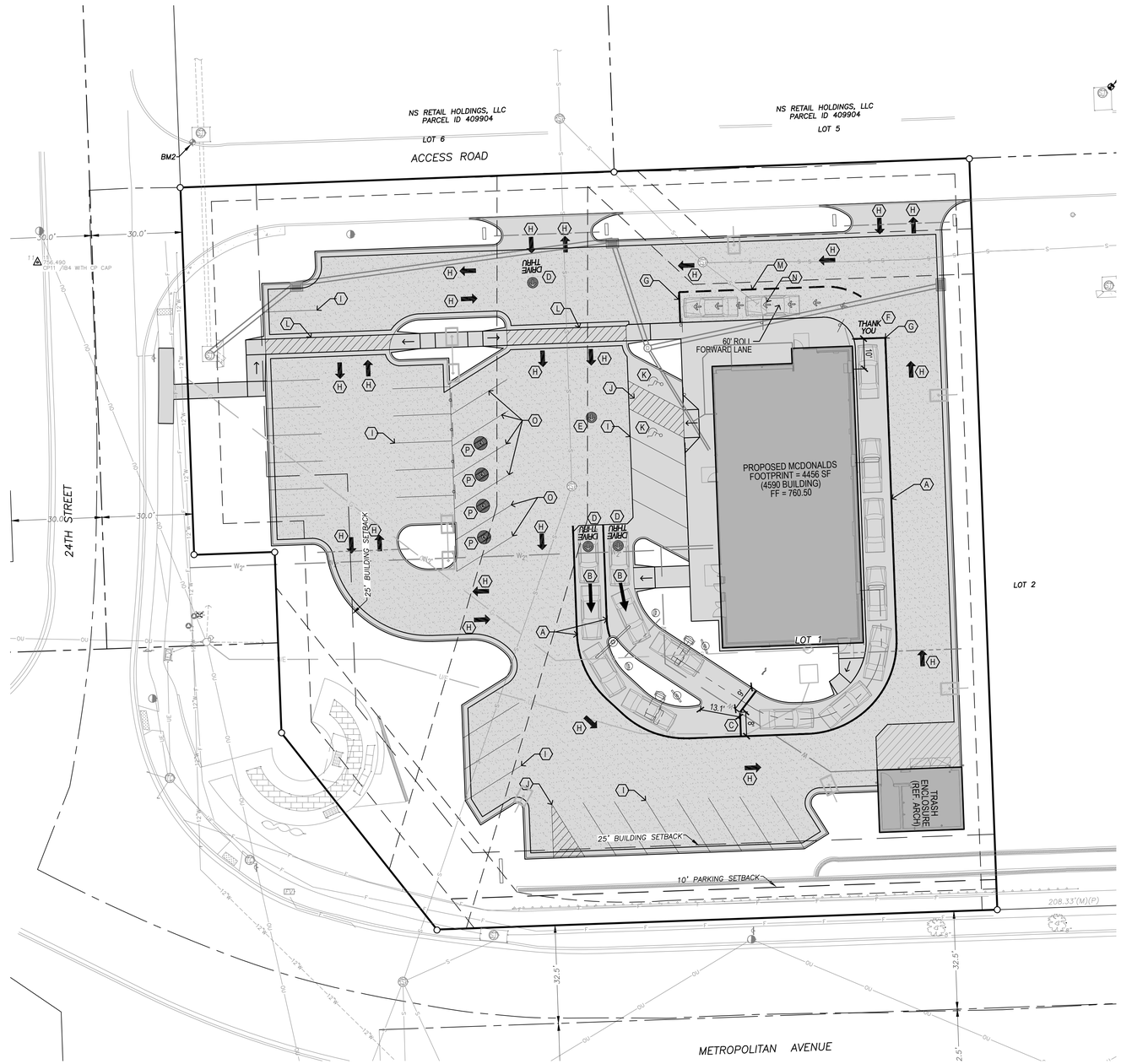

GRAPHIC SCALE

20 0 10 20 40

REV	DATE	DESCRIPTION	BY
0	12/1/2025	PERMIT SET	JEJ

SEAL

DAVID B BENTZ LICENSED 27078 KANSAS PROFESSIONAL ENGINEER

DATE: 12/1/2025

PREPARED BY:

BISHOP ENGINEERING +

3501 104th Street, Urbandale, IA 50322 Ph: 515-276-0467

PREPARED FOR:

McDonald's USA, LLC

© 2025 McDonald's USA, LLC

These drawings and specifications are the confidential and proprietary property of McDonald's USA, LLC and shall not be copied or reproduced without written authorization. The contract documents were prepared for use on this specific site in conjunction with its issue date and are not suitable for use on other sites or in other jurisdictions. Reproduction of these drawings for reference or example on another project requires the services of properly licensed architects and engineers. Reproduction of the contract documents for reuse on another project is not authorized.

DRAWN BY: CLT
STD ISSUE DATE: 12-1-2025
REVIEWED BY: JEJ
DATE ISSUED: 12-1-2025

TITLE: KANSAS CITY SITE PLAN

DESCRIPTION: STRIPING PLAN

SITE ID: 1.40405

SITE ADDRESS: 2320 METROPOLITAN AVE, KANSAS CITY, KS 66106

SHEET NO. C2.6

BE #250004-2

12/1/2025 12:00:02 PM \\BE-FS01\PROJECTS2\LAND PROJECTS 2025\250004-2 MCDONALD'S - KANSAS CITY, KS - METROPOLITAN AVE - WEST SITE\DWG\C2 LAYOUT.DWG

TOPSOIL NOTES:

1. STRIP AND STOCKPILE THE TOP 6" OF SOIL ON ALL DISTURBED AREAS.
2. RESPREAD TOPSOIL TO A MINIMUM DEPTH OF 6" ON ALL GREEN (NON PAVED) AREAS. IMPORT TOPSOIL AS NECESSARY TO ACHIEVE A MINIMUM DEPTH OF 6".
3. **TOPSOIL SHALL BE FREE OF ALL ROCK AND DEBRIS LARGER THAN 3/4" IN SIZE.**
4. TOPSOIL IS DEFINED AS: FERTILE, FRIABLE LOAM, CAPABLE OF SUSTAINING VIGOROUS PLANT GROWTH, FROM WELL DRAINED SITE FREE FROM FLOODING, NOT IN FROZEN OR MUDDY CONDITIONS; REASONABLE FREE FROM SUBSOIL, CLAY LUMPS, ROOTS, GRASS, WEEDS, STONES LARGER THAN 3/4 INCH IN DIAMETER, AND FOREIGN MATTER; ACIDITY RANGE (PH) OF 5.5 TO 7.5; CONTAINING MINIMUM 4 PERCENT AND MAXIMUM 20 PERCENT ORGANIC MATTER.

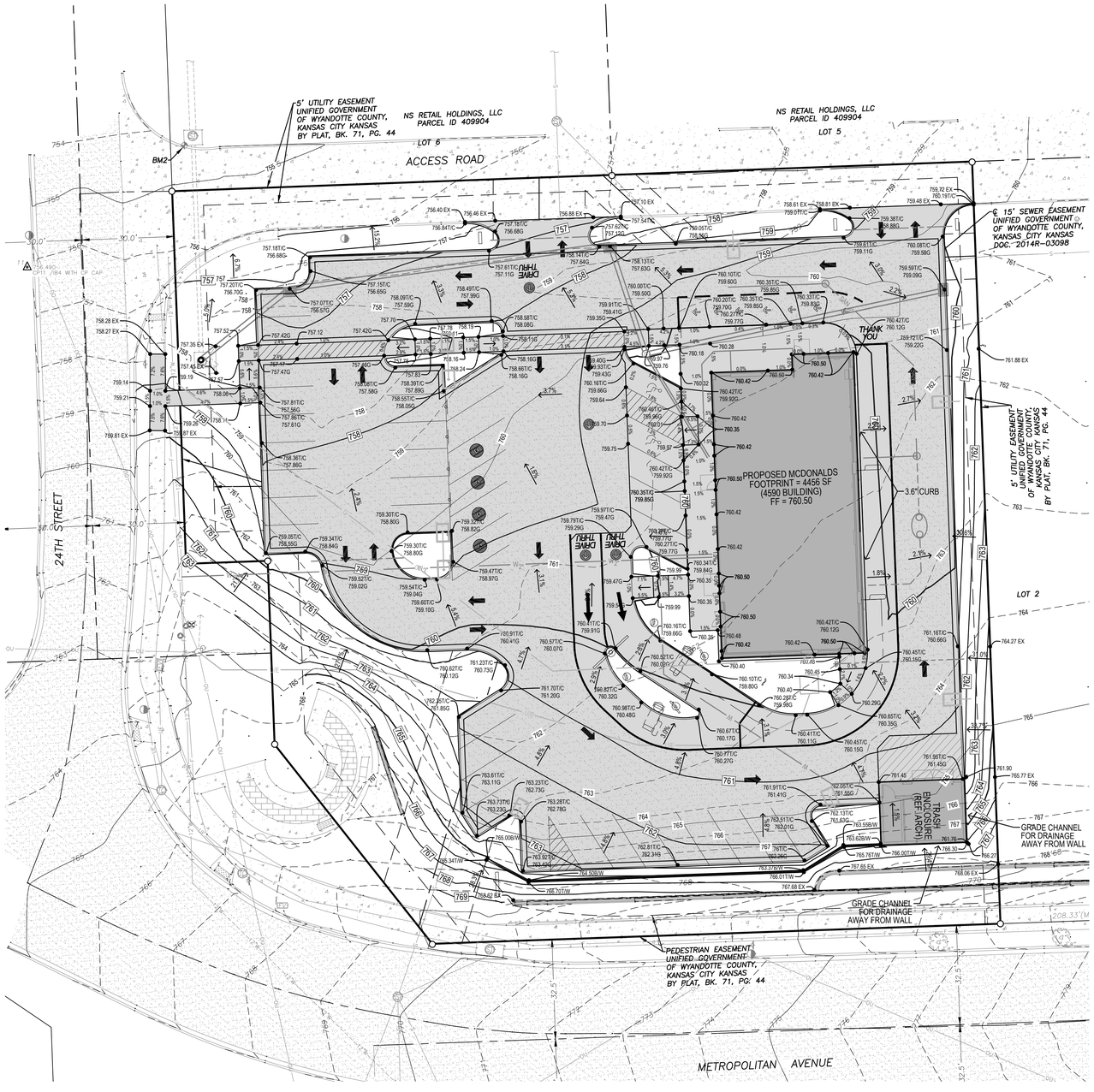

GRADING LEGEND:

EXISTING CONTOUR	150
PROPOSED CONTOUR	150
FINISHED GROUND ELEVATION	150.50
TOP OF CURB ELEVATION	150.50T/C
GUTTER ELEVATION	150.50G
TOP OF WALL ELEVATION	150.50T/W
BOTTOM OF WALL ELEVATION	150.50B/W
EDGE OF WALK ELEVATION	150.50E/W
TOP OF STAIR ELEVATION	150.50T/S
BOTTOM OF STAIR ELEVATION	150.50B/S

NOTE: WALL ELEVATIONS SHOWN ON PLAN ARE FINISHED GROUND GRADES AT THE TOP AND BOTTOM OF THE WALL.

GRAPHIC SCALE

20 0 10 20 40

REV	DATE	DESCRIPTION	BY
0	12/1/2025	PERMIT SET	JEJ

SEAL

DAVID B BENT LICENSED 27078 KANSAS PROFESSIONAL ENGINEER

DATE: 12/1/2025

PREPARED BY:

BISHOP ENGINEERING +
3501 104th Street, Urbandale, IA 50322 Ph: 515-276-0467

PREPARED FOR:

McDonald's USA, LLC

© 2025 McDonald's USA, LLC
There drawings and specifications are the confidential and proprietary property of McDonald's USA, LLC and shall not be copied or reproduced without written authorization. The contract documents were prepared for use on this specific site in conjunction with its issue date and are not to be used for any other project. Reproduction of these drawings for reference or example on another project requires services of properly licensed architects and engineers. Reproduction of the contract documents for reuse on another project is not authorized.

DRAWN BY	CLT
STD ISSUE DATE	12-1-2025
REVIEWED BY	JEJ
DATE ISSUED	12-1-2025

TITLE: KANSAS CITY SITE PLAN

DESCRIPTION: GRADING PLAN

SITE ID: 1.40405

SITE ADDRESS: 2320 METROPOLITAN AVE, KANSAS CITY, KS 66106

SHEET NO. C3.1

BE #250004-2

12/1/2025 12:01:15 PM \\BE-FS01\PROJECTS\2LAND PROJECTS 2025\250004-2 MCDONALD'S - KANSAS CITY, KS - METROPOLITAN AVE - WEST SITE\DWG\C3 GRADING.DWG

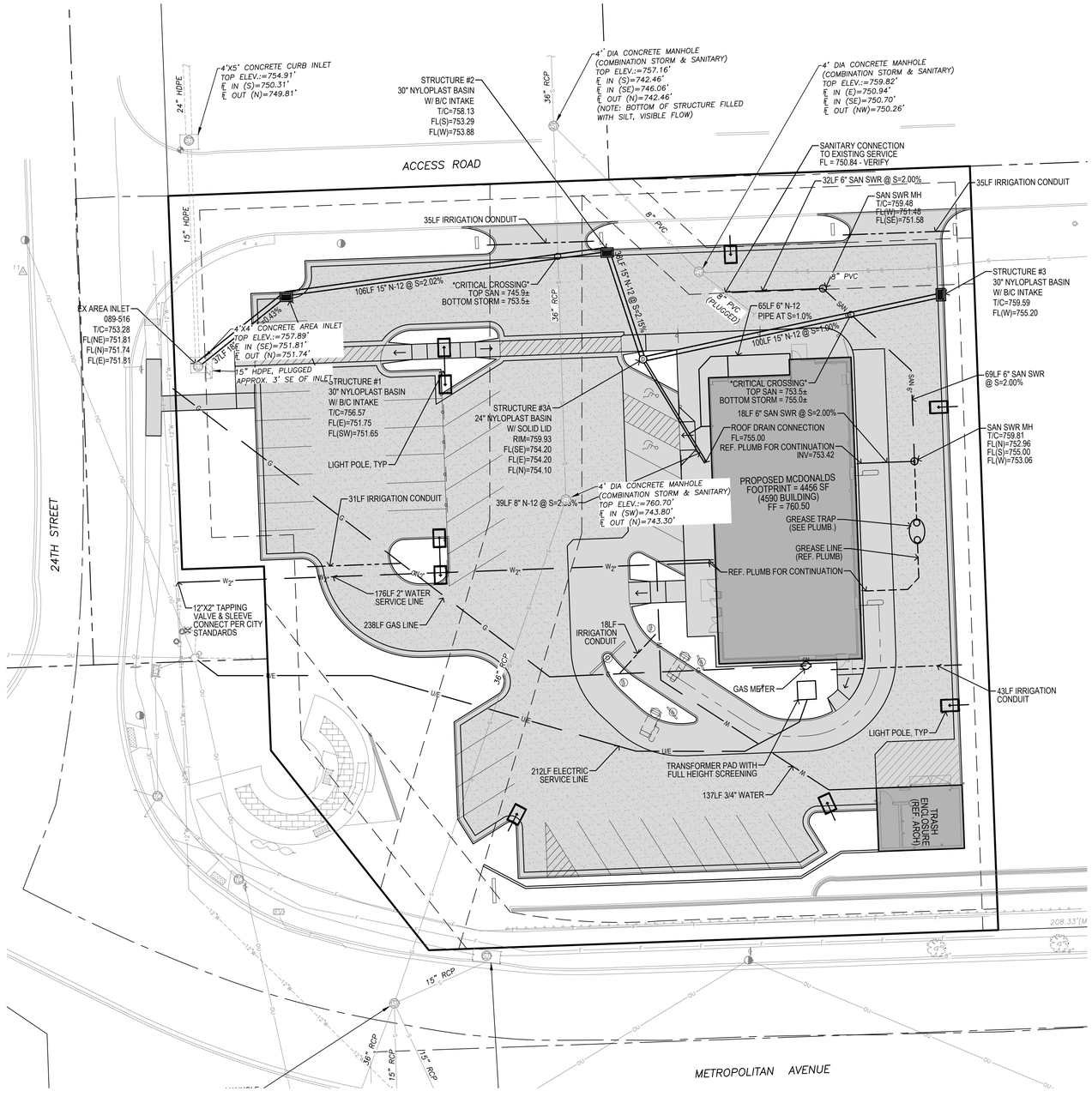

UTILITY NOTES:

1. ALL CONSTRUCTION TO BE PER LATEST UNIFIED GOVERNMENT OF WYANDOTTE COUNTY/KANSAS CITY, KANSAS STANDARD DETAILS AND SPECIFICATIONS
2. CONTRACTOR TO OBTAIN ALL UTILITY CONNECTION/DISCONNECTION PERMITS FROM THE CITY OF ROCHESTER PUBLIC WORKS DEPARTMENT PRIOR TO CONSTRUCTION BEGINNING
3. ALL PROPOSED UTILITIES SHALL BE PRIVATE, UNLESS NOTED OTHERWISE.
4. ALL WATER LINES SHALL HAVE A MINIMUM OF 5.5' AND MAX OF 10' OF COVER UNLESS NOTED OTHERWISE.
5. STORM SEWER CALLED OUT AS RCP MUST BE CLASS III RCP.
6. STORM SEWER CALLED OUT AS N-12 MAY BE EITHER N-12 OR CLASS III RCP.
7. CONTRACTOR MAY SUBSTITUTE PRE-CAST CONCRETE STRUCTURES FOR FOR NYLOPLAST STRUCTURES.
8. TRANSFORMER PAD IS SHOWN FOR REFERENCE ONLY AND MAY NOT BE DRAWN TO ACTUAL SIZE. PAD SHALL CONFORM TO ALL UTILITY COMPANY DESIGN STANDARDS AND SPECIFICATIONS.
9. GREASE INTERCEPTOR IS SHOWN FOR REFERENCE ONLY AND MAY NOT BE DRAWN TO ACTUAL SIZE. REFER TO PLUMBING PLANS FOR DETAILED DRAWINGS AND SPECIFICATIONS. PLUMBING PLANS SHALL TIE INTO SANITARY SERVICE AT LOCATION AND ELEVATION SHOWN ON PLANS. GREASE INTERCEPTOR SHALL BE LOCATED OUTSIDE OF THE DRIVE THRU LANE AND RIM ELEVATIONS SHALL MATCH PAVEMENT GRADE.
10. GREASE INTERCEPTOR VENT LINES ARE SHOWN FOR REFERENCE ONLY. REFER TO PLUMBING PLANS FOR DETAILED PLANS AND SPECIFICATIONS.
11. CONTRACTOR SHALL COORDINATE WITH OWNER/OPERATOR FOR POSSIBLE INSTALLATION OF NEW IRRIGATION SYSTEM.

SANITARY SEWER CONNECTION NOTES:

1. APPROXIMATE LOCATION OF EXISTING SANITARY SERVICE IS SHOWN. CONTRACTOR SHALL VERIFY EXACT LOCATION AND ELEVATION PRIOR TO CONSTRUCTION.
2. CONTRACTOR SHALL VERIFY THAT A MINIMUM SLOPE OF 2% CAN BE MAINTAINED FROM THE CONNECTION POINT TO THE PROPOSED BUILDING.
3. IF CONNECTION POINT IS TOO HIGH, ADDITIONAL REMOVAL OF EXISTING SANITARY SERVICE MAY BE REQUIRED AND SHALL BE INCIDENTAL TO CONSTRUCTION.
4. IF CONNECTION POINT IS TO BE MOVED THEN CONTRACTOR SHALL INSTALL A MANHOLE AT THE CONNECTION LOCATION. MANHOLE RIM SHALL BE FLUSH WITH PROPOSED GROUND.
5. IF 2% MINIMUM SLOPE CANNOT BE MAINTAINED, BISHOP ENGINEERING MUST BE CONTACTED (JOEL JACKSON 515-276-0467) PRIOR TO ANY ADDITIONAL SANITARY WORK.

WATER MAIN CONNECTION NOTES:

1. APPROXIMATE LOCATION OF EXISTING WATER MAIN IS SHOWN. CONTRACTOR SHALL VERIFY EXACT LOCATION AND ELEVATION PRIOR TO CONSTRUCTION.

CRITICAL CROSSING NOTES:

1. CONTRACTOR SHALL WORK WITH UTILITY COMPANIES FOR ALL ADJUSTMENTS TO ANY AND ALL UTILITIES IN CONFLICT WITH PROPOSED CONSTRUCTION.

GRAPHIC SCALE
20 0 10 20 40

REV	DATE	DESCRIPTION	BY
0	12/1/2025	PERMIT SET	JEJ

SEAL

DAVID B BENTZ
LICENSED
27078
KANSAS
PROFESSIONAL ENGINEER

DATE: 12/1/2025

PREPARED BY:

BISHOP ENGINEERING +
3501 104th Street, Urbandale, IA 50322 Ph: 515-276-0467

PREPARED FOR:

McDonald's USA, LLC

© 2025 McDonald's USA, LLC

These drawings and specifications are the confidential and proprietary property of McDonald's USA, LLC and shall not be copied or reproduced without written authorization. The contract documents were prepared for use on this specific site in conjunction with its issue date and are not suitable for use on other sites or in other jurisdictions. Reuse of these drawings for reference or example on another project requires the services of properly licensed architects and engineers. Reproduction of the contract documents for reuse on another project is not authorized.

DRAWN BY: CLT
STD ISSUE DATE: 12-1-2025
REVIEWED BY: JEJ
DATE ISSUED: 12-1-2025

TITLE: KANSAS CITY SITE PLAN
DESCRIPTION: UTILITY PLAN
SITE ID: 140405
SITE ADDRESS: 2320 METROPOLITAN AVE, KANSAS CITY, KS 66106

SHEET NO. C4.1
BE #250004-2

12/1/2025 12:02:26 PM \\BE-FS01\PROJECTS\2LAND PROJECTS 2025\250004-2 MCDONALD'S - KANSAS CITY, KS - METROPOLITAN AVE - WEST SITE\DWG\C4 UTILITY.DWG

LIGHTING PLAN NOTE:

1. LIGHTING PLAN WAS PREPARED BY SECURITY LIGHTING SYSTEMS. FOR QUESTIONS CONTACT VALERIA HOLLAND (847-499-5160) VALERIA.HOLLAND@CURRENTLIGHTING.COM

NOTES:

1. THE FOOTCANDLE LEVELS AS SHOWN ARE BASED ON THE FOLLOWING CRITERIA. ANY SUBSTITUTIONS IN SPECIFIED FIXTURES OR CHANGES TO LAYOUT WILL AFFECT LIGHTING LEVELS SHOWN AND WILL NOT BE THE RESPONSIBILITY OF SECURITY LIGHTING.
2. THE CONTRIBUTION OF THE SOFFIT / BUILDING LIGHTING IS NOT REFLECTED ON THE DRAWING UNLESS SOFFIT / BUILDING LIGHTING IS SPECIFIED IN THE FIXTURE SCHEDULE BELOW.
3. DISTANCE BETWEEN READINGS 10'
4. FINAL ADJUSTMENTS TO AIMING ANGLE/DIRECTION OF FIXTURES MAY BE REQUIRED TO ELIMINATE LIGHT TRESPASS OR GLARE ONTO ADJOINING PROPERTIES OR ROADWAYS.

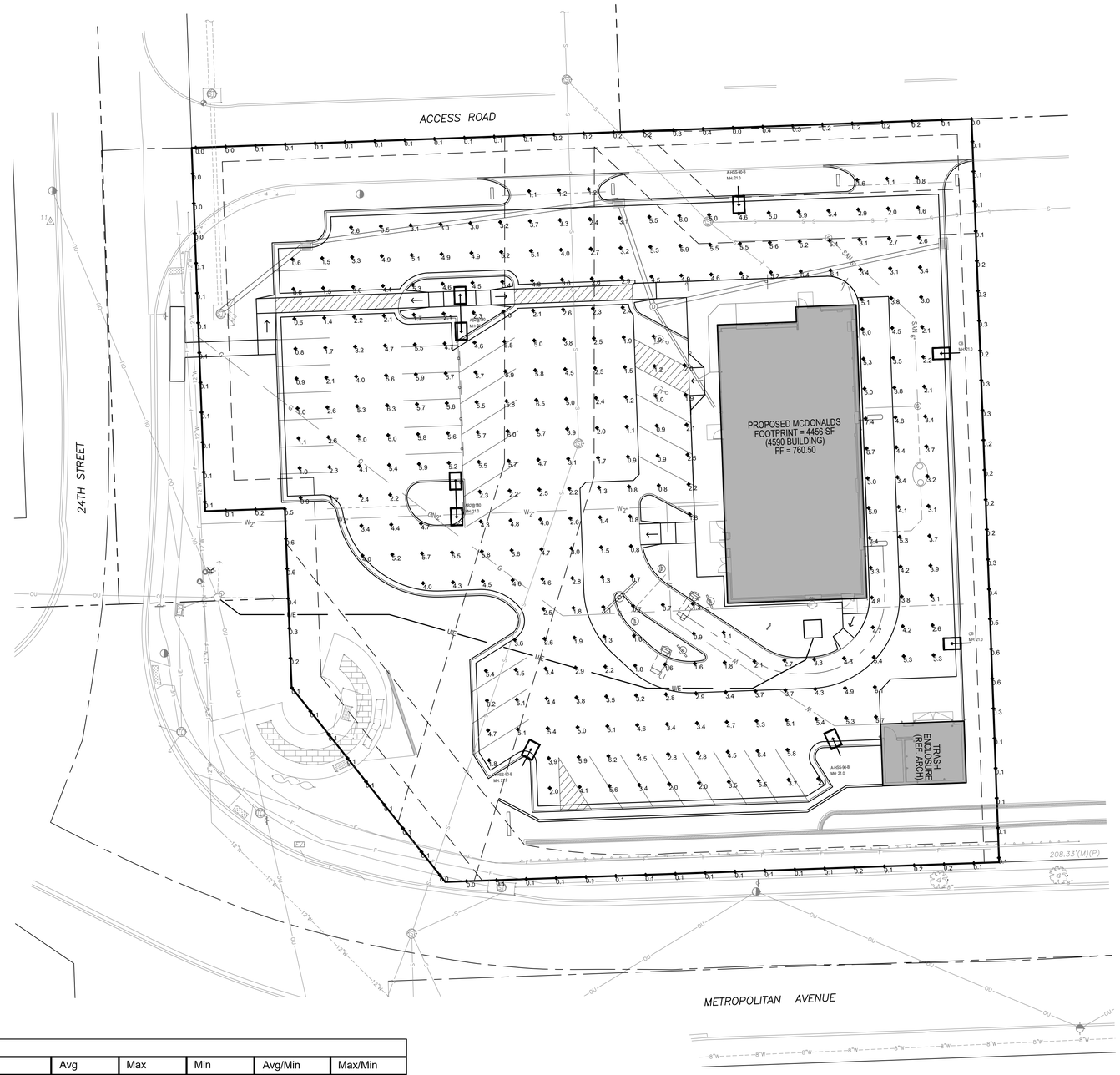

1. THIS LIGHTING DESIGN IS BASED ON INFORMATION SUPPLIED BY OTHERS TO SECURITY LIGHTING SYSTEMS. SITE DETAILS PROVIDED HEREON ARE REPRODUCED ONLY AS A VISUALIZATION AID. FIELD DEVIATIONS MAY SIGNIFICANTLY AFFECT PREDICTED PERFORMANCE. PRIOR TO INSTALLATION, CRITICAL SITE INFORMATION (POLE LOCATIONS, ORIENTATION, MOUNTING HEIGHT, ETC.) SHOULD BE COORDINATED WITH THE CONTRACTOR AND/OR SPECIFIER RESPONSIBLE FOR THE PROJECT.

2. LUMINAIRE DATA IS TESTED TO INDUSTRY STANDARDS UNDER LABORATORY CONDITIONS. OPERATING VOLTAGE AND NORMAL MANUFACTURING TOLERANCES OF LAMP, BALLAST, AND LUMINAIRE MAY AFFECT FIELD RESULTS.

3. CONFORMANCE TO FACILITY CODE AND OTHER LOCAL REQUIREMENTS IS THE RESPONSIBILITY OF THE OWNER AND/OR THE OWNER'S REPRESENTATIVE.

4. THIS LAYOUT MAY NOT MEET TITLE 24 OR LOCAL ENERGY REQUIREMENTS. IF THIS LAYOUT NEEDS TO E COMPLIANT WITH TITLE 24 OR OTHER ENERGY REQUIREMENTS, PLEASE CONSULT FACTORY WITH SPECIFIC DETAILS REGARDING PROJECT REQUIREMENTS SO THAT REVISIONS MAY BE MADE TO THE DRAWING.

** - SPECIFY COLOR

GRAPHIC SCALE

20 0 10 20 40

* PROJECT WIND LOAD CRITERIA BASED ON:
ASCE 7-10 WIND SPEEDS (3-SEC PEAK GUST MPH)
50 YEAR MEAN RECURRENCE INTERVAL

THIS DRAWING MEETS OR EXCEEDS McDONALDS CURRENT ILLUMINATION SPECIFICATIONS OF A 3-4 FOOTCANDLE AVERAGE, UNLESS SUPERSEDED BY OTHER REQUIREMENTS.

Calculation Summary							
Label	CalcType	Units	Avg	Max	Min	Avg/Min	Max/Min
PAVED SURFACE READINGS	Illuminance	Fc	3.60	7.4	0.6	6.00	12.33
Propertyline	Illuminance	Fc	0.17	0.6	0.0	N.A.	N.A.

Luminaire Schedule									
Symbol	Qty	Label	Arrangement	LLF	Description	Lum. Watts	EPA	Mtg Height	Pole Type
	3	A-HSS-90-B	Single	0.850	VP-2-320L-210-5K7-4W-UNV-A-PSS-HSS-90-B	213.9	0.607	21	SES-18-40-1-TA-GL-xx (4")
	2	AB2@180	Back-Back	0.850	VP-2-320L-210-5K7-4W-BC-UNV-A-PSS	213.9	1.214	21	SES-18-40-1-TA-GL-xx (4")
	2	CB	Single	0.850	VP-1-160L-100-5K7-2-BC-UNV-A-PSS	92	0.607	21	SES-18-40-1-TA-GL-xx (4")

SECURITY LIGHTING™
2100 Golf Road, Suite 460, Rolling Meadows, IL 60008
1-800-544-4848

REV	DATE	DESCRIPTION	BY
0	12/1/2025	PERMIT SET	JEJ

SEAL

DAVID B BENTZ LICENSED 27078 KANSAS PROFESSIONAL ENGINEER

DATE: 12/1/2025

PREPARED BY:
BISHOP ENGINEERING +
3501 104th Street, Urbandale, IA 50322 Ph: 515-276-0467

PREPARED FOR:
McDonald's USA, LLC

© 2025 McDonald's USA, LLC
These drawings and specifications are the confidential and proprietary property of McDonald's USA, LLC and shall not be copied or reproduced without written authorization. The contract documents were prepared for use on this specific site in conjunction with its issue date and are not to be used for any other project. Use of these documents on another project requires the services of properly licensed architects and engineers. Reproduction of the contract documents for reuse on another project is not authorized.

DRAWN BY: CLT
STD ISSUE DATE: 12-1-2025
REVIEWED BY: JEJ
DATE ISSUED: 12-1-2025

TITLE: KANSAS CITY SITE PLAN
DESCRIPTION: LIGHTING PLAN
SITE ID: 140405
SITE ADDRESS: 2320 METROPOLITAN AVE, KANSAS CITY, KS 66106

SHEET NO. C4.2
BE #250004-2

12/1/2025 12:02:30 PM \\BE-FS01\PROJECTS2\LAND PROJECTS 2025\250004-2 MCDONALD'S - KANSAS CITY, KS - METROPOLITAN AVE - WEST SITE\DWG\C4 UTILITY.DWG

LANDSCAPE NOTES:

1. ALL SODDING & LANDSCAPE PLANTINGS SHALL BE INSTALLED IN ACCORDANCE WITH THE URBAN STANDARD SPECIFICATIONS, UNLESS SPECIFIED OTHERWISE.
2. SOD ALL DISTURBED AREAS WITHIN THE CONTRACT LIMITS, UNLESS NOTED OTHERWISE. SOD LIMITS SHOWN ON PLAN ARE FOR REFERENCE ONLY. FINAL LIMITS MAY CHANGE BASED ON CONSTRUCTION ACTIVITIES.
3. ALL PLANT MATERIAL SHALL CONFORM TO THE LATEST EDITION OF THE AMERICAN STANDARD FOR NURSERY STOCK (ANSI Z60.1).
4. CONTRACTOR SHALL GUARANTEE ALL PLANT MATERIAL FOR A PERIOD OF ONE YEAR FROM THE DATE OF ACCEPTANCE.
5. IT IS THE CONTRACTORS RESPONSIBILITY TO REMOVE IDENTIFICATION TAGS AND CORDS ON ALL PLANT MATERIAL PRIOR TO THE COMPLETION OF THE CONTRACT. IDENTIFICATION TAGS MUST BE LEFT ON UNTIL AFTER ACCEPTANCE BY OWNER OR OWNER'S REPRESENTATIVE.
6. THE LANDSCAPING CONTRACTOR SHALL HAVE ALL UTILITIES LOCATED BEFORE STARTING ANY SITE WORK OR PLANTING. THE CONTRACTOR SHALL BE RESPONSIBLE FOR THE PROTECTION OF ALL EXISTING UTILITIES.
7. NO LANDSCAPE MATERIAL SHALL BE SUBSTITUTED WITHOUT THE AUTHORIZATION OF THE LANDSCAPE ARCHITECT.
8. ALL EDGING SHALL MATCH EXISTING.
9. CONTRACTOR SHALL BE RESPONSIBLE MAINTAINING APPROPRIATE LEVEL OF WATERING FOR ALL NEW PLANTS FOR A PERIOD OF 30 DAYS.
10. WHEN NOTED, SHRUB AND PERENNIAL PLANTING BEDS SHALL BE MULCHED WITH 4" THICK SHREDDED HARDWOOD MULCH.
14. WHEN NOTED, SHRUB AND PERENNIAL PLANTING BEDS SHALL INCORPORATE TYPAR 3301 NONWOVEN LANDSCAPE FABRIC (OR SIMILAR) AND 3" THICK LAYER OF WASHED RIVER ROCK (1.5" NOMINAL SIZE).
15. ALL BEDS TO RECEIVE GRANULAR PRE-EMERGENT WEED CONTROL BEFORE AND AFTER MULCH/ROCK IS INSTALLED.
16. LANDSCAPE SCREENING AT TRANSFORMER: CONTRACTOR TO VERFY DOOR LOCATION AND ADJUST PLANTINGS AT TRANSFORMER AS NECESSARY. 1' CLEAR ZONE FROM EDGE OF PAD AROUND TRANSFORMER.

IRRIGATION NOTES:

- FOR BIDDING PURPOSES, THIS PROJECT DOES NOT INCLUDE A SITE IRRIGATION SYTEM.
- CONTRACTOR SHALL SUBMIT TO THE OWNER OR OWNER'S REPRESENTATIVE A SEPARATE PROPOSAL FOR A SITE IRRIGATION SYSTEM. PROPOSAL SHALL BE DESIGN/BUILD FOR A COMPLETE OPERATIONAL IRRIGATION SYSTEM APPROPRIATE FOR THE SITE. IRRIGATION CONTRACTOR SHALL BE RESPONSIBLE FOR ALL DESIGN, COORDINATION, TESTING, PERMITS, INSPECTIONS, ETC.

LEGEND

SOD: PROVIDE AND INSTALL SOD FROM LOCAL SUPPLIERS. AREAS TO BE SODDED MUST BE FREE OF ALL CONSTRUCTION DEBRIS AND ANY DIRT CLUMPS OVER 1" IN DIAMETER. THOROUGHLY WATER SOD UPON INSTALLATION. CONTRACTOR TO MAINTAIN WATERING UNTIL SOD IS ESTABLISHED (ROOTS KNITTED INTO SUBSURFACE)

ROCK LANDSCAPE AREA: INCORPORATE TYPAR 3301 NONWOVEN LANDSCAPE FABRIC (OR SIMILAR) AND 4" THICK LAYER OF DRESSER TRAP ROCK (2.5" NOMINAL SIZE). CONTACT DRESSER TRAP DIRECT FOR PRICING AND SHIPPING (PHONE: 800-537-3573). EDGING BETWEEN ROCK MAINTENANCE AREAS AND SEEDED AREAS AND PLANTING BEDS IS TO BE DURAEDGE 3/16" STEEL EDGING - COLOR BLACK, OR APPROVED EQUAL DO NOT INSTALL EDGING BETWEEN PAVED SURFACES AND ROCK MAINTENANCE AREAS.

SHREDDED HARDWOOD MULCH PLANTING BED: 3" DEPTH SHREDDED HARDWOOD MULCH NATURAL IN COLOR SPREAD EVENLY THROUGHOUT PLANTING BED WITH SPADE CUT EDGE WITH WEED PREVENTATIVE.

GENERAL LANDSCAPE REQUIREMENTS

SEE COVER SHEET FOR ADDITIONAL SITE CALCULATIONS FOR PROJECT SITE

OVERLAY DISTRICT REQUIREMENT
LANDSCAPE SHALL EXCEED 75% OF THE TYPICAL CODE FOR LANDSCAPE
1.37 ACRES, 21 TREES REQUIRED - 21 TREES PROVIDED

FRONTAGE LANDSCAPE REQUIREMENT
FRONTAGE ALONG METROPOLITAN AVENUE
218.6 LF / 30 = 6.2 = 6 TREES REQUIRED = 6 TREES PROVIDED INCLUDING 1 EXISTING TREE TO REMAIN
FRONTAGE ALONG 24TH STREET
249.9 LF / 30 = 8.3 = 8 TREES REQUIRED = 8 TREES PROVIDED
FRONTAGE ALONG ACCESS ROAD
201.3 LF / 30 = 6.71 TREES REQUIRED = 7 TREES REQUIRED, 7 TREES PROVIDED
(261.3) - 60' FOR DRIVE ENTRANCES AND CLEARANCE = 201.3 LF

PARKING PERIMETER REQUIREMENTS
ALL PARKING PERIMETERS HAVE SHRUB BORDER ALONG ALL PARKING AREAS THAT FACE PUBLIC STREETS
METROPOLITAN AVENUE HAS A SHURB PERIMETER AND A RETAINING WALL FOR SCREENING.
WITH FRONTAGE LANDSCAPE TREES PER FRONTAGE LANDSCAPE REQUIREMENT.

INTERIOR PARKING LOT REQUIREMENTS
TOTAL PARKING STALLS ON SITE 39
REQUIRED OVERSTORY TREES (1 / 20 STALLS) 34 / 20 = 1.95 = 2 TREES REQUIRED = 2 TREES PROVIDED

BUILDING FOUNDATION LANDSCAPE
SHRUBS AND PERENNIALS PROVIDED ALONG BUILDING FACADE AND IN ISLANDS NEAR BUILDING FACADE WHERE PAVEMENT IS NOT PROPOSED

SCREENING REQUIREMENTS
SUBJECT PROPERTY IS NOT ADJACENT ANY RESIDENTIAL. NO FENCES ARE PROPOSED ON SITE.

SCREENING FOR THE TRANSFORMER IS PROVIDED WITH EVERGREEN SHRUBS 5' TALL AT TIME OF PLANTING. SEE PLANTING SCHEDULE.

SCREENING OF MECHANICAL EQUIPMENT IS NOTED AND SHOWN ON ARCHITECTURAL / BUILDING PLANS AND ELEVATIONS.

TRASH / DUMPSTER ENCLOSURE IS SCREENED AND ENCLOSED BY ARCHITECTURAL SCREEN WALL ON ALL SIDES.

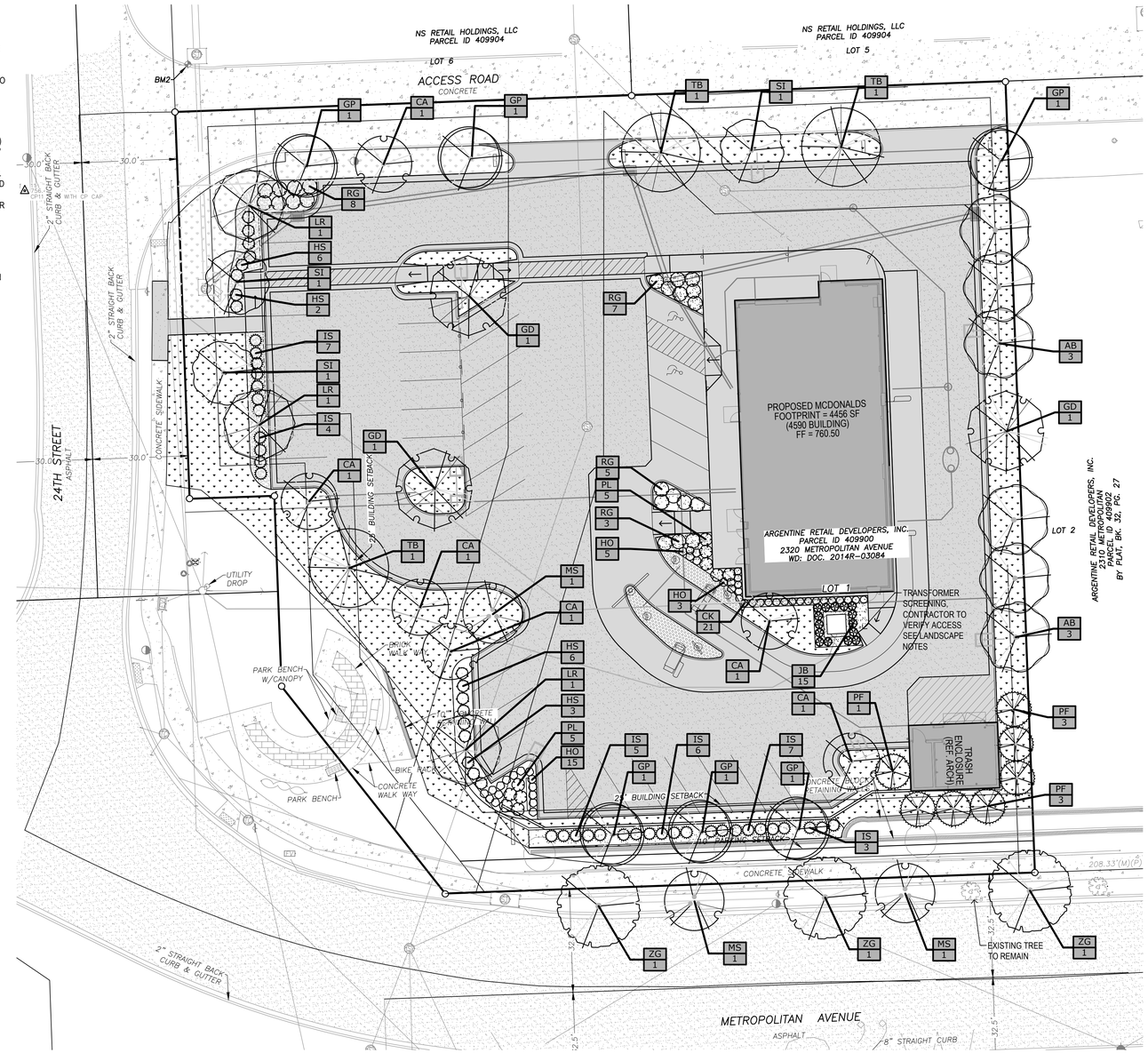

PLANT SCHEDULE

CODE	QTY	BOTANICAL / COMMON NAME	PLANTING SIZE	CONTAINER TYPE
DECIDUOUS TREES				
AB	6	Acer rubrum 'Brandywine' / Brandywine Red Maple	2" Cal.	B&B
GP	6	Ginkgo biloba 'PNI 2720' / Princeton Sentry® Maidenhair Tree	1.5" Cal.	B&B
GD	3	Gymnocladus dioicus 'Espresso' / Kentucky Coffeetree	2" Cal.	B&B
LR	3	Liquidambar styraciflua 'Rotundiloba' / Round-Lobed Sweet Gum	2" Cal.	B&B
TB	3	Tilia americana 'Boulevard' / Boulevard American Linden	2" Cal.	B&B
ZG	3	Zelkova serrata 'Green Vase' / Green Vase Japanese Zelkova	2" Cal.	B&B
EVERGREEN TREES				
PF	7	Pinus strobus 'Fastigiata' / Pyramidal White Pine	5` Ht.	B&B
TALL EVERGREEN TREE / SHRUB				
JB	15	Juniperus scopulorum 'Blue Arrow' / Blue Arrow Juniper	5` Ht.	Pot
UNDERSTORY DECIDUOUS TREE				
CA	6	Carpinus caroliniana / American Hornbeam	2" Cal.	B&B
MS	3	Malus x 'Spring Snow' / Spring Snow Crabapple	1.5" Cal.	B&B
SI	3	Syringa reticulata 'Ivory Silk' / Ivory Silk Japanese Tree Lilac	1.5" Cal.	B&B
SHRUBS				
HS	17	Diervilla x splendens 'El Madrigal' / Firefly Nightglow Bush Honeysuckle	2` Ht.	3 Gal. Pot
PL	10	Potentilla fruticosa 'Lundy' / Happy Face® Yellow Bush Cinquefoil	2` Ht.	3 Gal. Pot
RG	23	Rhus aromatica 'Gro-Low' / Gro-Low Fragrant Sumac	1` Ht.	3 Gal. Pot
EVERGREEN SHRUB				
IS	32	Ilex glabra 'Shamrock' / Shamrock Inkberry Holly	2` Ht.	3 Gal. Pot
GRASSES				
CK	21	Calamagrostis x acutiflora 'Karl Foerster' / Karl Foerster Feather Reed Grass	3` Ht.	1 Gal Pot
PERENNIALS				
HO	23	Hemerocallis x 'Stella de Oro' / Stella de Oro Daylily	6" HT	1 Gal Pot

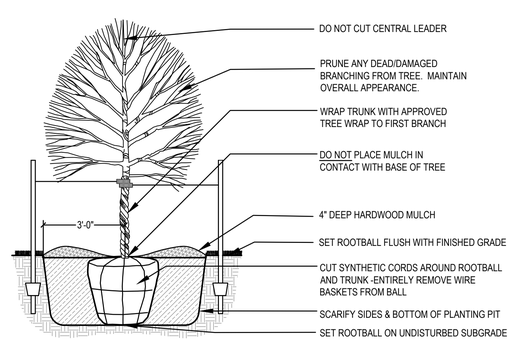

STAKING ORIENTATION

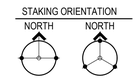

2 STAKES - 3" CAL. & LESS
3 STAKES - GREATER THAN 3" CAL.

USE HOSE GUARDS AROUND TRUNK ON STAKING WIRE. TIE WIRE TO STEEL POSTS PLACED OUTSIDE PLANT PIT..

LEAVE STAKES IN PLACE NO MORE THAN 1 YEAR FROM INSTALLATION. CONTRACTOR RESPONSIBLE FOR REMOVAL.

DECIDUOUS / EVERGREEN TREE PLANTING (TYP.)
SCALE: NOT TO SCALE

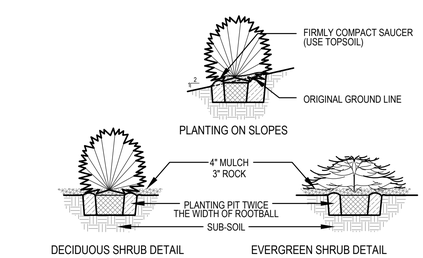

SHRUB PLANTING (TYP)
SCALE: NOT TO SCALE

GRAPHIC SCALE
20 0 10 20 40

REV	DATE	DESCRIPTION	BY
0	12/1/2025	PERMIT SET	JEJ

SEAL
DAVID B BENTZ LICENSED 27078 KANSAS PROFESSIONAL ENGINEER
DATE: 12/1/2025

BISHOP ENGINEERING +
3501 104th Street, Urbandale, IA 50322 Ph: 515-276-0467

PREPARED BY:

PREPARED FOR:
McDonald's USA, LLC

© 2025 McDonald's USA, LLC
These drawings and specifications are the confidential and proprietary property of McDonald's USA, LLC and shall not be copied or reproduced without written authorization. The contract documents were prepared for use on this specific site in conjunction with its issue date and project name as specified in the title block. Any other use of these drawings for reference or example on another project requires the services of properly licensed architects and engineers. Reproduction of the contract documents for reuse on another project is not authorized.

DRAWN BY	CLT
SITE ISSUE DATE	12-1-2025
REVIEWED BY	JEJ
DATE ISSUED	12-1-2025

TITLE: KANSAS CITY SITE PLAN
DESCRIPTION: LANDSCAPE PLAN
SITE ID: 1.40405
SITE ADDRESS: 2320 METROPOLITAN AVE. KANSAS CITY, KS 66106

SHEET NO. C5.1
BE #250004-2

12/1/2025 12:03:42 PM \\BE-FS01\PROJECTS\2LAND PROJECTS 2025\250004-2 MCDONALD'S - KANSAS CITY, KS - METROPOLITAN AVE - WEST SITE\DWG\C5 LANDSCAPE.DWG

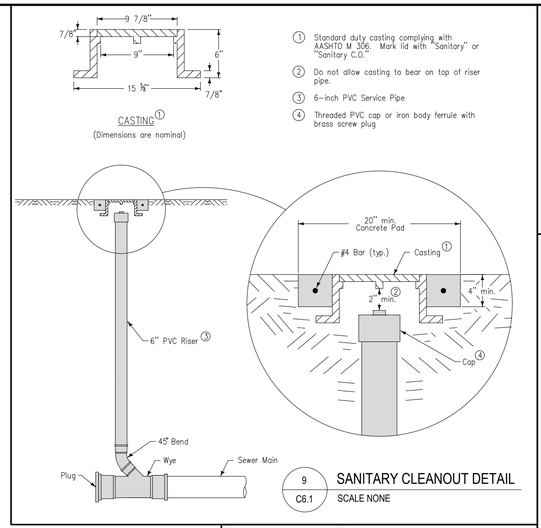

9 / C6.1 SANITARY CLEANOUT DETAIL
SCALE NONE

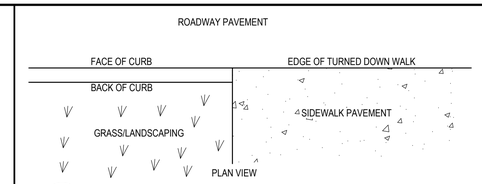

6 / C6.1 CURB & GUTTER / TURNED DOWN WALK TRANSITION DETAIL
SCALE NONE

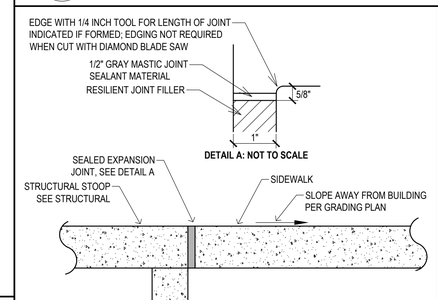

7 / C6.1 STRUCTURAL STOOP / SIDEWALK TRANSITION DETAIL
SCALE NONE

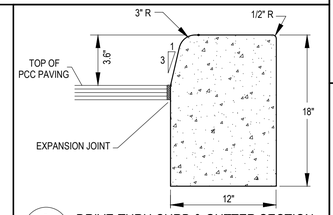

5 / C6.1 DRIVE-THRU CURB & GUTTER SECTION
SCALE NONE

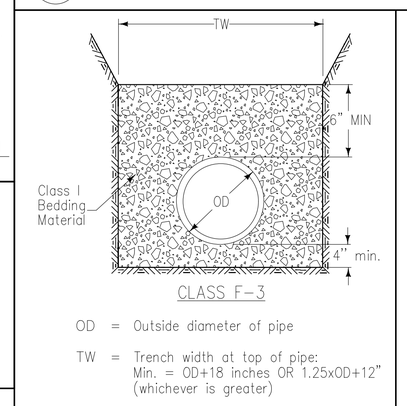

8 / C6.1 PVC & N-12 PIPE BEDDING
SCALE NONE

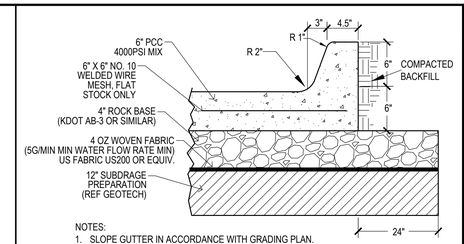

NOTES:
1. SLOPE GUTTER IN ACCORDANCE WITH GRADING PLAN.
2. INSTALL CURB & GUTTER INTERGRAL WITH PAVING.
3. PCC PAVEMENT SHALL HAVE A MINIMUM 28 DAY COMPRESSIVE STRENGTH OF 4,000 PSI.

1 / C6.1 TYPE 1 PAVEMENT SECTION
SCALE NONE

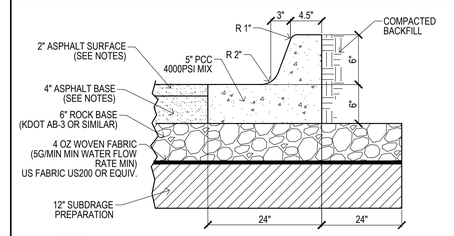

NOTES:
1. SLOPE GUTTER IN ACCORDANCE WITH GRADING PLAN.
2. INSTALL 24" WIDE PCC CURB & GUTTER AS SHOWN ON PLAN.
3. 6" ASPHALT SHALL BE:
   2" SURFACE COARSE: 1/2" MIX, 65% CRUSH, TYPE A QUALITY, PG 58-28S BINDER
   4" SURFACE COARSE: 3/4" MIX, 65% CRUSH, TYPE A QUALITY, PG 58-28S BINDER
4. BID ALT: MATCH TYPE 1 PAVEMENT SECTION

2 / C6.1 TYPE 2 PAVEMENT SECTION
SCALE NONE

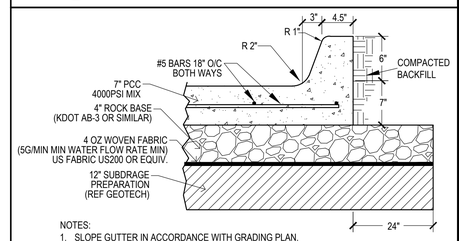

NOTES:
1. SLOPE GUTTER IN ACCORDANCE WITH GRADING PLAN.
2. INSTALL CURB & GUTTER INTERGRAL WITH PAVING.
3. PCC PAVEMENT SHALL HAVE A MINIMUM 28 DAY COMPRESSIVE STRENGTH OF 4,000 PSI.
4. ALL REINFORCEMENT SHALL BE EPOXY COATED.

3 / C6.1 TYPE 3 PAVEMENT SECTION
SCALE NONE

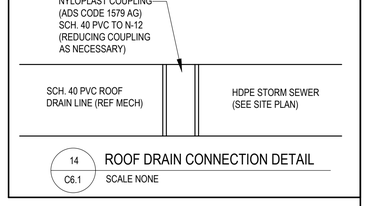

14 / C6.1 ROOF DRAIN CONNECTION DETAIL
SCALE NONE

NOTES:
1. SIDEWALK CROSS SLOPE SHALL BE 1.5% DESIGN, 2% MAX
2. RAMP RUNNING SLOPE SHALL BE 6.25% DESIGN, 8.33% MAX

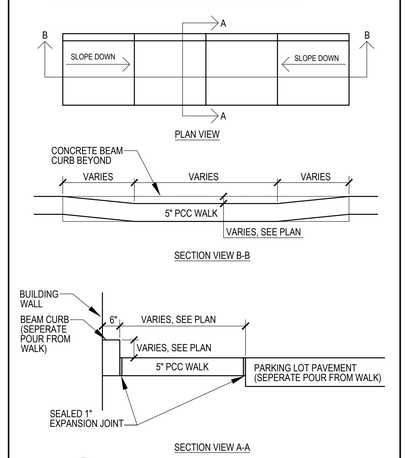

11 / C6.1 RAMP ALONG BUILDING DETAIL
SCALE NONE

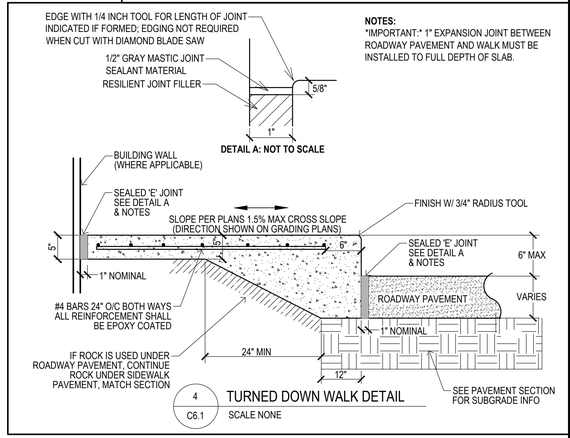

NOTES:
IMPORTANT: 1" EXPANSION JOINT BETWEEN ROADWAY PAVEMENT AND WALK MUST BE INSTALLED TO FULL DEPTH OF SLAB.

4 / C6.1 TURNED DOWN WALK DETAIL
SCALE NONE

REV	DATE	DESCRIPTION	BY
0	12/1/2025	PERMIT SET	JEJ

SEAL
DAVID B BENTZ LICENSED 27078 KANSAS PROFESSIONAL ENGINEER
DATE: 12/1/2025

PREPARED BY:
BISHOP ENGINEERING +
3501 104th Street, Urbandale, IA 50322 Ph: 515-276-0467

PREPARED FOR:
McDonald's USA, LLC

© 2025 McDonald's USA, LLC
These drawings and specifications are the confidential and proprietary property of McDonald's USA, LLC and shall not be copied or reproduced without written authorization. The contract documents were prepared for use on this specific site in conjunction with its issue date and are not suitable for use on any other site or in any other jurisdiction. Re-use of these drawings for reference or example on another project requires the services of properly licensed architects and engineers. Reproduction of the contract documents for re-use on another project is not authorized.

DRAWN BY	STD ISSUE DATE	REVIEWED BY	DATE ISSUED
CLT	12-1-2025	JEJ	12-1-2025

TITLE: KANSAS CITY SITE PLAN
DESCRIPTION: DETAILS SHEET
SITE ID: 140405
SITE ADDRESS: 2320 METROPOLITAN AVE, KANSAS CITY, KS 66106
SHEET NO. C6.1
BE #250004-2

\\BE-FS01\PROJECTS\LAND PROJECTS 2025\250004-2 MCDONALD'S - KANSAS CITY, KS - WEST SITE\DWG\C6 DETAILS.DWG

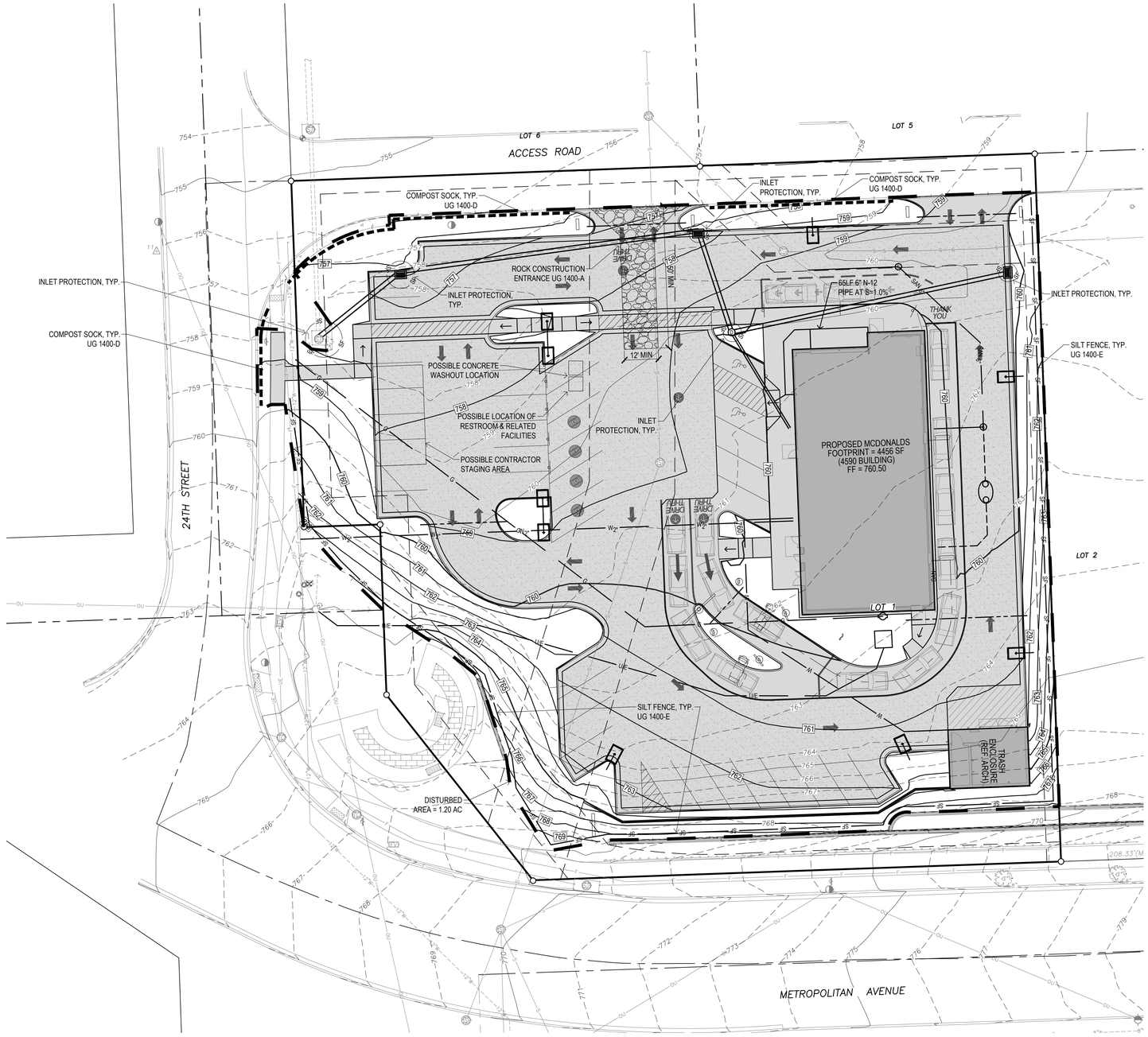

EROSION CONTROL NOTES:

1. SEE SUPPLEMENTAL DETAIL STORM WATER POLLUTION PLAN NARRATIVE FOR ALL EROSION CONTROL MEASURES, ADDITIONAL DETAILS AND NOTE. ADDITIONAL NOTES AND MEASURES IN NARRATIVE SHALL BE CONSIDERED INCIDENTAL AND SHALL BE INCLUDED IN THE ORIGINAL BID.
2. SWPPP PLAN AND NARRATIVE ARE CONSIDERED A LIVING DOCUMENT AND WILL NEED PERIODIC UPDATES AND ADJUSTMENTS AS NECESSARY DEPENDING ON SITE CONDITIONS TO ASSURE COMPLIANCE WITH NPDES GENERAL PERMIT NO. 2. IT IS THE CONTRACTOR'S RESPONSIBILITY TO UPDATE THE SWPPP AND IMPLEMENT ANY AND ALL MEASURES NECESSARY TO COMPLY WITH SAID PERMIT NO. 2.
3. INSTALL PERIMETER SILT FENCE AS SHOWN ON PLANS PRIOR TO CONSTRUCTION.
4. INSTALL INTAKE PROTECTION WITH SILT FENCE IMMEDIATELY AFTER STORM SEWER CONSTRUCTION.
5. INSTALL FINISHED PAVING INLET PROTECTION IMMEDIATELY AFTER PAVING IS COMPLETED AROUND INTAKE.
6. OTHER EROSION CONTROL TYPES MAY NOT BE SUBSTITUTED FOR SILT FENCE.
7. CONTRACTOR SHALL BE RESPONSIBLE FOR SUPPLYING A CONCRETE WASHOUT IN ACCORDANCE WITH NPDES GENERAL PERMIT NO. 2 DURING ALL CONCRETE WORK.
8. CONTRACTOR SHALL BE RESPONSIBLE FOR SUPPLYING TEMPORARY RESTROOM FACILITIES. SANITARY WASTE SHALL BE DISPOSED OF PER ALL FEDERAL, STATE AND LOCAL REGULATIONS.
9. CONTRACTOR SHALL BE RESPONSIBLE FOR ENSURING ALL TOPSOIL REQUIREMENTS OF NPDES GENERAL PERMIT NO. 2 ARE MET.
10. THIS PROJECT INCLUDES SAWCUTTING OR CONCRETE GRINDING SO PROTECTION OF STORM SEWERS AND DRAINAGE WAYS WILL NEED TO BE PROVIDED FROM SLURRY FROM THE CONCRETE OPERATIONS TO DISCHARGE OFFSITE. SEE SWPPP SHEET AND NARRATIVE FOR ADDITIONAL DETAILS.
11. CONTRACTOR SHALL PROVIDE APPROPRIATE CONTROLS TO PREVENT DISCHARGES FROM ANY AND ALL DEWATERING ACTIVITIES.
12. SEE LANDSCAPE PLAN FOR FINAL STABILIZATION INCLUDING SODDING AREAS.
13. PER NPDES GENERAL PERMIT NO. 2, IF CONSTRUCTION ACTIVITY IS NOT PLANNED FOR AT LEAST 14 DAYS, ALL DISTURBED AREAS SHALL BE STABILIZED IMMEDIATELY BY TEMPORARY EROSION CONTROL MEASURES.
14. THE FOLLOWING DISCHARGES ARE PROHIBITED: WASTEWATER FROM WASHOUT AND CLEANOUT OF STUCCO, PAINT, FORM RELEASE OIL, CURING COMPOUNDS AND OTHER CONSTRUCTION MATERIALS, FUEL, OILS OR OTHER POLLUTANTS USED IN VEHICLE AND EQUIPMENT OPERATION AND MAINTENANCE, AND SOAPS OR SOLVENTS USED IN VEHICLE AND EQUIPMENT WASHING
15. EXCAVATED MATERIAL THAT IS NOT IMMEDIATELY LOADED AND HAULED OFF SITE SHALL BE STOCKPILED ON SITE. CONTRACTOR SHALL PROVIDE THE APPROPRIATE BMP (SILT FENCE, COMPOST SOCK, GRAVEL FILTER BAGS, WADDLES, ETC.) FULLY SURROUNDING THE STOCKPILE AREA TO PROTECT ADJACENT INLETS OR AREAS, ETC. UNTIL SUCH TIME THAT STOCKPILE IS REMOVED FROM THE SITE.
16. GOOD HOUSEKEEPING, INCLUDING SPILL RESPONSE, SHALL BE PERFORMED IN ACCORDANCE WITH THE KANSAS CITY CHAPTER OF THE AMERICAN PUBLIC WORKS ASSOCIATION STANDARD SPECIFICATIONS, SECTION 2150.
17. THE CONTRACTOR SHALL INSPECT EROSION CONTROL DEVICES EVERY 7 DAYS AND WITHIN 24 HOURS OF A STORM OF 0.5 INCHES OR MORE. THE CONTRACTOR SHALL REPAIR DAMAGE, CLEAN OUT SEDIMENT, AND ADD ADDITIONAL EROSION CONTROL DEVICES AS NEEDED, AS SOON AS PRACTICABLE, AFTER INSPECTION.
18. THE CONTRACTOR SHALL BE RESPONSIBLE FOR MAINTAINING EROSION CONTROL DEVICES AND REMOVING SEDIMENT UNTIL A MINIMUM OF 70% OF PERMANENT VEGETATION HAS BECOME STABILIZED & ESTABLISHED. EROSION CONTROL DEVICES SHALL REMAIN IN PLACE UNTIL THE 70% ESTABLISHED VEGETATION IS MET, OR THE DURATION OF THE PROJECT, WHICHEVER IS THE LATER DATE.

EROSION CONTROL REMOVAL NOTES:

1. AFTER FINAL STABILIZATION HAS OCCURED, AS DEFINED IN NPDES GENERAL PERMIT NO. 2, CONTRACTOR SHALL BE RESPONSIBLE FOR THE REMOVAL OF ALL TEMPORARY EROSION CONTROL DEVICES INCLUDING, BUT NOT LIMITED TO: SILT FENCE, INLET PROTECTION, AND TEMPORARY STANDPIPES.

GRAPHIC SCALE

20 0 10 20 40

REV.	DATE	DESCRIPTION	BY
0	12/1/2025	PERMIT SET	JEJ

SEAL

DAVID B BENTZ LICENSED 27078 KANSAS PROFESSIONAL ENGINEER

DATE: 12/1/2025

PREPARED BY:

BISHOP ENGINEERING +

3501 104th Street, Urbandale, IA 50322 Ph: 515-276-0467

PREPARED FOR:

McDonald's USA, LLC

© 2025 McDonald's USA, LLC

These drawings and specifications are the confidential and proprietary property of McDonald's USA, LLC, and shall not be copied or reproduced without written authorization. The contract documents were prepared for use on this specific site in conjunction with its issue date and are intended for use only on this project. McDonald's USA, LLC does not permit these drawings for reference or example on another project requires the services of properly licensed architects and engineers. Reproduction of the contract documents for reuse on another project is not authorized.

DRAWN BY: CLT

STD ISSUE DATE: 12-1-2025

REVIEWED BY: JEJ

DATE ISSUED: 12-1-2025

TITLE: KANSAS CITY SITE PLAN

DESCRIPTION: SWPPP

SITE ADDRESS: 2320 METROPOLITAN AVE, KANSAS CITY, KS 66106

SITE ID: 140405

SHEET NO.: C7.1

BE #250004-2

12/1/2025 11:56:20 AM \\BE-FS01\PROJECTS2\LAND PROJECTS 2025\250004-2 MCDONALD'S - KANSAS CITY, KS - METROPOLITAN AVE - WEST SITE\DWG\C7 SWPPP.DWG