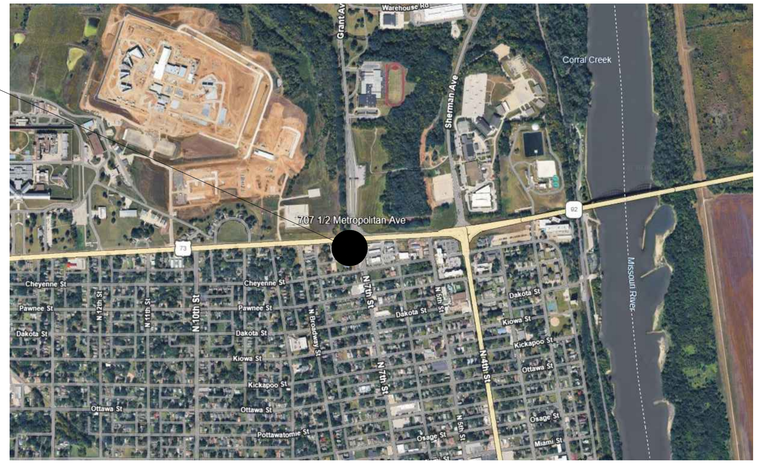

ALL SIGNAGE WILL BE UNDER SEPARATE PERMIT.
GENERAL CONTRACTOR RESPONSIBLE FOR OBTAINING ALL NECESSARY BUILDING PERMITS AND HEALTH APPROVALS

VICINITY MAP

N.T.S.

McDONALD'S RESTAURANT - BB20 - 4584 WW-HB

STATE SITE CODE: **150404**
STREET ADDRESS: 707 1/2 METROPOLITAN AVE
CITY: **LEAVENWORTH**
COUNTY: LEAVENWORTH
STATE: KANSAS
DENVER FIELD OFFICE

DESIGNER OF RECORD:

DISCIPLINE:	NAME:	COMPANY, ADDRESS	ADDRESS	PHONE#:
ARCHITECT:	CARL L LINGLE	LINGLE DESIGN GROUP, INC.	158 WEST MAIN STREET, LENA, IL 61048	815-369-9155
CIVIL:	ANDY KRUSE	OLSSON ENGINEERING	302 SOUTH 4TH STREET, SUITE 110, MANGATTAN, KS 66502	785-539-6901
STRUCTURAL:	BRAD YOUNG	BRAD YOUNG & ASSOCIATES, INC.	345 POLLASKY AVE, CLOVIS, CA 93612	559-323-9600
MECHANICAL:	JOE THOMAS	WCW ENGINEERING, INC.	760 CREEL DRIVE, WOOD DALE IL 60191	630-595-8800
PLUMBING:	JOE THOMAS	WCW ENGINEERING, INC.	760 CREEL DRIVE, WOOD DALE IL 60191	630-595-8800
ELECTRICAL:	BILL HERZKE	DICKERSON ENGINEERING INC.	3343 N. RIDGE AVENUE, ARLINGTON HEIGHTS IL 60004	847-966-0290

CONSTRUCTION PROJECT MANAGER:

DISCIPLINE:	NAME:	COMPANY, ADDRESS	ADDRESS	PHONE#:
MANAGER:	ALBERTO DEL TORO	McDONALDS CORPORATION	110 N. CARPENTER STREET, CHICAGO, IL 60607-2101	208-751-4851
PROJECT MANAGER:	JOE KERCHNER	LINGLE DESIGN GROUP, INC.	158 WEST MAIN STREET, LENA IL 61048	815-369-9155

BUILDING INFORMATION

BUILDING CODES:

BUILDING CODE	2018 INTERNATIONAL BUILDING CODE
MECHANICAL CODE	2018 INTERNATIONAL MECHANICAL CODE
ELECTRICAL CODE	2017 NATIONAL ELECTRICAL CODE
PLUMBING CODE	2018 INTERNATIONAL PLUMBING CODE
FIRE/ LIFE SAFETY CODE:	2018 INTERNATIONAL FIRE CODE
ENERGY CODE:	2018 INTERNATIONAL ENERGY CONSERVATION CODE
ACCESSIBILITY CODE	ANSI A117.1 / ADA

STRUCTURE:

WOOD FRAMED LOAD BEARING WALLS, WOOD ROOF FRAMING

UTILITIES

ELECTRIC GRILLS, ELECTRIC FRYERS, GAS WATER HEATER, GAS HVAC

BUILDING DATA:

OCCUPANCY:	USE GROUP A2 (RESTAURANT)
CONSTRUCTION TYPE:	V-B NON-SPRINKLED
NUMBER OF STORIES:	SINGLE STORY
BUILDING HEIGHT:	18'-9 1/2"
GROSS BUILDING AREA:	3,690 S.F.

DESIGN LOADS:

GROUND SNOW LOAD:	30 PSF
WIND SPEED:	110 MPH (EXPOSURE B)
SEISMIC DESIGN CATEGORY:	B
SOIL BEARING CAPACITIES:	2000 PSF MIN

LIFE SAFETY SYSTEMS:

EMERGENCY LIGHTING:	YES
EXIT SIGNS:	YES
FIRE ALARM:	YES (DEFERRED SUBMITTAL)
DUCT SMOKE DETECTORS W/ AUDIBLE/VISIBLE DEVICE:	YES
FIRE SPRINKLERS:	NO
SPRINKLER FLOW/TAMPER SWITCH W/ AUDIBLE/VISIBLE DEVICE:	NO
CO2 DETECTION SYSTEM W/ AUDIBLE/VISIBLE DEVICE:	YES
PANIC HARDWARE:	YES

STATEMENT OF COMPLIANCE:

I HEREBY CERTIFY THAT THESE PLANS WERE PREPARED BY ME OR UNDER MY DIRECT SUPERVISION AND THAT I AM A DULY REGISTERED PROFESSIONAL UNDER THE LAWS OF THE STATE OF KANSAS.

CARL LINGLE LICENSED 7997 KANSAS ARCHITECT

EXPIRES: 06-30-26 DATE: 04-08-26

I HAVE PREPARED OR CAUSED TO BE PREPARED UNDER MY DIRECT SUPERVISION, THE ATTACHED PLANS AND SPECIFICATIONS AND STATE THAT, TO THE BEST OF MY KNOWLEDGE AND BELIEF AND AND TO THE EXTENT OF MY CONTRACTUAL OBLIGATION, THEY ARE IN COMPLIANCE WITH THE KANSAS ACCESSIBILITY CODE.

SYMBOL LEGEND:

6 A4.0 — SECTION TAG
6 A4.0 — DETAIL TAG
T/ SLAB ELEV. 0'-0" — ELEVATION TAG
4 — DOOR TAG
W3 — WINDOW TAG
DINING ROOM 103 — ROOM NAME & NUMBER
A — PARTITION TAG
X — KEY NOTE
N — CONSTRUCTION PLAN — DRAWING TITLE — Scale: 3/16" = 1'-0"

DRAWING INDEX

REVISIONS	SHEET#	SHEET NAME
	T1.0	COVER SHEET
2, 1	T2.0	EGRESS AND OCCUPANCY PLAN
1	T3.0	ACCESSIBLE SIGNAGE PLAN
	T4.0	MCDONALD'S SIGNAGE PLAN
1	T5.0	IP-CCTV PLAN
	G1.0	GENERAL NOTES
	G2.0	GENERAL ACCESSIBILITY NOTES
	CIVIL	
		REFER TO CIVIL COVER SHEET
	ARCHITECTURAL	
1	A0.2	TRASH ENCLOSURE PLAN & DETAILS
2, 1	A1.0	CONSTRUCTION PLAN, NOTES & DETAILS
2, 1	A1.2	REFLECTED CEILING PLAN
1	A1.3	ROOF PLAN
1	A1.4	FINISH PLAN & SCHEDULES
2	A2.0	EXTERIOR ELEVATIONS
2, 1	A2.1	EXTERIOR ELEVATIONS
1	A4.0	ENLARGED RESTROOM PLAN & DETAILS
1	A4.1	EXTERIOR DETAILS
2	A4.2	ENLARGED FRONT COUNTER PLAN & ELEVATIONS
2	A4.3	ENLARGED FRONT COUNTER SECTIONS & DETAILS
	A4.4	CEILING & ROOF DETAILS
2, 1	A5.0	WALL SECTIONS & DETAILS
2	A5.1	WALL SECTIONS & DETAILS
2	A5.2	WALL SECTIONS & DETAILS
2	A5.3	WALL SECTIONS & DETAILS
2, 1	A6.0	DOOR & WINDOW SCHEDULES
	A6.1	DETAILS
	STRUCTURAL	
2	S1.0	FOUNDATION PLAN
2	S1.2	FRAMING PLAN
2	S2.0	FOUNDATION SECTIONS
2	S3.0	FRAMING SECTIONS
2	S3.1	STEEL DETAILS
2	S3.2	DETAILS
	S4.0	GENERAL NOTES
	MECHANICAL	
1	M1.0	ROOF PLAN
2, 1	M1.2	DUCTWORK PLAN
1	M1.4	MECH. PIPING PLAN
	M2.0	EXHAUST HOODS
	M3.0	DETAILS
	M4.0	GENERAL NOTES
1	M4.1	SCHEDULES
	PLUMBING	
1	P1.0	DOMESTIC WATER PIPING
1	P1.2	VENT & STORM PIPING PLAN
1	P1.3	UNDERGROUND PLUMBING
	P1.4	UNDERGROUND ROUGH-IN
	P1.6	OVERHEAD ROUGH-IN
	P2.0	DOMESTIC WATER ISOMETRIC
	P2.1	WASTE & VENT ISOMETRIC
	P2.2	STORM ISOMETRIC
	P3.0	DETAILS
	P4.0	GENERAL NOTES
	P4.1	SCHEDULES
	ELECTRICAL	
	E1.0	POS RISER DIAGRAM
1	E1.1	ROUGH-IN FLOOR PLAN
2, 1	E2.0	LIGHTING PLAN
	E2.1	ELECTRICAL ROOF PLAN
1	E3.0	ROUGH-IN SCHEDULE
1	E3.1	NOTES & DETAILS
1	E3.2	INTERLOCK DIAGRAMS
1	E4.0	WIRING DETAILS
2, 1	E4.1	LIGHTING CONTROLS
2, 1	E4.2	PANEL SCHEDULES & ONE LINE
	KITCHEN	
	K1.0	KITCHEN COVER SHEET
1	K2.0	KITCHEN EQUIPMENT PLAN & ELEVATIONS
1	K2.1	KITCHEN SCHEDULE
	DECOR	
2		REFER TO DECOR COVER SHEET

LINGLE DESIGN GROUP INC
158 WEST MAIN STREET
LENA, IL 61048
815.369.9155
1764 BLAKE ST
DENVER, CO 8020
303.974.5873
WWW.LINGLEDESIGN.COM

© ALL DRAWINGS AND WRITTEN MATERIAL CONTAINED HEREIN ARE THE PROPERTY OF THE LINGLE DESIGN GROUP, INC. THEY MAY NOT BE REVISED, COPIED, REUSED, OR DISCLOSED IN ANY MANNER WITHOUT WRITTEN AUTHORIZATION FROM THE ARCHITECT.

CARL LINGLE LICENSED 7997 KANSAS ARCHITECT

04-08-26

STATE ID: 150404
PROJECT #: 26-028
NATIONAL #: 44655
DRAWN BY: CR
CHECKED BY: JK

DATE:
04/08/26 - PERMIT / BID SET

REVISIONS
1 05/07/26 - QC COMMENTS/ADA UPDATE
2 06/22/26 - CITY COMMENTS / DECOR

CLIENT
McDonald's USA, LLC

PROTOTYPE
BB20 4584 WW-HB
ISSUE DATE 02/25

ADDRESS
707 1/2 METROPOLITAN AVE
LEAVENWORTH, KS 66048

SHEET TITLE
COVER SHEET

SHEET NUMBER:
T1.0

LEGEND

→	INDICATES 36" MIN. EGRESS PATH UNLESS NOTED OTHERWISE

OCCUPANCY ALLOWANCE

BUILDING CODE TABLE 1004.5
MAXIMUM FLOOR AREA ALLOWANCES PER OCCUPANT

FUNCTION OF SPACE	LOAD FACTOR	AREA	CALCULATED OCCUPANTS	LEGEND
ACCESSORY STORAGE AREAS, MECHANICAL EQUIPMENT ROOM	300 GROSS	568 SF	2	
ASSEMBLY WITH FIXED SEATS	SEE PLAN	1	32	
ASSEMBLY WITHOUT FIXED SEATING STANDING SPACE	5 NET	116 SF	24	
BUSINESS AREAS	100 GROSS	67 SF	1	
KITCHEN, COMMERCIAL (BASED ON FULL KITCHEN STAFF)	200 GROSS		17	
TOTAL OCCUPANCY ALLOWANCE			76	

TOTAL SEATING:	32	NOTE:
TOTAL REQUIRED ACCESSIBLE SEATING (5% OF TOTAL):	2	A. SEATING CONFIGURATION IS SHOWN FOR REFERENCE ONLY. ACTUAL CONFIGURATION MAY VARY.
ACCESSIBLE SEATING PROVIDED:	2	B. SEE SHEET G2.0 & A4.0 FOR ADA CLEARANCES

LINGLE DESIGN GROUP INC
158 WEST MAIN STREET
LENA, IL 61048
815.369.9155
1764 BLAKE ST
DENVER, CO 8020
303.974.5873
WWW.LINGLEDESIGN.COM

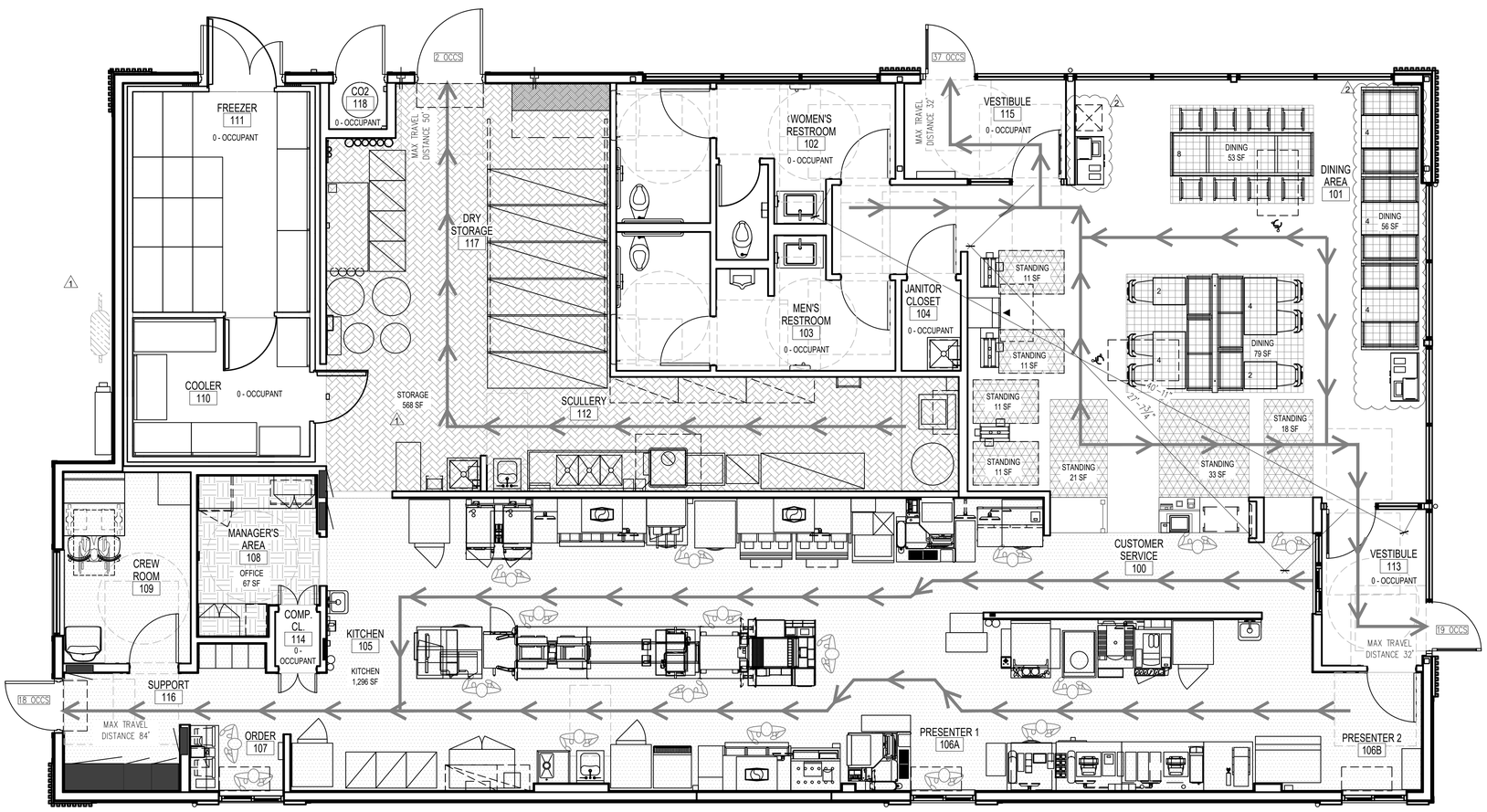

EGRESS AND OCCUPANCY PLAN

Scale:1/4" = 1'-0"

© ALL DRAWINGS AND WRITTEN MATERIAL CONTAINED HEREIN ARE THE PROPERTY OF THE LINGLE DESIGN GROUP, INC. THEY MAY NOT BE REVISED, COPIED, REUSED, OR DISCLOSED IN ANY MANNER WITHOUT WRITTEN AUTHORIZATION FROM THE ARCHITECT.

CARL LINGLE LICENSED 7997 KANSAS ARCHITECT

04-08-26

STATE ID: 150404
NATIONAL #: 44655
PROJECT #: 26-028
DRAWN BY: CR
CHECKED BY: JK

DATE:
04/08/26 - PERMIT / BID SET

REVISIONS
1 05/07/26 - QC COMMENTS/ADA UPDATE
2 06/22/26 - CITY COMMENTS / DECOR

CLIENT
McDonald's USA, LLC

PROTOTYPE
BB20 4584 WW-HB
ISSUE DATE 02/25

ADDRESS
707 1/2 METROPOLITAN AVE
LEAVENWORTH, KS 66048

SHEET TITLE
EGRESS AND OCCUPANCY PLAN

SHEET NUMBER:
T2.0

THE EXACT MOUNTING LOCATION AND MOUNTING HEIGHT OF THIS SIGN IS NOT SPECIFIED BY THE A.D.A., BUT IT SHOULD BE EASILY VISIBLE FROM A CAR IN THE DRIVE-THRU WINDOW.

EXTERIOR

EXTERIOR

DECAL – WHITE ON CHARCOAL 4.5"X4.5" ON LOWER PORTION OF DRIVE-THRU CASH WINDOW (INOPERABLE SIDE). SEE GENERAL NOTE BELOW

DECAL – WHITE ON CLEAR 4.5"X4.5" CUSTOMER ENTRIES ON INTERIOR VESTIBULE GLAZING AT DINING ROOM DOOR. ALIGN TOP OF DECAL WITH ADJACENT TACTILE SIGNAGE. SEE GENERAL NOTE BELOW.

DECAL – WHITE ON CHARCOAL 8"X5", FOR CUSTOMER AREAS. SEE GENERAL NOTE BELOW.

EXTERIOR EXTERIOR INTERIOR

DRIVE THRU SIGNAGE

EXTERIOR EXTERIOR

VESTIBULE SIGNAGE

PICK UP SIGNAGE

3 CUSTOMER ASSISTANCE SIGNAGE

N.T.S.

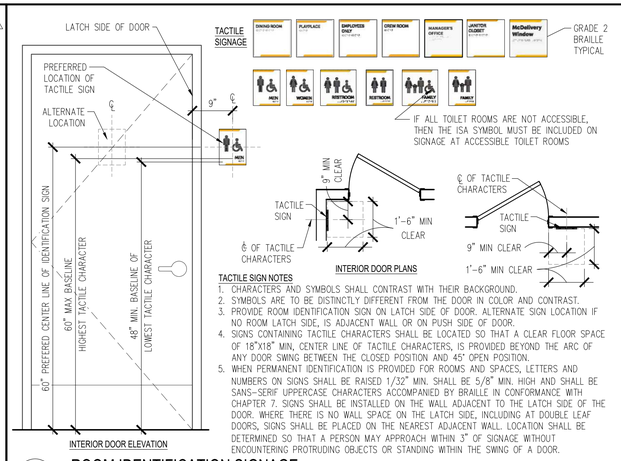

TACTILE SIGN NOTES

1. CHARACTERS AND SYMBOLS SHALL CONTRAST WITH THEIR BACKGROUND.
2. SYMBOLS ARE TO BE DISTINCTLY DIFFERENT FROM THE DOOR IN COLOR AND CONTRAST.
3. PROVIDE ROOM IDENTIFICATION SIGN ON LATCH SIDE OF DOOR. ALTERNATE SIGN LOCATION IF NO ROOM LATCH SIDE, IS ADJACENT WALL OR ON PUSH SIDE OF DOOR.
4. SIGNS CONTAINING TACTILE CHARACTERS SHALL BE LOCATED SO THAT A CLEAR FLOOR SPACE OF 18"X18" MIN, CENTER LINE OF TACTILE CHARACTERS, IS PROVIDED BEYOND THE ARC OF ANY DOOR SWING BETWEEN THE CLOSED POSITION AND 45° OPEN POSITION.
5. WHEN PERMANENT IDENTIFICATION IS PROVIDED FOR ROOMS AND SPACES, LETTERS AND NUMBERS ON SIGNS SHALL BE RAISED 1/32" MIN. SHALL BE 5/8" MIN. HIGH AND SHALL BE SANS-SERIF UPPERCASE CHARACTERS ACCOMPANIED BY BRAILLE IN CONFORMANCE WITH CHAPTER 7. SIGNS SHALL BE INSTALLED ON THE WALL ADJACENT TO THE LATCH SIDE OF THE DOOR. WHERE THERE IS NO WALL SPACE ON THE LATCH SIDE, INCLUDING AT DOUBLE LEAF DOORS, SIGNS SHALL BE PLACED ON THE NEAREST ADJACENT WALL. LOCATION SHALL BE DETERMINED SO THAT A PERSON MAY APPROACH WITHIN 3" OF SIGNAGE WITHOUT ENCOUNTERING PROTRUDING OBJECTS OR STANDING WITHIN THE SWING OF A DOOR.

2 ROOM IDENTIFICATION SIGNAGE

N.T.S.

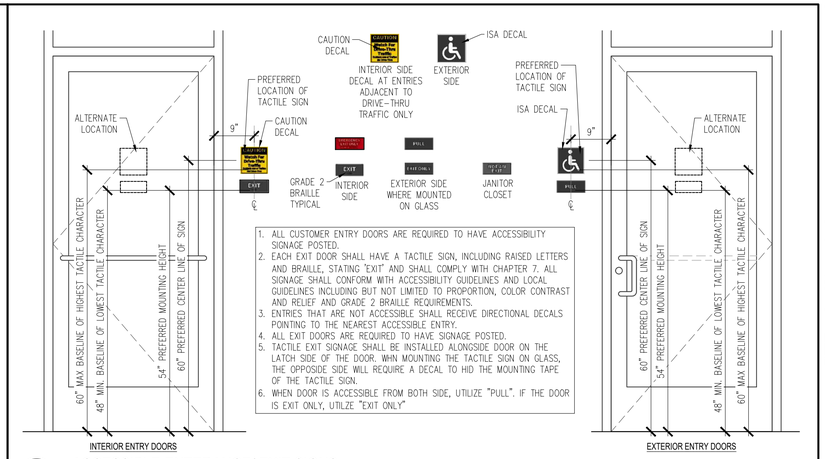

1. ALL CUSTOMER ENTRY DOORS ARE REQUIRED TO HAVE ACCESSIBILITY SIGNAGE POSTED.
2. EACH EXIT DOOR SHALL HAVE A TACTILE SIGN, INCLUDING RAISED LETTERS AND BRAILLE, STATING "EXIT" AND SHALL COMPLY WITH CHAPTER 7. ALL SIGNAGE SHALL CONFORM WITH ACCESSIBILITY GUIDELINES AND LOCAL GUIDELINES INCLUDING BUT NOT LIMITED TO PROPORTION, COLOR CONTRAST AND RELIEF AND GRADE 2 BRAILLE REQUIREMENTS.
3. ENTRIES THAT ARE NOT ACCESSIBLE SHALL RECEIVE DIRECTIONAL DECALS POINTING TO THE NEAREST ACCESSIBLE ENTRY.
4. ALL EXIT DOORS ARE REQUIRED TO HAVE SIGNAGE POSTED.
5. TACTILE EXIT SIGNAGE SHALL BE INSTALLED ALONGSIDE DOOR ON THE LATCH SIDE OF THE DOOR. WHN MOUNTING THE TACTILE SIGN ON GLASS, THE OPPOSIDE SIDE WILL REQUIRE A DECAL TO HID THE MOUNTING TAPE OF THE TACTILE SIGN.
6. WHEN DOOR IS ACCESSIBLE FROM BOTH SIDE, UTILIZE "PULL". IF THE DOOR IS EXIT ONLY, UTILIZE "EXIT ONLY"

1 ACCESSIBLE ENTERANCE/ EXIT SIGNS

N.T.S.

GENERAL NOTE: GC TO PROVIDE SIGNAGE PACKAGE AND INSTALL SIGNS AT LOCATIONS AND POSITIONS INDICATED IN PACKAGE OR AS REQUIRED BY LOCAL CODES. SIGNAGE PACKAGE SUPPLIED BY: FRANKE SUPPLY 1-800-423-5247, FAX: 1-877-538-6882, WWW.FRANKESUPPLY.COM, EMAIL: fs-frankesupply.us@franke.com

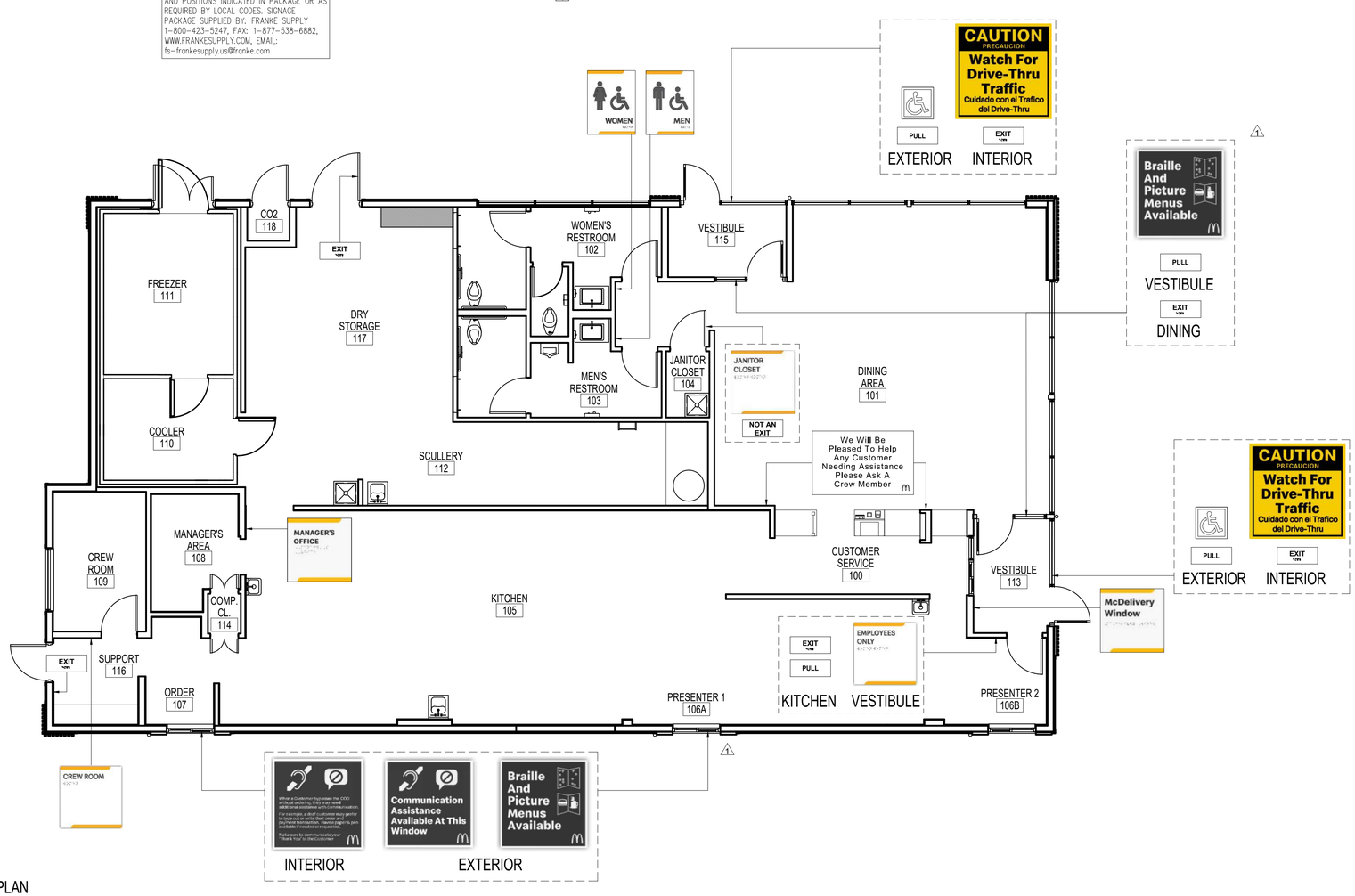

ACCESSIBLITY SIGNAGE PLAN

Scale: 3/16" = 1'-0"

LINGLE DESIGN GROUP INC
158 WEST MAIN STREET
LENA, IL 61048
815.369.9155
1764 BLAKE ST
DENVER, CO 8020
303.974.5873
WWW.LINGLEDESIGN.COM

© ALL DRAWINGS AND WRITTEN MATERIAL CONTAINED HEREIN ARE THE PROPERTY OF THE LINGLE DESIGN GROUP, INC. THEY MAY NOT BE REVISED, COPIED, REUSED, OR DISCLOSED IN ANY MANNER WITHOUT WRITTEN AUTHORIZATION FROM THE ARCHITECT.

CARL LINGLE LICENSED 7997 KANSAS ARCHITECT

04-08-26

STATE ID: 150404
PROJECT #: 26-028
NATIONAL #: 44655
DRAWN BY: CR
CHECKED BY: JK

DATE:
04/08/26 - PERMIT / BID SET

REVISIONS
1 05/07/26 - QC COMMENTS/ADA UPDATE
2 06/22/26 - CITY COMMENTS / DECOR

CLIENT
McDonald's USA, LLC

PROTOTYPE
BB20 4584 WW-HB
ISSUE DATE 02/25

ADDRESS
707 1/2 METROPOLITAN AVE
LEAVENWORTH, KS 66048

SHEET TITLE
ACCESSIBLE SIGNAGE PLAN

SHEET NUMBER:
T3.0

MCDONALD'S SIGNAGE SCHEDULE

TAG	QTY.	DESCRIPTION	PROVIDER	COMMENTS
BH1	1	RESTAURANT DELIVERY SIGN – SUPPLIER	FRANKE	SEE SHEETS A2.0 & A2.1 FOR ADDITIONAL INFORMATION
BH2	1	RESTAURANT DELIVERY SIGN – CREW	FRANKE	SEE SHEETS A2.0 & A2.1 FOR ADDITIONAL INFORMATION
BH4	1	REAR DOOR – CREW SAFETY SIGN	FRANKE	
BH5	1	ELECTRICAL PANEL WARNING SIGN	FRANKE	SEE SHEET T3.0 FOR ADDITIONAL INFORMATION
BH6	1	ELECTRICAL PANEL INFO SIGN	FRANKE	SEE SHEET T3.0 FOR ADDITIONAL INFORMATION
BH7	1	CREW ROOM SIGN	FRANKE	SEE SHEET T3.0 FOR ADDITIONAL INFORMATION
BH8	1	MANAGER OFFICE SIGN	FRANKE	SEE SHEET T3.0 FOR ADDITIONAL INFORMATION
D1		48" NEXT GEN DIRECTIONAL ENTER	EVERBRITE/PERSONA	SEE CIVIL PLANS
D2		48" NEXT GEN DIRECTIONAL EXIT	EVERBRITE/PERSONA	SEE CIVIL PLANS
D3		48" NEXT GEN DIRECTIONAL WELCOME	EVERBRITE/PERSONA	SEE CIVIL PLANS
D4		48" NEXT GEN DIRECTIONAL THANK YOU	EVERBRITE/PERSONA	SEE CIVIL PLANS
D5		48" NEXT GEN DIRECTIONAL DRIVE-THRU	EVERBRITE/PERSONA	SEE CIVIL PLANS
DT1		SINGLE ARM / DOUBLE ARM GATEWAY	EVERBRITE/PERSONA	SEE CIVIL PLANS
DT2		ANY LANE, ANY TIME SIGN	EVERBRITE/PERSONA	SEE CIVIL PLANS
DT3		PRE-BROWSE BOARD	EVERBRITE/PERSONA	SEE CIVIL PLANS
DT4		SPRINGBOARD CANOPY	EVERBRITE/PERSONA	SEE CIVIL PLANS
DT5		OUTDOOR DIGITAL MENU BOARD	EVERBRITE/PERSONA	SEE CIVIL PLANS
DT6		COMMUNICATION ASSIST. DECAL	FRANKE	SEE CIVIL PLANS
DT7	2	NO SOLICITING	FRANKE	
DT8	1	BRAILLE MENU DECAL	FRANKE	SEE SHEET T3.0 FOR ADDITIONAL INFORMATION
DT9	1	COMMUNICATION ASSIST. DECAL	FRANKE	SEE SHEET T3.0 FOR ADDITIONAL INFORMATION
DT10	1	COMMUNICATION ASSIST. DECAL: CREW SIDE	FRANKE	SEE SHEET T3.0 FOR ADDITIONAL INFORMATION
DT11	1	STORE HOUR DECAL	IMS	

TAG	QTY.	DESCRIPTION	PROVIDER	COMMENTS
E1	1	EXTERIOR DELIVERY BLADE SIGN	EVERBRITE/PERSONA	SEE SHEETS A2.0 & A2.1 FOR ADDITIONAL INFORMATION
E2	2	WELCOME DECAL	FRANKE	SEE SHEETS A2.0 & A2.1 FOR ADDITIONAL INFORMATION
E3	2	STORE HOUR DECAL	IMS	
E4	2	HANDICAP DECAL	FRANKE	SEE SHEET T3.0 FOR ADDITIONAL INFORMATION
E5	4	PULL SIGN	FRANKE	SEE SHEET T3.0 FOR ADDITIONAL INFORMATION
E6	2	DRIVE-THRU TRAFFIC DECAL	FRANKE	SEE SHEET T3.0 FOR ADDITIONAL INFORMATION
E7	7	EXIT SIGN	FRANKE	SEE SHEET T3.0 FOR ADDITIONAL INFORMATION
E8	2	BRAILLE MENU DECAL	FRANKE	SEE SHEET T3.0 FOR ADDITIONAL INFORMATION
E9	2	COMMUNICATION ASSIST. DECAL	FRANKE	SEE SHEET T3.0 FOR ADDITIONAL INFORMATION
E10	1	EMPLOYEE ONLY SIGN	FRANKE	SEE SHEET T3.0 FOR ADDITIONAL INFORMATION
E11	2	MCDELIVERY TRIANGULAR SIGN	EIS/JBI	SEE SHEET A4.2 FOR ADDITIONAL INFORMATION
E12	1	MCDELIVERY WALK UP WINDOW SIGN	FRANKE	SEE SHEETS T3.0 & A4.2 FOR ADDITIONAL INFORMATION
E13	1	RING BELL FOR ASSISTANCE SIGN	FRANKE	SEE SHEET A4.2 FOR ADDITIONAL INFORMATION
E14	1	MCDELIVERY WALK UP HOURS	FRANKE	SEE SHEET A4.2 FOR ADDITIONAL INFORMATION
E15	1	EXTERIOR MOBILE BLADE SIGN	EVERBRITE/PERSONA	SEE SHEETS A2.0 & A2.1 FOR ADDITIONAL INFORMATION
F1	2	BUILDING ARCHES	EVERBRITE/PERSONA	SEE SHEETS A2.0 & A2.1 FOR ADDITIONAL INFORMATION
F2	1	BUILDING WORDMARK	EVERBRITE/PERSONA	SEE SHEETS A2.0 & A2.1 FOR ADDITIONAL INFORMATION
F6	1	PAY HERE 1 DECAL	EVERBRITE/PERSONA	SEE SHEET A2.1 FOR ADDITIONAL INFORMATION
F7	1	PICK UP 2 DECAL	EVERBRITE/PERSONA	SEE SHEET A2.1 FOR ADDITIONAL INFORMATION
F8	1	PICK UP 3 DECAL	EVERBRITE/PERSONA	SEE SHEET A2.1 FOR ADDITIONAL INFORMATION

TAG	QTY.	DESCRIPTION	PROVIDER	COMMENTS
I1		MONUMENT SIGN	EVERBRITE/PERSONA	SEE CIVIL PLANS
I2		ROAD SIGN	EVERBRITE/PERSONA	SEE CIVIL PLANS
I3		HIGHWAY SIGN	EVERBRITE/PERSONA	SEE CIVIL PLANS
P1		ADA RESERVED PARKING	FRANKE	SEE CIVIL PLANS
P2		VAN ACCESSIBLE	FRANKE	SEE CIVIL PLANS
P3		DRIVE THRU RESERVED	EVERBRITE/PERSONA	SEE CIVIL PLANS
P4		MOBILE ORDER CURBSIDE PICK UP	EVERBRITE/PERSONA	SEE CIVIL PLANS
P5		MCDELIVERY COURIER RESERVED	EVERBRITE/PERSONA	SEE CIVIL PLANS
R1	2	RESTROOM GENDER SIGNS	FRANKE	SEE SHEETS T3.0 & A4.0 FOR ADDITIONAL INFORMATION
R2	1	JANITOR SIGN	FRANKE	SEE SHEET T3.0 FOR ADDITIONAL INFORMATION
R3	1	NOT AN EXIT	FRANKE	SEE SHEET T3.0 FOR ADDITIONAL INFORMATION
R4	2	EMPLOYEE WASH HANDS SIGN	FRANKE	
S2	2	FULFILLMENT ASSISTANCE SIGN	FRANKE	SEE SHEETS T3.0 & A4.2 FOR ADDITIONAL INFORMATION
S3	1	MOBILE PICK-UP TRIANGULAR SIGN	EIS/JBI	SEE SHEET A4.2 FOR ADDITIONAL INFORMATION
S4	2	KIOSK SIGN – CREDIT ONLY	FRANKE	
S5	2	KIOSK SIGN – CASH CREDIT	FRANKE	
S6	1	MAX OCCUPANCY SIGN	FRANKE	SEE GENERAL NOTE 7 SHEET A1.0

SIGNAGE NOTES

1. SIGNAGE D1-D5, I1-I3, DT1-DT5, & P1-P5 LOCATIONS DEPENDENT ON SITE LAYOUT. SEE LOCATIONS IN MCDONALD'S RESTAURANT SIGNAGE GUIDELINES. COORDINATE WITH MCDONALD'S ACM.
2. SEE MCDONALD'S RESTAURANT SIGNAGE GUIDELINES FOR VISUAL REFERENCE OF SIGNAGE HEIGHTS, LOCATIONS, AND PLACEMENT.
3. SEE MCDONALD'S RESTAURANT SIGNAGE GUIDELINES FOR OPTIONAL AND NON-STANDARD SIGNAGE AVAILABILITY.

FRANKE ORDERING DETIALS

NEW RESTAURANT SIGNAGE PACKAGE
PURCHASE NUMBER: K194150
PHONE: 1(800)423-5247
FAX: 1(877)538-6882
ONLINE: WWW.FRANKESUPPLY.COM
EMAIL: FS-FRANKESUPPLY.US@FRANKE.COM

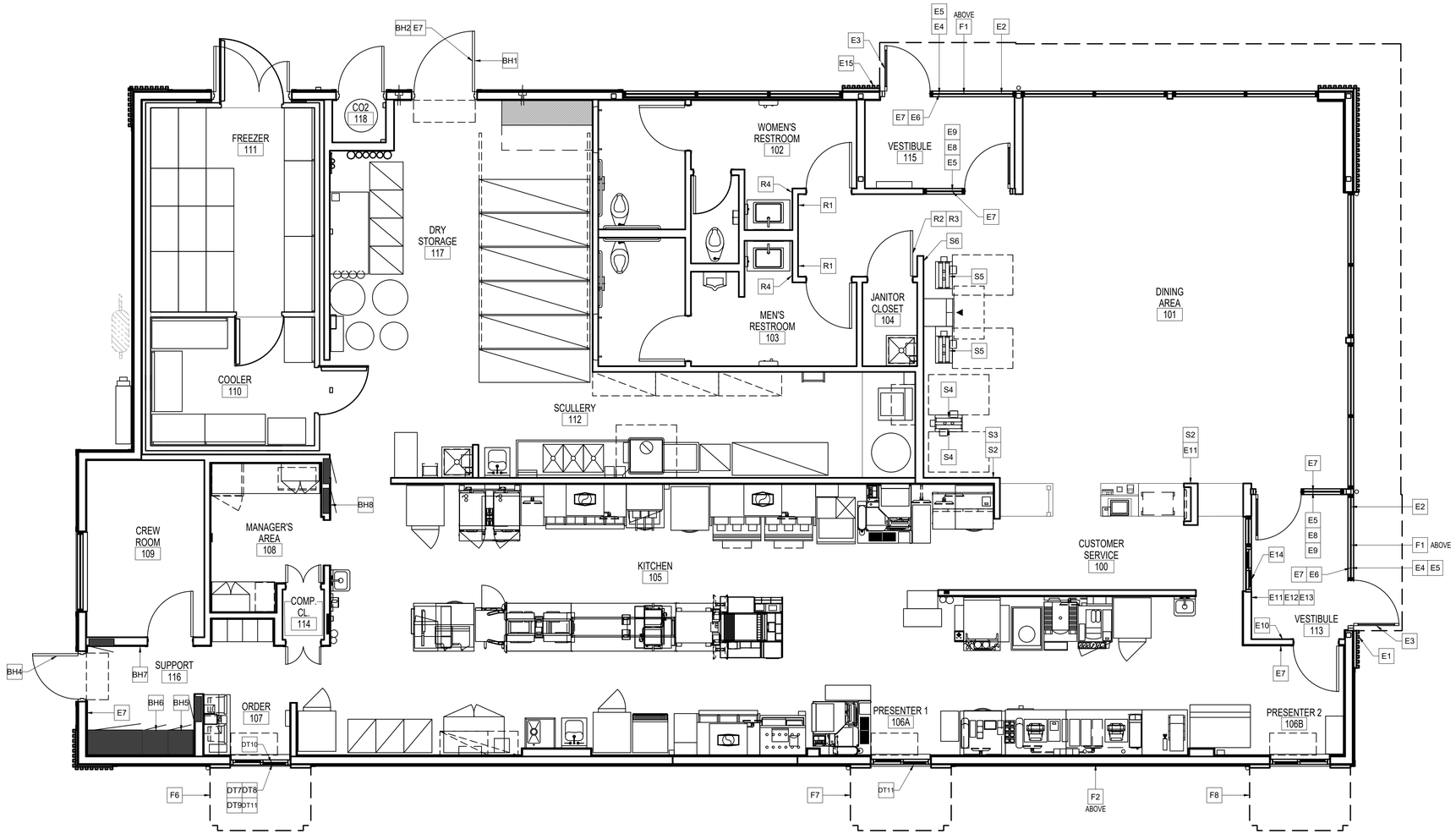

MCDONALD'S SIGNAGE PLAN

Scale:1/4" = 1'-0"

LINGLE DESIGN GROUP INC
158 WEST MAIN STREET
LENA, IL 61048
815.369.9155
1764 BLAKE ST
DENVER, CO 8020
303.974.5873
WWW.LINGLEDESIGN.COM

© ALL DRAWINGS AND WRITTEN MATERIAL CONTAINED HEREIN ARE THE PROPERTY OF THE LINGLE DESIGN GROUP, INC. THEY MAY NOT BE REVISED, COPIED, REUSED, OR DISCLOSED IN ANY MANNER WITHOUT WRITTEN AUTHORIZATION FROM THE ARCHITECT.

CARL LINGLE LICENSED 7997 KANSAS ARCHITECT

04-08-26

STATE ID: 150404
PROJECT #: 26-028
NATIONAL #: 44655
DRAWN BY: CR
CHECKED BY: JK

DATE:
04/08/26 - PERMIT / BID SET

REVISIONS
1 05/07/26 - QC COMMENTS/ADA UPDATE
2 06/22/26 - CITY COMMENTS / DECOR

CLIENT
McDonald's USA, LLC

PROTOTYPE
BB20 4584 WW-HB
ISSUE DATE 02/25

ADDRESS
707 1/2 METROPOLITAN AVE
LEAVENWORTH, KS 66048

SHEET TITLE
MCDONALD'S SIGNAGE PLAN

SHEET NUMBER:
T4.0

IP-CCTV SCHEDULE

CAMERA #	RESTAURANT AREA – CAMERA FOV	MODEL #
C01	OFFICE SAFE	QND-6011
C02	PRIMARY CUSTOMER ENTRANCE	QND-6011
C03	SECONDARY CUSTOMER ENTRANCE	QND-6011
C04	FRONT COUNTER / REGISTERS	QND-6011
C05	KIOSKS	QND-6011
C06	MAIN DINING / LOBBY	QND-6011
C07	MAIN DINING / LOBBY 2	QND-6011
C08	RESTROOM ENTRANCE / SIDE DINING	QND-6011
C09	PLACEPLACE INTERIOR / EXTERIOR (IF APPLICABLE)	QND-6011/ QNV-6012R1
C10	CASH BOOTH ID	QND-6011
C11	SIDE DELIVERY DOOR	QND-6011
C12	DELIVERY BACK DOOR	QND-6011
C13	DT LICENSE PLATE	QNV-6012R1
C14	TRASH CORRAL	QNV-6012R1
C15	FRONT PARKING LOT VIEW / CURBSIDE	QNV-6012R1
C16	GENERAL PARKING LOT / DRIVE THRU ENTRANCE	QNV-6012R1
C17	GENERAL PARKING LOT / DRIVE THRU EXIT / PULL FORWARD	QNV-6012R1
C18	NETWORK CLOSET	QND-6011
C19	FREEZER	QNV-6012R1
C20	DANGER ZONE	QNV-6012R1
C21	MERGE POINT	QNV-6012R1

IP-CCTV NOTES

C1. GC TO CONSULT OWNER OPERATOR (O/O) FOR PREFERRED SECURITY LEVEL. REFER TO THE U.S. IP-CCTV MINIMUM REQUIREMENT FIELD OF VIEW (FOV) GUIDE. REFER TO PLUS UP GUIDE FOR OTHER OPTIONAL SECURITY FEATURES. MCDONALD'S US SECURITY REFERENCE GUIDE AVAILABLE ON @MCD US SECURITY WEBSITE.

C2. GC TO COORDINATE INSTALLATION WITH SECURITY INSTALLER.

C3. FOR IP-CCTV SPECIFICATIONS REFER TO THE U.S. IP-CCTV MINIMUM REQUIREMENT FIELD OF VIEW (FOV). MCDONALD'S US SECURITY REFERENCE GUIDE AVAILABLE ON @MCD US SECURITY WEBSITE.

C4. ROUTE DATA CABLE IN ACCORDANCE TO THE LOW VOLTAGE CABLE MANAGEMENT SPECIFICATION ON E1.0.

C5. PARKING LOT IP-CCTV PLACEMENT WILL VARY BASED ON SITE LAYOUT. VERIFY IN FIELD.

C6. ADJUST INTERIOR IP-CCTV LOCATIONS BASED ON CEILING ELEMENTS AND DECOR PACKAGE SELECTED TO MAINTAIN FOV IN REFERENCE GUIDE.

RECOMMENDED IP-CCTV VENDORS

UAS
PHONE: 800-421-6661
EMAIL: CHRIS.MCGURK@UAS.COM

WACHTER
PHONE: 800-462-9638
EMAIL: MCDINSIDESALES@WACHTER.COM

CAMERA SPECIFICATIONS

LISTED BELOW ARE MCDONALD'S APPROVED IP-CCTV CAMERAS. THE BELOW SPECIFICATIONS MUST BE MET OR EXCEEDED BY ANY NEW CAMERAS.

HANWHA QND-6011

BEST FOR INTERIOR RESTAURANT USE SUCH AS DINING, KITCHEN, AND CREW AREAS

1. 2 MEGAPIXEL RESOLUTION
2. BUILT-IN 2.8MM FIXED LENS
3. ULTRA-COMPACT DESIGN
4. 30FPS@ALL RESOLUTIONS (H.265/H.264)
5. H.265, H.264, MJPEG CODEC SUPPORTED
6. ONVIF PROFILE S, ONVIF PROFILE G, AND ONVIF PROFILE T
7. MULTIPLE, INDIVIDUALLY CONFIGURABLE VIDEO STREAMS
8. FULL NDAA COMPLIANCE
9. DAY & NIGHT (ICR), WDR (120DB)
10. DEFOCUS DETECTION, MOTION DETECTION, TAMPERING DETECTION
11. PEOPLE COUNTING FOR RETAIL BUSINESS INTELLIGENCE
12. MICRO SD (128GB) MEMORY SLOT, POE / 12V DC
13. HALLWAY VIEW SUPPORT
14. IP42, IK08 RATED
15. LDC SUPPORT (LENS DISTORTION CORRECTION)
16. GENETEC STRATOCAST COMPATIBLE

HANWHA QNV-6012R1

BEST FOR ENVIRONMENTAL AREAS SUCH AS DRIVE-THRU, PARKING LOT, AND FREEZER/WALK-IN COOLER AREAS

1. MAXIMUM 2MEGAPIXEL (1920 X 1080) RESOLUTION
2. 0.03LUX (COLOR), 0LUX (B/W, IR LED ON)
3. 2.8MM FIXED LENS
4. MAXIMUM 30FPS@2MP ALL RESOLUTIONS (H.265/H.264)
5. H.265, H.264, MJPEG CODEC SUPPORTED
6. ONVIF PROFILE S, ONVIF PROFILE G, AND ONVIF PROFILE T
7. MULTIPLE, INDIVIDUALLY CONFIGURABLE VIDEO STREAMS
8. FULL NDAA COMPLIANCE
9. MOTION DETECTION, TAMPERING, DEFOCUS DETECTION
10. HALLWAY VIEW (90/270), LDC SUPPORT
11. MICRO SD/SDHC/SDXC MEMORY SLOT (MAX. 128GB)
12. IR VIEWABLE LENGTH 20M
13. IP66, IK10, POE, 12VDC

RECORDING APPLIANCE/SERVER AND VIDEO MANAGEMENT SOFTWARE SPECIFICATIONS

THE MINIMUM TECHNICAL SPECIFICATIONS THAT ANY NEW VMS SYSTEM MUST MEET ARE LISTED BELOW.

1. VIDEO RETENTION: AT LEAST 30 DAYS OF STORAGE*
2. CROSS-PLATFORM: LINUX (UBUNTU, CENTOS, REDHAT) OR WINDOWS (CLIENT, SERVER)
3. WEB BROWSER BASED: NO CLIENT SOFTWARE NEEDED – ACCESS ANYWHERE FROM ANYWHERE (PC, MAC, OR MOBILE)
4. QUICK SOFTWARE INSTALLATION: 5 MINUTES OR LESS (NO WINDOWS DEPENDENCIES)
5. SECURE: SRTP ENCRYPTED VIDEO TRANSMISSION, HTTPS SECURE USER INTERFACE
6. NETWORK OPTIMIZED: PEER-TO-PEER VIDEO TRANSMISSION ACROSS SUBNETS W/ WEBRTC
7. SCALABILITY: FEDERATE TO EITHER THE ENTERPRISE OR CLOUD
8. HARDWARE INDEPENDENT: X86_64, ARM, MIPS (APPLIANCES, SERVERS, IOT DEVICES)
9. APPLICATION PARTNER PLATFORM: THIRD-PARTY API BASED INTEGRATION PLATFORM

*DATA AND IMAGE RETENTION SHOULD FOLLOW LOCAL OR COUNTRY DATA PROTECTION STANDARDS AND REGULATIONS. IT IS RECOMMENDED THAT ORGANIZATIONS HAVE A RETENTION POLICY. THEY SHOULD ONLY KEEP THE IMAGES FOR AS LONG AS NECESSARY TO MEET THE PURPOSE OF RECORDING THEM. IN THE ABSENCE OF STANDARDS AND REGULATIONS, BEST PRACTICES SUGGEST RETAINING IMAGES FOR A MINIMUM OF 30 DAYS IN A SECURE FORMAT BEFORE THEY ARE DELETED OR OVERWRITTEN.

SYSTEM NOTES

TAG	DESCRIPTION
S1	IP-CCTV CAMERA SYSTEM SHALL BE SERVER BASED AND HOUSED IN THE O/O EQUIPMENT RACK (221.09) SEPARATE FROM THE POS RACK. EQUIPMENT TO BE POWERED FROM O/O EQUIPMENT RACK PDU (900W).
S2	O/O EQUIPMENT WILL HAVE ITS OWN PATCH PANELS AND SWITCHES. DO NOT CONNECT TO THE POS SWITCHES.
S3	CAMERAS ARE POWERED OVER ETHERNET (POE) AND ARE POWERED FROM A POE SWITCH.
S4	CAMERA PLACEMENTS AND VIEWS SHALL ADHERE TO THE MCD US IP-CCTV MINIMUM STANDARD DOCUMENT.
S5	ALERT CAPABILITY TO BE PROVIDED FOR BACK DOOR EVENTS.
S6	32 IN. MONITOR TO BE INSTALLED AT MANAGERS DESK. MONITOR TO BE CONFIGURED TO DISPLAY NINE VIEWS DETERMINED BY THE O/O WITH THE ABILITY TO DISPLAY ALL CAMERA VIEWS.
S7	24 IN. MONITOR TO BE INSTALLED TO DISPLAY. MERGE POINT, DANGER ZONE, AND CURBSIDE CAMERAS. SEE 217.13 ON ELECTRICAL SHEETS.
S8	24 IN. MONITOR TO DISPLAY PULL FORWARD CAMERA. SEE 217.13 ON ELECTRICAL SHEETS.

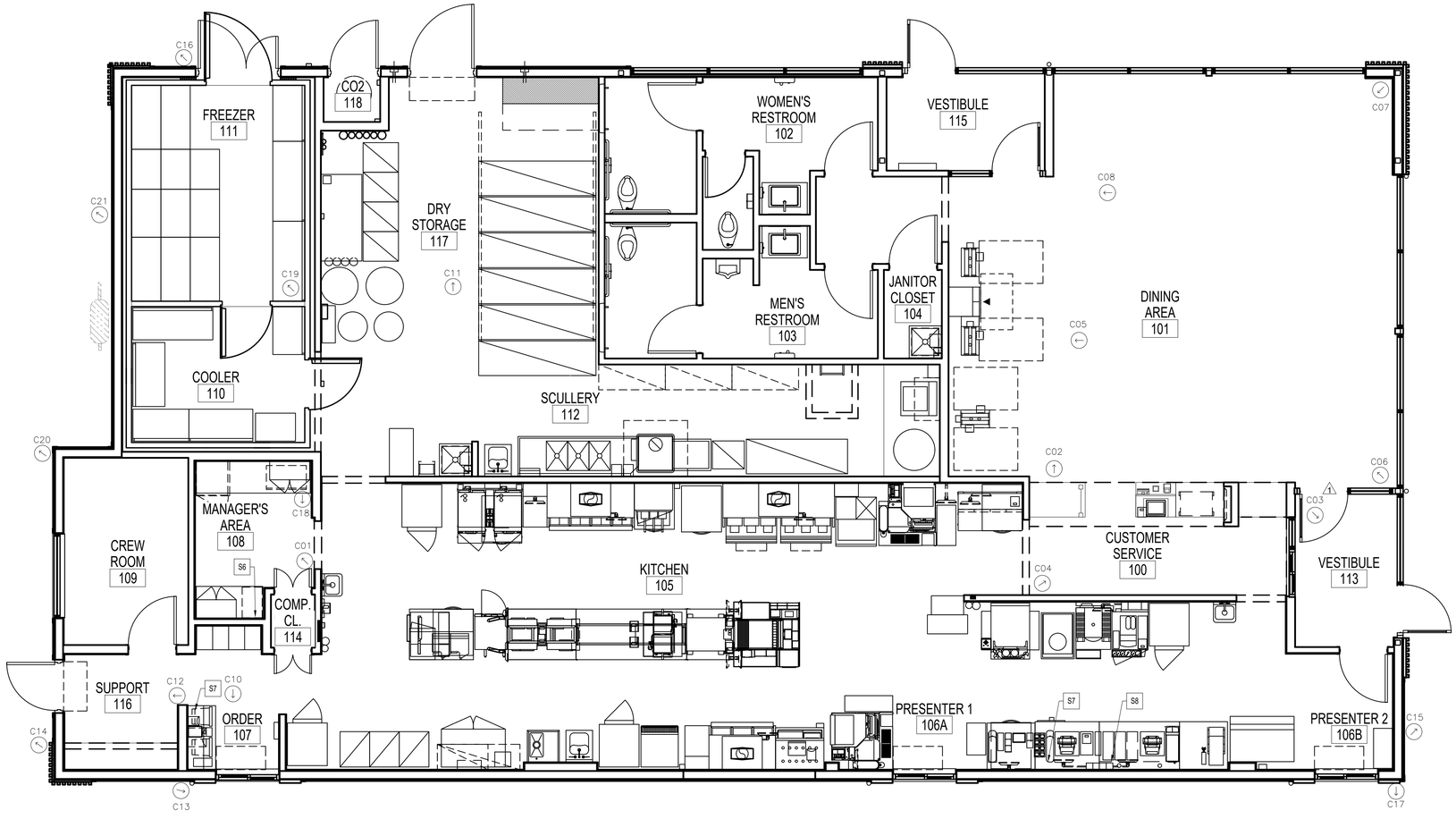

IP-CCTV PLAN

Scale: 1/4" = 1'-0"

LINGLE DESIGN GROUP INC
158 WEST MAIN STREET
LENA, IL 61048
815.369.9155
1764 BLAKE ST
DENVER, CO 8020
303.974.5873
WWW.LINGLEDESIGN.COM

© ALL DRAWINGS AND WRITTEN MATERIAL CONTAINED HEREIN ARE THE PROPERTY OF THE LINGLE DESIGN GROUP, INC. THEY MAY NOT BE REVISED, COPIED, REUSED, OR DISCLOSED IN ANY MANNER WITHOUT WRITTEN AUTHORIZATION FROM THE ARCHITECT.

CARL LINGLE LICENSED 7997 KANSAS ARCHITECT

04-08-26

STATE ID: 150404
PROJECT #: 26-028
NATIONAL #: 44655
DRAWN BY: CR
CHECKED BY: JK

DATE:
04/08/26 - PERMIT / BID SET

REVISIONS
1. 05/07/26 - QC COMMENTS/ADA UPDATE
2. 06/22/26 - CITY COMMENTS / DECOR

CLIENT
McDonald's USA, LLC

PROTOTYPE
BB20 4584 WW-HB
ISSUE DATE 02/25

ADDRESS
707 1/2 METROPOLITAN AVE
LEAVENWORTH, KS 66048

SHEET TITLE
IP-CCTV PLAN

SHEET NUMBER:
T5.0

DIVISION 1 - GENERAL NOTES

A) CONSTRUCTION OBSERVATION SERVICES

1. DIRECT CONSTRUCTION OBSERVATIONS AND REVIEW OF THE CONTRACTOR'S PERFORMANCE IS NOT INCLUDED AS PART OF THE ARCHITECT'S BASIC SERVICES. IT IS UNDERSTOOD THAT SUCH RESPONSIBILITIES WILL BE ASSUMED BY OTHERS. LINGLE DESIGN GROUP, INC. AVAILS ITSELF TO THE CLIENT, CONTRACTOR AND OTHER PARTIES AS NECESSARY (VIA TELEPHONE, FAX AND E-MAIL) IN ORDER TO ASSIST IN PROVIDING CLARIFICATIONS OR RESOLVING ISSUES AND PROBLEMS

B) EXAMINATION

1. THE CONTRACTOR IS HEREBY SPECIFICALLY DIRECTED, AS A CONDITION OF THE CONTRACT, TO ACQUAINT HIMSELF WITH THE ARTICLES CONTAINED IN THE GENERAL NOTES, AND TO NOTIFY AND APPRISE ALL SUBCONTRACTORS AND ALL OTHER PARTIES OF THE CONTRACT OF, AND BIND THEM TO ITS CONDITIONS.

2. DO NOT SCALE DRAWINGS. WRITTEN DIMENSIONS GOVERN PARTITION LOCATIONS, DIMENSIONS AND TYPES. DOOR AND WINDOW LOCATIONS SHALL BE AS SHOWN ON CONSTRUCTION PLAN. IN CASE OF CONFLICT, NOTIFY DESIGNER/ARCHITECT FOR WRITTEN CLARIFICATION PRIOR TO PROCEEDING WITH CONSTRUCTION.

3. THE DESIGNER/ARCHITECT SHALL BE IMMEDIATELY NOTIFIED OF ANY APPARENT CONFLICTS, ERRORS, OR OMISSIONS IN THE CONSTRUCTION DRAWINGS OR ANY APPARENT MISAPPLICATION OF ANY PRODUCT, SYSTEM OR ASSEMBLY FOR THE INTENDED USE, OR ANY DISCOVERED EXISTING CONDITIONS THAT ARE CONTRARY TO THE CONDITIONS INDICATED IN THE CONSTRUCTION DRAWINGS. THE DESIGNER/ARCHITECT SHALL PROVIDE INTERPRETATION AND CLARIFICATION AND, IF REQUIRED, MAKE APPROPRIATE REVISIONS TO THE CONSTRUCTION DRAWINGS. FAILURE TO NOTIFY THE DESIGNER/ARCHITECT PRIOR TO PROCEEDING WITH RELATED WORK WILL RESULT IN THE CONTRACTOR CORRECTING SUCH ITEMS AT THE CONTRACTOR'S EXPENSE.

4. THE CONSTRUCTION DRAWINGS ARE GENERAL DIAGRAMMATIC REPRESENTATIONS OF THE WORK, AND DO NOT INDICATE OR SPECIFY IN DETAIL, EVERY CONDITION AND COMPONENT OF CONSTRUCTION. THE CONTRACTOR SHALL PROVIDE ALL LABOR, MATERIALS AND EQUIPMENT, FABRICATE ALL ASSEMBLIES AND INSTALL ALL EQUIPMENT AND SYSTEMS TO PRODUCE A COMPLETE, INTEGRATED AND FULLY FUNCTIONAL WORK PRODUCT IN ACCORDANCE WITH ALL MATERIAL AND EQUIPMENT MANUFACTURER'S REQUIREMENTS, INDUSTRY STANDARDS AND FEDERAL, STATE AND LOCAL LAWS, CODES AND REGULATIONS.

5. PRIOR TO ACCEPTANCE OF SUB-CONTRACTOR BIDS AND COMMENCEMENT OF CONSTRUCTION, GENERAL CONTRACTOR TO PROVIDE ALL SUB-CONTRACTORS ACCESS TO A FULL SET OF CONSTRUCTION DOCUMENTS.

6. THE CONTRACTOR SHALL VERIFY THAT DRAWINGS ARE THE LATEST ISSUE PRIOR TO COMMENCING CONSTRUCTION.

7. GENERAL CONTRACTOR SHALL VISIT PROPOSED JOB SITE AND FAMILIARIZE HIMSELF WITH THE EXISTING CONDITIONS & LOCATIONS OF UTILITIES. FAILURE OF GENERAL CONTRACTOR TO VISIT JOB SITE PRIOR TO BIDDING WILL RESULT IN FORFEITURE OF EXTRA COMPENSATION FOR TIME AND MONEY.

8. THE GENERAL CONTRACTOR SHALL CONTACT LOCAL UTILITY COMPANIES TO VERIFY ALL ELEVATIONS, SIZES, LOCATIONS AND CONNECTION POINTS FOR ALL UTILITIES AFFECTED BY THIS PROJECT. THE GENERAL CONTRACTOR SHALL COORDINATE AND OBTAIN ALL PERMITS FOR, AND ENSURE ALL UTILITIES ARE TURNED ON PRIOR TO COMPLETION OF WORK.

C) CONTRACTS

1. REFER TO GENERAL CONTRACTOR'S EXECUTED CONTRACT FOR DETAILS.

D) INSURANCE

1. REFER TO GENERAL CONTRACTOR'S EXECUTED CONTRACT FOR DETAILS.

E) STANDARDS AND CODES

1. GIVE ALL NOTICES AND COMPLY WITH ALL NATIONAL, STATE AND LOCAL LAWS, ORDINANCES, CODES, RULES AND REGULATIONS BEARING ON THE CONDUCT OF THE WORK. IF THE CONTRACTOR OBSERVES THAT THE DRAWINGS AND SPECIFICATIONS ARE AT VARIANCE THEREWITH, PROMPTLY NOTIFY THE DESIGNER/ARCHITECT.

2. THE CONTRACTOR SHALL FILE, OBTAIN AND PAY FEES FOR BUILDING DEPARTMENT AND ALL OTHER AGENCY APPROVALS AND PERMITS, CONTROLLED INSPECTIONS, AND FINAL WRITE-OFFS FOR PROJECT COMPLETION.

3. IF THE CONTRACTOR KNOWINGLY PERFORMS ANY WORK WHICH IS CONTRARY TO SUCH LAWS, ORDINANCES, CODES, RULES AND REGULATIONS, HE SHALL PROMPTLY MAKE CHANGES AS REQUIRED TO COMPLY THEREWITH AND BEAR ALL COSTS ARISING THEREFROM.

4. CONFLICTS: IN CASE OF CONFLICTS IN THE REQUIREMENTS OF AUTHORITIES HAVING JURISDICTION, THE MOST RESTRICTIVE REQUIREMENTS SHALL GOVERN.

5. WHERE CODES OR REGULATIONS, OTHER THAN THOSE LISTED IN THIS SECTION, ARE REFERRED TO IN VARIOUS SECTIONS OF THE DOCUMENTS. IT SHALL BE UNDERSTOOD THAT THEY APPLY TO THIS WORK AS FULLY AS IF CITED HEREIN.

6. CODE RESTRICTIONS FOR ALL DESIGN CONSIDERATIONS SHALL CONFORM TO LOCAL, STATE AND ALL GOVERNING CODES.

7. THE CONTRACTOR SHALL ARRANGE FOR ALL INSPECTIONS NECESSARY TO OBTAIN CERTIFICATE OF OCCUPANCY AND FINAL COMPLETION.

8. THE CONTRACTOR SHALL MAINTAIN FOR THE ENTIRE LENGTH OF HIS CONTRACT, EXITS, EXIT LIGHTING, FIRE PROTECTIVE DEVICES, AND ALARMS TO CONFORM TO LOCAL BUILDING CODE REQUIREMENTS.

9. THE CONTRACTOR SHALL BE RESPONSIBLE FOR ADEQUATELY BRACING AND PROTECTING WORK DURING CONSTRUCTION AGAINST DAMAGE, BREAKAGE, COLLAPSE, DISTORTION AND/OR MISALIGNMENT IN ACCORDANCE WITH APPLICABLE CODES, STANDARDS AND GOOD PRACTICE.

10. WORK AND/OR CONSTRUCTION OPERATIONS SHALL NOT UNDERMINE THE STRUCTURAL INTEGRITY OF THE BUILDING.

11. ALL COMBUSTIBLE MATERIALS SHALL MEET APPLICABLE CODES. WOOD SHALL BE FIRE RETARDANT TREATED WHERE REQUIRED BY LOCAL BUILDING CODES.

12. THE CONTRACTOR SHALL PROVDE BACK FLOW DEVICES AS REQUIRED BY LOCAL, STATE AND FEDERAL CODES.

F) LAYOUT OF WORK

1. EXERCISE PROPER PRECAUTIONS TO VERIFY ALL EXISTING CONDITIONS AND LAYOUT OF WORK.

2. CONTRACTOR IS RESPONSIBLE FOR ANY ERROR RESULTING FROM FAILURE TO EXERCISE SUCH PRECAUTIONS. ANY SUCH ERROR WILL NOT BE CONSIDERED AS A BASIS FOR EXTRA COMPENSATION.

3. GENERAL CONTRACTOR IS RESPONSIBLE FOR LAY OUT OF ALL WORK AND IS RESPONSIBLE FOR ALL LINES AND MEASUREMENTS OF THE BUILDING, UTILITIES, AND OTHER WORK EXECUTED UNDER THE CONTRACT.

4. DIMENSIONS ARE FROM FINISH FACE TO FINISH FACE, UNLESS OTHERWISE NOTED. DIMENSIONS MARKED "CLEAR" SHALL BE MAINTAINED AND SHALL ALLOW FOR THICKNESS OF FINISHES.

5. DIMENSIONS MARKED "CLEAR" ARE TO BE WITHIN 1/8" ALONG FULL HEIGHT AND FULL WIDTH OF WALLS.

6. DIMENSIONS KNOWN AS V.I.F. SHALL BE VERIFIED BY THE CONTRACTOR IN THE FIELD BY LAYING OUT THE PARTITIONS. CONTRACTOR SHALL NOTIFY CONSTRUCTION MANAGER AND ARCHITECT OF ANY DISCREPANCY IN DIMENSIONS PRIOR TO PROCEEDING WITH THE WORK IN THAT AREA.

7. THE ARCHITECT AND HIS CONSULTANTS WILL NOT HAVE CONTROL OVER OR CHARGE OF, NOR BE RESPONSIBLE FOR, THE CONSTRUCTION MEANS, METHODS, TECHNIQUES, SEQUENCES OR PROCEDURES, THE WORK, THE CONTRACTOR'S FAILURE TO PERFORM THE WORK IN ACCORDANCE WITH THE REQUIREMENTS OF THE CONSTRUCTION DRAWINGS OR CONTRACT, OR THE ACTS OR OMISSIONS OF THE CONTRACTOR, SUBCONTRACTORS, OR THEIR AGENTS OR EMPLOYEES OR ANY OTHER PERSONS OR ENTITIES PERFORMING PORTIONS OF THE WORK. ACTS OR OMISSIONS OF THE CONTRACTOR, SUBCONTRACTORS, OR THEIR AGENTS OR EMPLOYEES OR ANY OTHER PERSONS OR ENTITIES PERFORMING PORTIONS OF THE WORK.

8. WORK NOT PARTICULARLY DETAILED, NOTED OR SPECIFIED, SHALL BE THE SAME AS SIMILAR PARTS THAT ARE DETAILED, NOTED OR SPECIFIED.

9. IN THE EVENT OF INCONSISTENCIES AMONG THE CONTRACT DOCUMENTS, THE DESIGNER/ARCHITECT SHALL INTERPRET THEM WHEN ASKED TO DO SO BY THE OWNER OR CONTRACTOR. THE DESIGNER/ARCHITECT SHALL NOT BE RESPONSIBLE FOR THE RESULTS OF SUCH INTERPRETATIONS MADE BY OTHERS.

10. THE GENERAL CHARACTER OF DETAIL WORK IS SHOWN ON THE CONTRACT DOCUMENTS. SUBSEQUENT CLARIFICATIONS MAY BE MADE BY ADDITIONAL LAYOUTS OR LARGE SCALE OR FULL SIZE DETAILS.

11. DRAWINGS AND DIAGRAMS FOR MECHANICAL AND ELECTRICAL WORK SHALL BE CONSIDERED AS DIAGRAMMATIC ONLY, NOT TO BE USED FOR ANY STRUCTURAL GUIDANCE OR PHYSICAL LAYOUT. IN CASE OF CONFLICT, UNLESS OTHERWISE NOTED, THE ARCHITECTURAL DRAWINGS SHOWING LOCATIONS FOR MECHANICAL AND ELECTRICAL ITEMS AND ACCESSORIES SHALL TAKE PRECEDENCE.

12. UNLESS OTHERWISE NOTED, IT IS THE INTENTION OF THE DRAWINGS AND SPECIFICATIONS FOR ALL WORK, EQUIPMENT, CASEWORK, MECHANICAL, ELECTRICAL AND SIMILAR DEVICES OF WHATEVER NATURE, BE COMPLETELY INSTALLED, HOOKED-UP, MADE OPERATIONAL AND FUNCTIONAL FOR THE PURPOSE INTENDED, AND THAT ALL COSTS FOR THIS BE INCLUDED IN THE CONTRACTOR'S PROPOSAL.

13. THE CONTRACTOR SHALL, IN ACCORDANCE WITH THE CONSTRUCTION DOCUMENTS, APPLY, INSTALL, CONNECT, ERECT, CLEAN AND/OR CONDITION MANUFACTURED ARTICLES, MATERIALS AND/OR EQUIPMENT PER MANUFACTURER'S INSTRUCTIONS. IN CASE OF CONFLICT BETWEEN MANUFACTURER'S INSTRUCTIONS AND THE CONTRACT DOCUMENTS, THE CONTRACTOR SHALL NOTIFY THE PROJECT MANAGER AND THE ARCHITECT BEFORE PROCEEDING.

G) ALTERATIONS

1. ARRANGE WITH OWNER/OPERATOR A CONVENIENT TIME TO PERFORM ALL WORK AND INSTALL TEMPORARY PROTECTED MEANS OF EGRESS FROM REQUIRED EXITS, INCLUDING TEMPORARY LIGHTING AND SAFETY DEVICES IN ACCORDANCE WITH GOVERNING STATE AND LOCAL CODE AND BUILDING MANAGEMENT REQUIREMENTS.

2. THE CONTRACTOR SHALL REMOVE, REPAIR, RESTORE AND REPLACE ANY WORK NECESSARY OR INDICATED ON THE DRAWINGS. CUT ALL NECESSARY OPENINGS AND REPAIR AFTER CUTTING WHERE NECESSARY. ALL PROTRUSIONS, MARKS, CRACKS, OR OTHER EVIDENCE OF A DEFICIENT OR DAMAGED CONDITION SHALL BE ELIMINATED UNLESS SPECIFICALLY NOTED OTHERWISE. ANY ITEMS WHICH ARE SPLIT, CRACKED, CHIPPED, SPALLED, BROKEN, MISSING, OUT OF ALIGNMENT OR ADJUSTMENT, MECHANICALLY OR STRUCTURALLY UNSAFE OR UNSOUND, BENT, TORN, OR OTHERWISE DEFICIENT OR DAMAGED IN ANY MANNER SHALL BE REMOVED, REPLACED, RESTORED OR SATISFACTORILY REPAIRED AS DIRECTED BY THE OWNER'S REPRESENTATIVE.

H) HAZARDOUS MATERIALS

1. ASBESTOS AND HAZARDOUS WASTE EXCLUSION: THE ARCHITECT HEREBY STATES, AND THE OWNER ACKNOWLEDGES, THAT THE ARCHITECT HAS NO PROFESSIONAL LIABILITY OR OTHER INSURANCE (AND IS UNABLE TO REASONABLY OBTAIN SUCH INSURANCE) FOR CLAIMS ARISING OUT OF THE PERFORMANCE OF OR THE FAILURE TO PERFORM PROFESSIONAL SERVICES, INCLUDING BUT NOT LIMITED TO, THE PREPARATION OF REPORTS, DESIGNS, DRAWINGS, AND SPECIFICATIONS, AND RELATED TO THE INVESTIGATION DETECTION OF HAZARDOUS MATERIALS ON THE SITE.

I) CONTRACTOR USE OF PREMISES

1. CONSTRUCTION OPERATIONS: LIMITED TO AREAS NOTED ON DRAWINGS.

2. TIME RESTRICTIONS FOR PERFORMING WORK: VERIFY WITH CONSTRUCTION MANAGER & LOCAL CODES.

3. UTILITY OUTAGES AND SHUTDOWN SHALL BE COORDINATED WITH THE LANDLORD/OWNER.

4. AT ALL TIMES CONDUCT OPERATIONS TO INSURE THE LEAST INCONVENIENCE TO THE GENERAL PUBLIC. COMPLY WITH APPLICABLE CODES AND ORDINANCES FOR SAFETY.

5. ASSUME FULL RESPONSIBILITY FOR THE PROTECTION AND SAFEKEEPING OF PRODUCTS STORED ON THE SITE UNDER THIS CONTRACT.

6. PERFORM DEMOLITION WORK AND SUCH SPRINKLER WORK, CONCRETE SAW CUTTING, PAINTING AND SIMILAR WORK CAUSING EXCESSIVE NOISE, DUST OR ODORS DISTURBING BUILDING OCCUPANTS, OR ANY WORK DISRUPTING TENANTS OR PUBLIC TRAFFIC WITHIN THE BUILDING, AFTER HOURS OR AT TIMES AND IN SUCH A MANNER AS OTHERWISE APPROVED BY OWNER/OPERATOR/CONST. MGR.

7. COORDINATE USE OF PREMISES FOR WORK WITH THE LANDLORD/OWNER.

8. LIMIT USE OF SITE FOR WORK AND STORAGE TO AREAS DESIGNATED UNLESS SPECIFIC ADDITIONAL AREAS ARE ALLOWED IN WRITING BY THE OWNER/OPERATOR/CONST. MGR.

J) FINISH NOTES

1. ENSURE THAT SURFACE TO RECEIVE FINISHES ARE CLEAN, TRUE AND FREE OF IRREGULARITIES. DO NOT PROCEED WITH WORK UNTIL UNSATISFACTORY CONDITIONS HAVE BEEN CORRECTED. COMMENCEMENT OF WORK SHALL INDICATE INSTALLER'S ACCEPTANCE OF SUBSTRATE.

2. REPAIR AND PREPARE EXISTING SURFACES SCHEDULED TO REMAIN AS NECESSARY FOR APPLICATION OF NEW FINISHES.

3. ALL CODE-REQUIRED LABELS SUCH AS "UL", FACTORY MUTUAL OR ANY EQUIPMENT IDENTIFICATION, PERFORMANCE RATING, NAME OR NOMENCLATURE PLATES SHALL REMAIN READABLE AND NOT PAINTED.

4. THE CONTRACTOR SHALL PATCH SURFACES TO MATCH ADJACENT IN A MANNER SUITABLE TO RECEIVE FINISHES.

5. COORDINATE WITH OWNER'S DESIGNATED REPRESENTATIVE FOR DELIVERY AND PLACEMENT OF ALL FURNITURE & WALL-HUNG EQUIPMENT.

K) GENERAL CLEANING

1. THE GENERAL CONTRACTOR IS RESPONSIBLE FOR ALL TRASH REMOVAL, INCLUDING TRASH MADE BY ALL OTHER TRADES, AND SHALL KEEP THE SPACE CLEAN AND CLEAR OF REFUSE AT ALL TIMES.

L) PUNCH LIST / CLOSE-OUT

1. UPON NOTIFICATION, THE OWNER'S REPRESENTATIVE SHALL PREPARE A PUNCH LIST OF THE PROJECT AND THE GENERAL CONTRACTOR SHALL MAKE GOOD ALL PUNCH LIST ITEMS TO THE SATISFACTION OF THE OWNER'S REPRESENTATIVE PRIOR TO FINAL PAYMENT.

M) RECORD DRAWINGS / WARRANTIES

1. THE CONTRACTOR SHALL LEAVE A COPY OF REDLINED AS-BUILT DRAWINGS AT THE STORE NOTING ALL REVISIONS OF WORK UPON COMPLETION OF CONSTRUCTION. DRAWINGS SHALL BE PLACED IN A 36" LONG 4" PVC WITH A CAP. PVC PIPE SHALL BE ATTACHED TO WALL AT LOCATION AS SPECIFIED BY THE PROJECT MANAGER.

2. UPON COMPLETION OF THE WORK AND BEFORE FINAL PAYMENT IS MADE, THE CONTRACTOR SHALL SECURE AND DELIVER TO THE OWNER ALL GUARANTEES AND/OR WARRANTIES ON ALL EQUIPMENT SUPPLIED AND/OR INSTALLED BY THE CONTRACTOR AND HIS SUB-CONTRACTORS, AND ALL OPERATIONS / MAINTENANCE MANUALS. (SEE BUY-OUT PACKAGE FOR MORE DETAILS)

N) GUARANTEE

1. THE GENERAL CONTRACTOR SHALL GUARANTEE THE WORK FOR ONE (1) YEAR AFTER SUBSTANTIAL COMPLETION OF ALL WORK.

GENERAL NOTES

1. ALL WORK SHALL BE IN COMPLIANCE WITH APPLICABLE FEDERAL, STATE AND LOCAL BUILDING CODES, REGULATIONS, ORDINANCES AND STANDARDS INCLUDING ADA AND OR OTHER HANDICAP ACCESSIBILITY CODES.
2. GENERAL CONTRACTOR IS RESPONSIBLE FOR COORDINATING WITH THE OWNER'S VENDORS REGARDING SCHEDULING ON SITE DURING CONSTRUCTION AND SEQUENCING OF THE WORK.
3. THE CONSTRUCTION NOTES AND DRAWINGS ARE SUPPLIED TO ILLUSTRATE THE DESIGN INTENT AND GENERAL TYPE OF CONSTRUCTION DESIRED AND ARE INTENDED TO IMPLY THE FINEST QUALITY OF CONSTRUCTION, MATERIAL AND WORKMANSHIP THROUGHOUT.
4. THE DRAWINGS ARE NOT TO BE SCALED. FOR INFORMATION CONCERNING EXISTING CONDITIONS, ETC., VERIFICATION MUST BE DONE IN THE FIELD. LARGE SCALE DRAWINGS HAVE PRECEDENCE OVER SMALL SCALE DRAWINGS
5. PRIOR TO COMMENCEMENT OF ANY CONSTRUCTION, CONTRACTOR SHALL VERIFY EXISTENCE AND LOCATION OF ALL EXISTING ABOVE AND BELOW GRADE, UTILITIES, INCLUDING SANITARY SEWER, STORM SEWER, WATER, GAS, ELECTRICAL, TELEPHONE, ETC. ANY DISCREPANCIES IN UTILITY LOCATIONS SHALL BE BROUGHT TO THE IMMEDIATE ATTENTION OF THE ARCHITECT.
6. GENERAL CONTRACTOR SHALL BE RESPONSIBLE FOR VERIFICATION OF ALL BUILDING DIMENSIONS PRIOR TO BEGINNING CONSTRUCTION AND SHALL IMMEDIATELY NOTIFY THE ARCHITECT OF ANY VARIANCE OR DISCREPANCY AFFECTING NEW CONSTRUCTION PRIOR TO PROCEEDING WITH WORK.
7. CONTRACTOR SHALL PROVIDE ALL NECESSARY BLOCKING IN WALLS FOR SUPPORT OF ALL EQUIPMENT, SHELVING, ACCESSORIES, SIGNAGE, AND OTHER DEVICES REQUIRED.
8. ALL PENETRATIONS SHALL RECEIVE CAULKING TO SEAL ANY TYPE OF ENERGY LOSS.
9. THE CONTRACTOR SHALL VERIFY AND COORDINATE ALL APPLICABLE DIMENSIONS OF FIXTURES AND EQUIPMENT SUPPLIED AND/OR INSTALLED BY OTHERS.
10. UPON COMPLETION OF PROJECT, G.C. TO OBTAIN ALL FINAL INSPECTIONS AS REQUIRED BY LOCAL JURISDICTIONS AND FURNISH OWNER WITH EVIDENCE OF ALL SUCH INSPECTIONS AND CERTIFICATES OF OCCUPANCY.
11. SIGNS, UNLESS NOTED OTHERWISE, ARE PROVIDED BY OWNER'S SIGN CONTRACTOR. OWNER'S SIGN VENDOR WILL PROVIDE MONUMENT SIGN BASE (CONCRETE, STONE, BRICK, ETC.) IF PROJECT REQUIRES DECORATIVE BASE. SEE SHEET L-1 TO VERIFY IF REQUIRED. GENERAL CONTRACTOR TO PROVIDE ROUGH-IN & FINAL CONNECTION AND BRAILLE EXIT SIGN.
12. GENERAL CONTRACTOR TO PROVIDE FOUR (4) 30 YARD DUMPSTERS DURING McDONALD RETAIL MOVE-IN.
13. GENERAL CONTRACTOR SHALL PROVIDE ONE SKILLED LABORER FOR ONE WEEK DURING McDONALD RETAIL MOVE-IN. (40 HOURS)
14. GENERAL CONTRACTOR SHALL BE RESPONSIBLE FOR SET-UP AND COORDINATION OF ALL THE UTILITY SERVICES FOR THE PROJECT.
15. ALL EXTERIOR FLOOR PLAN DIMENSIONS ARE TO EXTERIOR FACE OF MASONRY UNLESS OTHERWISE NOTED. ALL INTERIOR FLOOR PLAN DIMENSIONS ARE TO FACE OF FINISH UNLESS OTHERWISE NOTED.
16. FINAL KEYING TO BE COORDINATED WITH McDONALD FACILITY MANAGER AND PAID FOR BY McDONALD.
17. REFER TO "PROJECT MANUAL" FOR ALL OTHER INSTRUCTIONS & DIRECTIVES NOT SHOWN IN DRAWINGS. IF THERE IS A CONFLICT BETWEEN THE DRAWINGS AND PROJECT MANUAL, NOTIFY THE AREA CONSTRUCTION MANAGER FOR RESOLUTION.

GENERAL ABBREVIATIONS

A	ANNEALED	INSUL	INSULATION
AC	AIR CONDITIONING	MAX	MAXIMUM
ACT	ACOUSTIC CEILING TILE	MECH	MECHANICAL
AFF	ABOVE FINISH FLOOR	MFR	MANUFACTURER
AHU	AIR HANDLING UNIT	MIN	MINIMUM
AL	ALUMINUM	MO	MASONRY OPENING
ASPH	ASPHALT	MR	MOISTURE RESISTANT
CJ	CONTROL JOINT	MTL	METAL
CLNG	CEILING	NA	NOT APPLICABLE
CMU	CONCRETE MASONRY UNIT	NIC	NOT IN CONTRACT
COL	COLUMN	NOM	NOMINAL
CONC	CONCRETE	NTS	NOT TO SCALE
CONT	CONTINUOUS	OC	ON CENTER
CP	CONCRETE PAD	OPP	OPPOSITE
CT	CERAMIC TILE	OPT	OPTIONAL
CL	CENTERLINE	PF	PRE-FABRICATED
DBL	DOUBLE	PSF	POUNDS PER SQUARE FOOT
DF	DRINKING FOUNTAIN	PT	PRESSURE TREATED
DIA	DIAMETER	PTD	PAINTED
DIM	DIMENSION	QT	QUARRY TILE
DN	DOWN	R	RADIUS
DS	DOWNSPOUT	REBAR	REINFORCING BAR
EA	EACH	REF	REFERENCE
EJ	EXPANSION JOINT	REQD.	REQUIRED
ELEC	ELECTRICAL	RO	ROUGH OPENING
ELEV	ELEVATION	SB	SPLASHBLOCK
EQ	EQUAL	SIM	SIMILAR
EXIST	EXISTING	SPEC	SPECIFICATION
FD	FLOOR DRAIN	SS	STAINLESS STEEL
FE	FIRE EXTINGUISHER	STL	STEEL
FEC	FIRE EXTINGUISHER CABINET	STOR	STORAGE
FF	FINISH FLOOR	SUSP	SUSPENDED
FR	FIRE RATED	T	TEMPERED
FRP	FIBERGLASS REINFORCED PLASTIC	TYP	TYPICAL
		UNO	UNLESS NOTED OTHERWISE
GALV	GALVANIZED	VCT	VINYL COMPOSITION TILE
GYP BD	GYPSUM BOARD	VERT	VERTICAL
HC	HANDICAP	WD	WOOD
HDW	HARDWARE	WP	WATERPROOF
HM	HOLLOW METAL	WWF	WELDED WIRE FABRIC
HT	HEIGHT		
HVAC	HEATING, VENTILATION, AIR CONDITIONING		

MCDONALD'S ABBREVIATIONS

BM	BRAKE METAL	LAM	LAMINATE
C	ALUMINUM CANOPY	LE	ACCENT LIGHTING
CG	CORNER GUARD	LP	LOW POINT
CT	WALL TILE	LL	LEVEL LANDING
DE	DECOR ELEMENT	MF	METAL FASCIA
DMB	DIGITAL MENU BOARD	MS	MOP SINK
DS	DROP SOFFIT	PB	PIPE BILLARD
D/T	DRIVE-THRU	PT	RMHC COIN COLLECTOR
FB	FILL BOX	RL	ROOF LADDER
F/C	FREEZER/COOLER	S	McDONALD'S SIGNAGE
FP	FIBER CEMENT PANELS 1	SCH	SHLUTER
GC	GENERAL CONTRACTOR	SSBB	SELF SERVE BEVERAGE BAR
HP	HIGH POINT	UN	ALUMINUM CANOPY UNDERSCORE
L	LIGHT FIXTURE		

LINGLE DESIGN GROUP INC
158 WEST MAIN STREET
LENA, IL 61048
815.369.9155
1764 BLAKE ST
DENVER, CO 8020
303.974.5873
WWW.LINGLEDESIGN.COM

© ALL DRAWINGS AND WRITTEN MATERIAL CONTAINED HEREIN ARE THE PROPERTY OF THE LINGLE DESIGN GROUP, INC. THEY MAY NOT BE REVISED, COPIED, REUSED, OR DISCLOSED IN ANY MANNER WITHOUT WRITTEN AUTHORIZATION FROM THE ARCHITECT.

CARL LINGLE LICENSED 7997 KANSAS ARCHITECT

04-08-26

STATE ID: 150404

PROJECT #: 26-028

NATIONAL #: 44655

DRAWN BY: CR

CHECKED BY: JK

DATE:
04/08/26 - PERMIT / BID SET

REVISIONS
1 05/07/26 - QC COMMENTS/ADA UPDATE
2 06/22/26 - CITY COMMENTS / DECOR

CLIENT
McDonald's USA, LLC

PROTOTYPE
BB20 4584 WW-HB
ISSUE DATE 02/25

ADDRESS
707 1/2 METROPOLITAN AVE
LEAVENWORTH, KS 66048

SHEET TITLE
GENERAL NOTES

SHEET NUMBER:
G1.0

GENERAL

1. THIS PROJECT SHALL COMPLY WITH ALL LOCAL, STATE & FEDERAL ACCESSIBILITY CODES/STANDARDS. IF A CONFLICT EXISTS BETWEEN ANY OF THESE STANDARDS, THEN THE MOST STRINGENT CODE SHALL APPLY.

ENTRANCES

1. IF ALL PUBLIC ENTRANCES ARE NOT ACCESSIBLE, PROVIDE AN INTERNATIONAL SYMBOL OF ACCESSIBILITY SIGN AT THE ACCESSIBLE ENTRANCE AND ADDITIONAL DIRECTIONAL SIGNS, AS REQUIRED, VISIBLE FROM APPROACHING PEDESTRIAN WAYS TO THE INACCESSIBLE ENTRANCE.

2. EVERY REQUIRED ENTRANCE OR PASSAGE DOORWAY SHALL BE OF A SIZE AS TO PERMIT THE INSTALLATION OF A DOOR NOT LESS THAN 3' IN WIDTH AND NOT LESS THAN 6'-8" IN HEIGHT. DOORS SHALL BE CAPABLE OF OPENING AT LEAST 90 DEGREES AND SHALL BE SO MOUNTED THAT THE CLEAR WIDTH OF THE DOORWAY IS NOT LESS THAN 32".

3. WHERE A PAIR OF DOORS IS UTILIZED, AT LEAST ONE OF THE DOORS SHALL PROVIDE A CLEAR UNOBSTRUCTED OPENING WIDTH OF 32" WITH THE LEAF POSITIONED AT AN ANGLE OF 90 DEGREES FROM ITS CLOSED POSITION.

4. LATCHING AND LOCKING DOORS THAT ARE HAND ACTIVATED AND WHICH ARE IN A PATH OF TRAVEL SHALL BE OPERABLE WITH A SINGLE EFFORT BY LEVER TYPE HARDWARE, PANIC BARS, PUSH-PULL ACTIVATING BARS, OR OTHER HARDWARE DESIGNED TO PROVIDE PASSAGE WITHOUT REQUIRING THE ABILITY TO GRASP THE OPENING HARDWARE.

5. HAND ACTIVATED DOOR OPENING HARDWARE SHALL BE CENTERED BETWEEN 30" AND 44" ABOVE THE FLOOR.

6. THE MINIMUM REQUIRED MANEUVERING CLEARANCES ON EACH SIDE OF AN ENTRANCE OR PASSAGE DOOR SHALL BE CLEAR, AND THE FLOOR SLOPE SHALL NOT EXCEED 2%.

7. THE FLOOR OR LANDING SHALL BE NOT MORE THAN 1/2" LOWER THAN THE THRESHOLD OF THE DOORWAY. CHANGE IN LEVEL BETWEEN 1/4" AND 1/2" SHALL BE BEVELED WITH A SLOPE NO GREATER THAN 1:2.

8. THE BOTTOM 10" OF ALL DOORS EXCEPT AUTOMATIC AND SLIDING SHALL HAVE A SMOOTH UNINTERRUPTED SURFACE TO ALLOW THE DOOR TO BE OPENED BY A WHEELCHAIR FOOTREST WITHOUT CREATING A TRAP OR HAZARDOUS CONDITION. WHERE NARROW FRAME DOORS ARE USED, A 10" HIGH SMOOTH PANEL SHALL BE INSTALLED ON THE PUSH SIDE OF THE DOOR WHICH WILL ALLOW THE DOOR TO BE OPENED BY A WHEELCHAIR FOOTREST WITHOUT CREATING A TRAP OR HAZARDOUS CONDITION.

9. MAXIMUM EFFORT TO OPERATE DOORS SHALL NOT EXCEED 8.5 POUNDS FOR EXTERIOR DOORS AND 5 POUNDS FOR INTERIOR DOORS, SUCH PULL OR PUSH EFFORT BEING APPLIED AT RIGHT ANGLES TO DOORS AND AT THE CENTER PLANE OF SLIDING OR FOLDING DOORS. COMPENSATING DEVICES OR AUTOMATIC DOOR OPERATORS MAY BE UTILIZED TO MEET THE ABOVE STANDARDS. WHEN FIRE DOORS ARE REQUIRED, THE MAXIMUM EFFORT TO OPERATE THE DOOR MAY BE INCREASED NOT TO EXCEED 15 POUNDS.

DOORS

1. PROVIDE DOOR (LEVER) HARDWARE ON ALL DOORS.

2. PROVIDE PANIC HARDWARE ON EXIT DOORS FROM PUBLIC ASSEMBLY AREAS.

FLOORS AND LEVELS

1. IN BUILDINGS AND FACILITIES, FLOORS OF A GIVEN STORY SHALL BE A COMMON LEVEL THROUGHOUT, OR SHALL BE CONNECTED BY PEDESTRIAN RAMPS, PASSENGER ELEVATORS OR SPECIAL ACCESS LIFTS.

2. FLOOR SURFACES SHALL BE SLIP-RESISTANT.

CORRIDORS AND AISLES

1. EVERY CORRIDOR SERVING AN OCCUPANT LOAD OF 10 OR MORE SHALL BE NOT LESS IN WIDTH THAN 44".

2. EVERY PORTION OF EVERY BUILDING IN WHICH ARE INSTALLED SEATS, TABLES, MERCHANDISE, EQUIPMENT OR SIMILAR MATERIALS SHALL BE PROVIDED WITH WITH AISLES LEADING TO AN EXIT.

3. EVERY AISLE SHALL BE NOT LESS THAN 3' WIDE IF SERVING ONLY ONE SIDE, AND NOT LESS THAN 3'-6" WIDE IF SERVING BOTH SIDES. SUCH MINIMUM WIDTH SHALL BE MEASURED AT THE POINT FARTHEST FROM AN EXIT, CROSS AISLE OR FOYER AND SHALL BE INCREASED BY 1-1/2" FOR EACH 5' IN LENGTH TOWARD THE EXIT, CROSS AISLE OR FOYER.

SANITARY FACILITIES

1. WHEN SANITARY FACILITIES ARE LOCATED ON ACCESSIBLE FLOORS OF A BUILDING, THEY SHALL BE MADE ACCESSIBLE TO THE PHYSICALLY DISABLED.

2. WHERE SEPARATE FACILITIES ARE PROVIDED FOR NON-DISABLED PERSONS OF EACH SEX, SEPARATE FACILITIES SHALL BE PROVIDED FOR DISABLED PERSONS OF EACH SEX ALSO. WHERE UNISEX FACILITIES ARE PROVIDED FOR NON-DISABLED PERSONS, SUCH UNISEX FACILITIES MAY BE PROVIDED FOR THE THE DISABLED.

3. ALL DOORWAYS LEADING TO SANITARY FACILITIES SHALL HAVE 32" CLEAR UNOBSTRUCTED OPENINGS.

4. PROVIDE SIGNAGE AS SHOWN IN THIS SET.

5. ON THE WALL ADJACENT TO THE MEN'S AND WOMEN'S SANITARY FACILITIES BRAILLE SIGNAGE SHALL BE PROVIDED. LETTERS BE RAISED 1/32", UPPER CASE AND ACCOMPANIED WITH GRADE 2 BRAILLE. RAISED CHARACTERS SHALL BE MINIMUM 5/8" HIGH, PICTOGRAMS MINIMUM 6" HIGH, CHARACTERS AND SYMBOLS SHALL CONTRAST WITH THEIR BACKGROUND. THE SIGN SHALL BE LOCATED SO THAT A MINIMUM CLEAR FLOOR SPACE OF 18"X18", CENTERED ON THE TACTILE CHARACTERS, IS PROVIDED BEYOND THE ARC OF ANY DOOR SWING BETWEEN THE CLOSED POSITION AND 45° OPEN POSITION. MOUNTING HEIGHT SHALL BE 60" ABOVE THE FINISHED FLOOR TO THE CENTER OF THE SIGN.

6. WATER CLOSET COMPARTMENTS SHALL BE EQUIPPED WITH A DOOR THAT IS SELF CLOSING, AND SHALL HAVE A CLEAR UNOBSTRUCTED OPENING WIDTH OF 32" WHEN LOCATED AT THE END AND 34" WHEN LOCATED AT THE SIDE WITH THE DOOR POSITIONED AT AN ANGLE OF 90 DEGREES FROM ITS CLOSED POSITION.

TOILET ROOM FIXTURES AND ACCESSORIES

1. TOILET FLUSH CONTROLS SHALL BE OPERABLE WITH ONE HAND, AND SHALL NOT REQUIRE TIGHT GRASPING, PINCHING OR TWISTING OF THE WRIST. CONTROLS FOR THE FLUSH VALVES SHALL BE MOUNTED ON THE WIDE SIDE OF THE TOILET AREAS, NO MORE THAN 44" ABOVE THE FLOOR. THE FORCE REQUIRED TO ACTIVATE CONTROLS SHALL BE NO GREATER THAN 5 POUNDS.

2. WHERE URINALS ARE PROVIDED, AT LEAST ONE WITH A RIM PROJECTING A MINIMUM OF 13.5" FROM THE WALL AND AT A MAXIMUM OF 17" ABOVE THE FLOOR SHALL BE PROVIDED.

3. FLUSH CONTROLS SHALL BE OPERABLE WITH ONE HAND AND SHALL NOT REQUIRE TIGHT GRASPING, PINCHING OR TWISTING OF THE WRIST AND SHALL BE MOUNTED NO MORE THAN 44" ABOVE THE FLOOR. THE FORCE REQUIRED TO ACTIVATE CONTROLS SHALL BE NO GREATER THAN 5 POUNDS PER FOOT.

4. LAVATORIES SHALL BE MOUNTED WITH A CLEARANCE OF AT LEAST 29" FROM THE FLOOR TO THE BOTTOM OF THE APRON WITH KNEE CLEARANCE UNDER THE FRONT LIP EXTENDING A MINIMUM OF 30" IN WIDTH WITH 8" MINIMUM DEPTH AT THE TOP. TOE CLEARANCE SHALL BE THE SAME WIDTH AND SHALL BE A MINIMUM OF 9" HIGH FROM THE FLOOR AND A MINIMUM OF 17" DEEP FROM THE FRONT OF THE LAVATORY.

5. A PROJECTION OF A LAVATORY BOWL INTO THE 8" CLEAR SPACE, THEREBY REDUCING THE CLEAR HEIGHT BELOW THE LAVATORY TO NO LESS THAN 27" AT 8" BACK FROM THE APRON, MEETS THE REQUIREMENT FOR PROVIDING KNEE CLEARANCE. A MAXIMUM HEIGHT OF 34" TO THE TOP OF THE LAVATORY IS REQUIRE.

6. HOT WATER AND DRAIN PIPES UNDER LAVATORIES SHALL BE INSULATED OR OTHERWISE COVERED. THERE SHALL BE NO SHARP OR ABRASIVE SURFACES UNDER LAVATORIES.

7. FAUCET CONTROLS AND OPERATING MECHANISMS SHALL BE OPERABLE WITH ONE HAND AND SHALL NOT REQUIRE TIGHT GRASPING, PINCHING OR TWISTING OF THE WRIST. THE FORCE REQUIRED TO ACTIVATE CONTROLS SHALL BE NO MORE THAN 5 POUNDS. LEVER OPERATED, PUSH TYPE AND ELECTRONICALLY CONTROLLED MECHANISMS ARE EXAMPLES OF ACCEPTABLE DESIGNS. SELF-CLOSING VALVES ARE ALLOWED IF THE FAUCET REMAINS OPEN FOR AT LEAST 10 SECONDS.

GRAB BARS

1. HORIZONTAL GRAB BARS SHALL BE LOCATED ON EACH SIDE, OR ONE SIDE AND THE BACK OF THE PHYSICALLY DISABLED TOILET STALL OR COMPARTMENT AND SHALL BE SECURELY ATTACHED 33"-36" ABOVE AND PARALLEL TO THE FLOOR TO THE TOP OF THE BAR. VERTICAL GRAB BAR SHALL BE LOCATED ON SIDE OF THE PHYSICALLY DISABLED TOILET STALL OR COMPARTMENT AND SHALL BE SECURELY ATTACHED 39"-41" ABOVE AND PERPENDICULAR TO THE FLOOR TO THE BOTTOM OF THE BAR. GRAB BARS SHALL NOT ROTATE WITHIN THEIR FITTINGS.

2. HORIZONTAL GRAB BARS AT THE SIDE SHALL BE AT LEAST 42" LONG, INSTALLED 12" FROM THE REAR WALL, VERTICAL GRAB BAR AT THE SIDE WALL SHALL BE AT LEAST 18" HIGH, INSTALLED 39"-41" CENTERED FROM BACK WALL, AND HORIZONTAL GRAB BARS AT THE BACK SHALL BE NOT LESS THAN 36" LONG, & EXTENDING 12" MINIMUM ON ONE SIDE OF THE WATER CLOSET CENTERLINE AND 24" MINIMUM ON THE OTHER SIDE.

3. THE DIAMETER OR WIDTH OF THE GRIPPING SURFACES OF A GRAB BAR SHALL BE 1-1/4" TO 1-1/2" OR THE SHAPE SHALL PROVIDE AN EQUIVALENT GRIPPING SURFACE.

4. IF THE GRAB BARS ARE MOUNTED ADJACENT TO A WALL, THE SPACE BETWEEN THE WALL AND THE GRAB BARS SHALL BE 1-1/2".

5. A GRAB BAR AND ANY WALL OR OTHER SURFACE ADJACENT TO IT SHALL BE FREE OF ANY SHARP OR ABRASIVE ELEMENTS.

6. GRAB BARS SHALL NOT ROTATE WITHIN THEIR FITTINGS.

7. EDGES SHALL HAVE A MINIMUM RADIUS OF 1/8".

8. GRAB BAR, TUB AND SHOWER SEATS, FASTENERS AND MOUNTING DEVICES SHALL BE DESIGNED FOR 250 POUNDS PER LINEAR FOOT LOAD.

9. THE SPACE BETWEEN THE GRAB BAR & PROJECTING OBJECTS BELOW SHALL BE 1 1/2" MINIMUM. THE SPACE BETWEEN THE GRAB BAR & PROJECTING OBJECTS ABOVE SHALL BE 12" MINIMUM.

ADDITIONAL REQUIREMENTS

1. THE CENTER OF RECEPTACLE OUTLETS SHALL BE NOT LESS THAN 15" ABOVE THE FLOOR OR WORKING PLATFORM.

2. THE CENTER OF THE GRIP OF THE OPERATING HANDLE OF SWITCHES INTENDED TO BE USED BY THE OCCUPANT OF THE ROOM OR AREA TO CONTROL LIGHTING AND RECEPTACLE OUTLETS, APPLIANCES, OR COOLING, HEATING AND VENTILATING EQUIPMENT SHALL BE NOT LESS THAN 36" NOR MORE THAN 48" ABOVE THE FLOOR OR WORKING PLATFORM.

3. THE CENTER OF FIRE ALARM INITIATING DEVICES (BOXES) SHALL BE INSTALLED PER BUILDING CODE & FIRE DEPARTMENT REQUIREMENTS.

4. IF EMERGENCY WARNING SYSTEMS ARE REQUIRED, THEY SHALL ACTIVATE A MEANS OF WARNING THE HEARING IMPAIRED. FLASHING VISUAL WARNING SHALL BE A FREQUENCY OF NOT MORE THAN 60 FLASHES PER MINUTE.

SIGNS & IDENTIFICATION NOTE

1. THE INTERNATIONAL SYMBOL OF ACCESSIBILITY SHALL BE THE STANDARD USED TO IDENTIFY FACILITIES THAT ARE ACCESSIBLE TO AND USABLE BY PHYSICALLY DISABLED PERSONS AS SET FORTH IN ADA AND AS SPECIFICALLY REQUIRED IN THIS SECTION.THE INTERNATIONAL SYMBOL OF ACCESSIBILITY SHALL CONSIST OF A WHITE FIGURE ON A BLUE BACKGROUND. THE BLUE SHALL BE EQUAL TO COLOR NO. 15090 IN FEDERAL STANDARD 599B.

2. LETTERS AND NUMBERS ON SIGNS SHALL HAVE A WIDTH-TO-HEIGHT RATIO OF BETWEEN 3:5 AND 1:1 AND A STROKE WIDTH-TO-HEIGHT RATIO BETWEEN 1:5 AND 1:10.

3. CHARACTERS AND NUMBERS ON SIGNS SHALL BE SIZED ACCORDING TO THE VIEWING DISTANCE FROM WHICH THEY ARE TO BE READ. THE MINIMUM HEIGHT IS MEASURED USING AN UPPER CASE X. LOWER CASE CHARACTERS ARE PERMITTED. FOR SIGNS SUSPENDED OR PROJECTED ABOVE THE FINISH FLOOR THE MINIMUM CHARACTER HEIGHT SHALL BE 3".

4. CHARACTERS AND SYMBOLS SHALL CONTRAST WITH THEIR BACKGROUND, EITHER LIGHT CHARACTERS ON A DARK BACKGROUND OR DARK CHARACTERS ON A LIGHT BACKGROUND.

5. WHEN RAISED CHARACTERS OR SYMBOLS ARE USED, THEY SHALL CONFORM TO THE FOLLOWING:

   A. LETTERS AND NUMBERS ON SIGNS SHALL BE RAISED 1/32" MINIMUM AND SHALL BE SANS-SERIF UPPERCASE CHARACTERS ACCOMPANIED BY GRADE 2 BRAILLE.

   B. RAISED CHARACTERS OR SYMBOLS SHALL BE A MINIMUM OF 5/8" HIGH.

   C. PICTORIAL SYMBOL SIGNS (PICTOGRAMS) SHALL BE ACCOMPANIED BY THE EQUIVALENT VERBAL DESCRIPTION PLACED DIRECTLY BELOW THE PICTOGRAM. THE BORDER DIMENSION OF THE PICTOGRAM SHALL BE A MINIMUM OF 6" IN HEIGHT.

6. CONTRACTED GRADE 2 BRAILLE SHALL BE USED WHEREVER BRAILLE SYMBOLS ARE SPECIFICALLY REQUIRED IN OTHER PORTIONS OF THESE REGULATIONS. DOTS SHALL BE .1" ON CENTERS IN EACH CELL WITH .3" SPACE BETWEEN CELLS. DOTS SHALL BE RAISED .3" ABOVE THE BACKGROUND.

7. WHEN PERMANENT IDENTIFICATION IS PROVIDED FOR ROOMS AND SPACES, RAISED LETTERS SHALL BE PROVIDED AND SHALL BE ACCOMPANIED BY BRAILLE. SIGNS SHALL BE INSTALLED ON THE WALL ADJACENT TO THE LATCH SIDE OF THE DOOR. WHERE THERE IS NO WALL SPACE ON THE LATCH SIDE, INCLUDING AT DOUBLE LEAF DOORS, SIGNS SHALL BE PLACED ON THE NEAREST ADJACENT WALL. MOUNTING HEIGHT SHALL BE 60" ABOVE THE FINISHED FLOOR TO THE CENTERLINE OF THE SIGN. SIGN SHALL BE MOUNTED SO THAT A CLEAR FLOOR SPACE OF 18"x18" MINIMUM, CENTER ON THE TACTILE CHARACTERS, IS PROVIDED BEYOND THE ARC OF ANY DOOR SWING BETWEEN THE CLOSED POSITION & 45 DEGREE OPEN POSITION.

TABLES AND SEATING DISTRIBUTION NOTES:

1. AT LEAST 5% OF ALL SEATING AND STANDING SPACES ARE TO BE ACCESSIBLE AND LOCATED ON AN ACCESSIBLE ROUTE. THE ACCESSIBLE TABLES ARE ALSO REQUIRED TO BE DISTRIBUTED THROUGHOUT ALL DINING AREAS.

2. ACCESSIBLE ROUTE TO SEATING LOCATIONS
   A) A 36" MINIMUM WIDE ACCESSIBLE ROUTE IS REQUIRED TO CONNECT THE ACCESSIBLE TABLES TO EACH OF THE RESTAURANT ELEMENTS.
   B) THE 36" ROUTE SHOULD TAKE INTO ACCOUNT CUSTOMERS SEATED AT THE TABLES. IT SHOULD NOT BE MEASURED WITH THE SEATS PUSHED COMPLETELY UNDER THE TABLES.

3. MINIMUM NUMBER OF ACCESSIBLE TABLES
   A) A MINIMUM OF 5% OF SEATING AND STANDING LOCATIONS ARE REQUIRED TO BE ACCESSIBLE. THIS IS CALCULATED BY ADDING THE TOTAL NUMBER OF SEATS OR STANDING TABLE SPACES AND MULTIPLYING BY .05.

4. SEATING DISPERSION
   A) THE ACCESSIBLE TABLES ARE REQUIRED TO BE DISPERSED THROUGHOUT THE VARIOUS TYPES OF DINING AREAS INCLUDING PLAYPLACE SEATING AND PARTY ROOMS.
   B) IF OUTLETS ARE PROVIDED IN DINING AREA FOR CUSTOMERS USE, AN OUTLET MUST BE PROVIDED AT AN ACCESSIBLE TABLE.
   C) IF TELEVISIONS ARE PROVIDED IN DINING AREA, A LINE OF SIGHT MUST BE PROVIDED TO THE TELEVISION FROM AN ACCESSIBLE TABLE.
   D) THE OPEN SPACE AT THE ENDS OF BOOTHS IS NOT AN ACCEPTABLE ACCESSIBLE SEATING LOCATION.
   E) MOVEABLE CHAIRS MAY BE POSITIONED AT ACCESSIBLE SEATING LOCATION FOR USE BY AMBULATORY CUSTOMERS.

5. REQUIRED KNEE SPACE UNDER ACCESSIBLE TABLES TO BE MINIMUM OF 27" HIGH, 30" WIDE AND 19" DEEP. TABLE TOP HEIGHT TO BE BETWEEN 28" & 34"AFF.

TYPICAL ACCESSIBILITY DETAILS

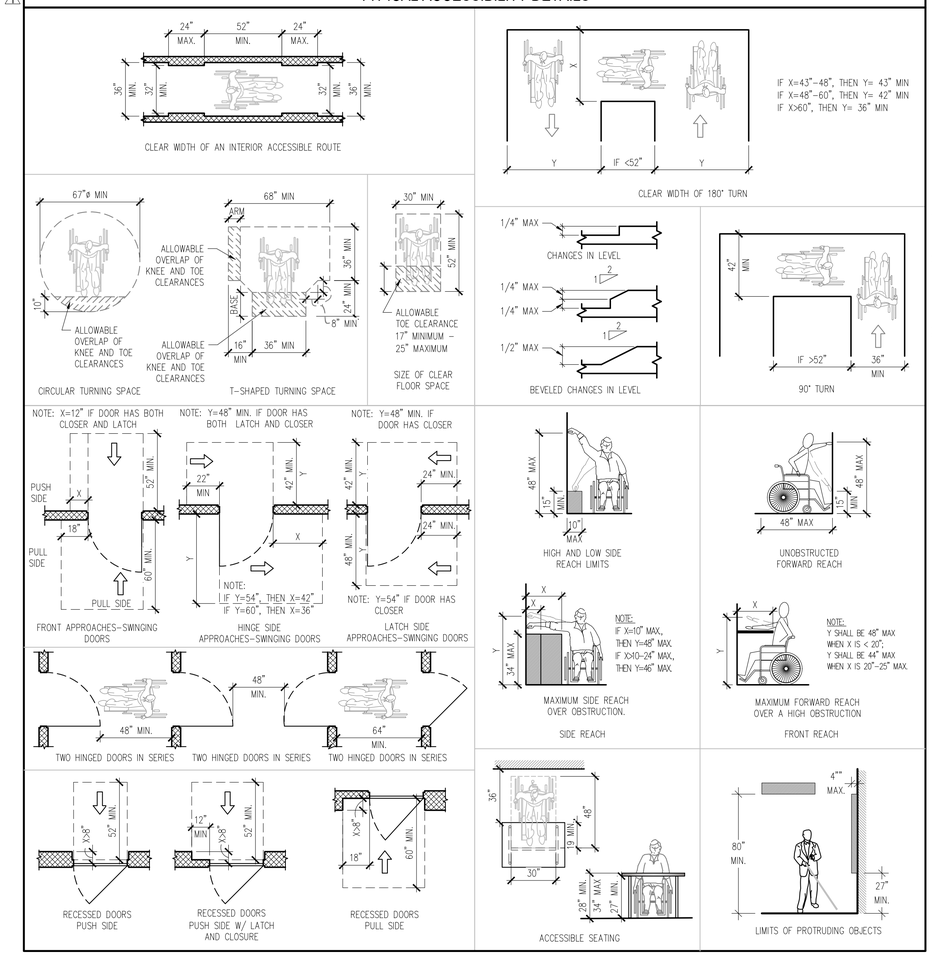

LINGLE DESIGN GROUP INC
158 WEST MAIN STREET
LENA, IL 61048
815.369.9155
1764 BLAKE ST
DENVER, CO 8020
303.974.5873
WWW.LINGLEDESIGN.COM

© ALL DRAWINGS AND WRITTEN MATERIAL CONTAINED HEREIN ARE THE PROPERTY OF THE LINGLE DESIGN GROUP, INC. THEY MAY NOT BE REVISED, COPIED, REUSED, OR DISCLOSED IN ANY MANNER WITHOUT WRITTEN AUTHORIZATION FROM THE ARCHITECT.

CARL LINGLE LICENSED 7997 KANSAS ARCHITECT

04-08-26

STATE ID: 150404
NATIONAL #: 44655
PROJECT #: 26-028
DRAWN BY: CR
CHECKED BY: JK

DATE:
04/08/26 - PERMIT / BID SET

REVISIONS
1. 05/07/26 - QC COMMENTS/ADA UPDATE
2. 06/22/26 - CITY COMMENTS / DECOR

CLIENT
McDonald's USA, LLC

PROTOTYPE
BB20 4584 WW-HB
ISSUE DATE 02/25

ADDRESS
707 1/2 METROPOLITAN AVE
LEAVENWORTH, KS 66048

SHEET TITLE
GENERAL ACCESSIBLITY NOTES

SHEET NUMBER:
G2.0

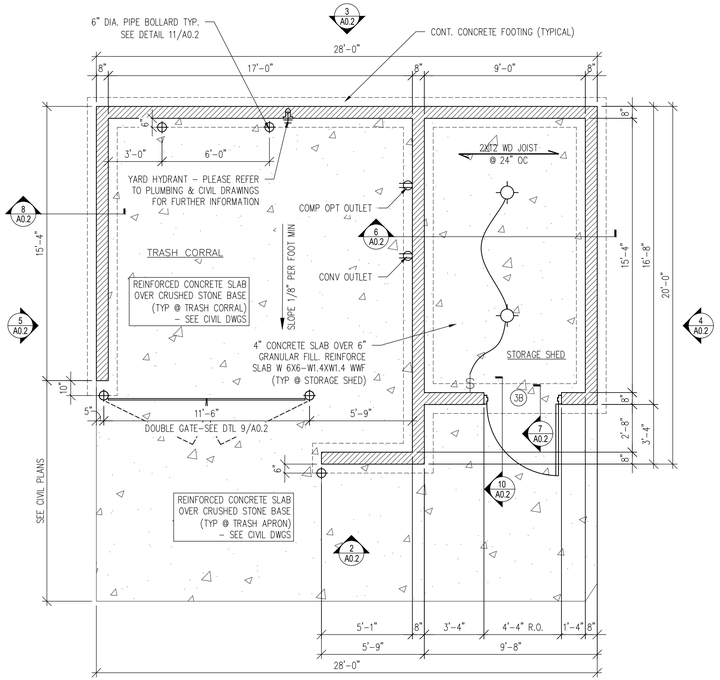

1 TRASH ENCLOSURE PLAN W/ SHED

1/4" = 1'-0"

NOTES:
– INCANDESCENT LIGHT FIXTURE SHALL BE FURNISHED. WIRE GUARD, 40 WATT LAMP, AND SURFACE MOUNT. PASS & SEMORE–#44 OR LIGHTING LTD–#1743–2000 AWG
– TURBINE FAN SHALL BE FURNISHED AND INSTALLED IN SHED ROOF
– TRASH CORRAL POWER: 3/4"C–4#10 & 1/0 GND TO A 30A–2P AND A 20A–1P CB IN PANEL AP–2 FOR TRASH COMPACTOR AND WP GFCI DCO. PROVIDE 30A–2P NF DISCONNECT FOR TRASH COMPACTOR. VERIFY EXACT LOCATION AND ALL REQUIREMENTS OF TRASH CORRAL IN FIELD.

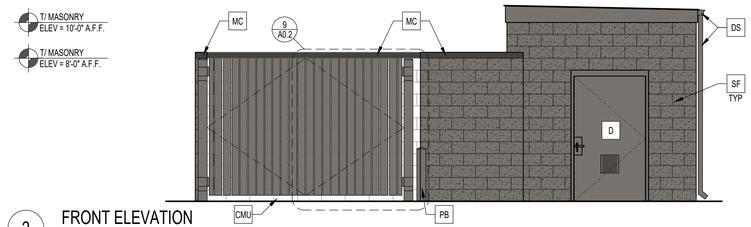

2 FRONT ELEVATION

1/4" = 1'-0"

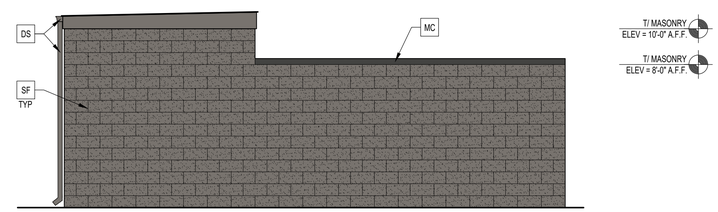

3 REAR ELEVATION

1/4" = 1'-0"

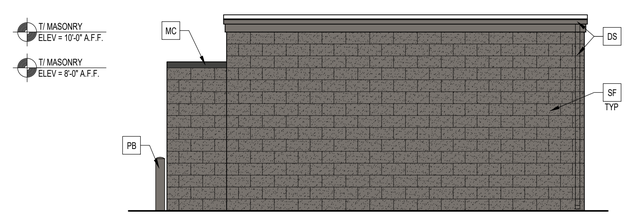

4 RIGHT SIDE ELEVATION

1/4" = 1'-0"

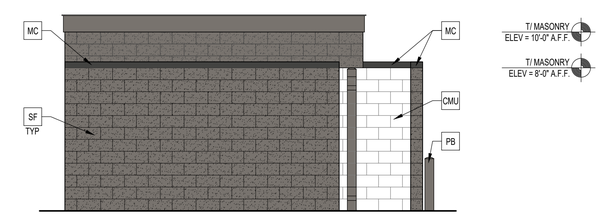

5 LEFT SIDE ELEVATION

1/4" = 1'-0"

KEY NOTES:

- CMU — CMU SEMI-GLOSS PAINTED FINISH
- D — HOLLOW METAL DOOR PAINT: GAUNTLET GRAY SW 7019 BY SHERWIN WILLIAMS
- DS — GUTTER AND DOWNSPOUT PAINT: GAUNTLET GRAY SW 7019 BY SHERWIN WILLIAMS
- PB — PIPE BOLLARD PAINT: GAUNTLET GRAY SW 7019 BY SHERWIN WILLIAMS
- SF — 8" SPLIT FACE CMU BLOCK BY NORTHFIELD BLOCK ASH OR EQUAL COLOR: MATCH MAIN BUILDING, PRISM PIGMENTS OR EQUAL MORTAR TO MATCH BLOCK
- MC — METAL COPING – UNA-CLAD BY FIRESTONE ANNODIZED ALUMINUM COLOR: RAL 7022

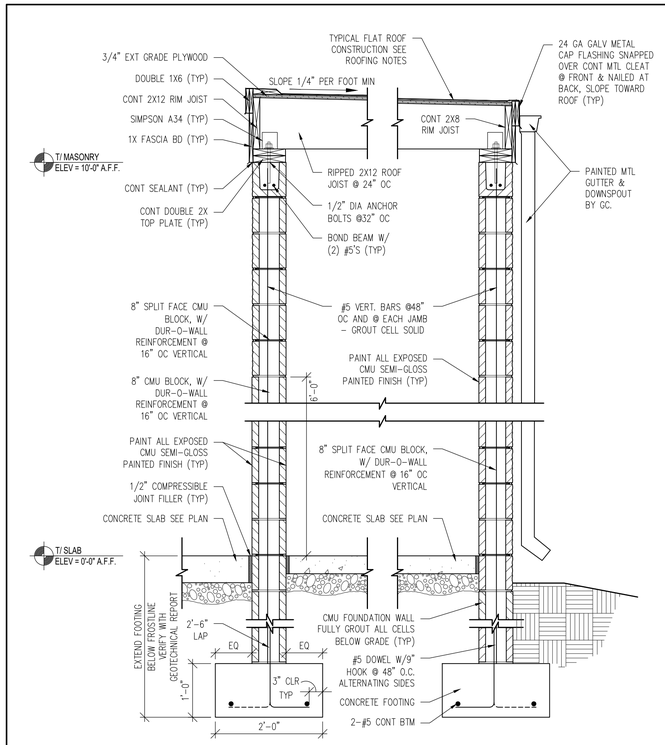

6 TYPICAL STORAGE SHED SECTION

3/4" = 1'-0"

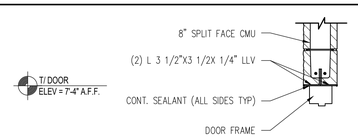

7 DOOR HEADER DETAIL

3/4" = 1'-0"

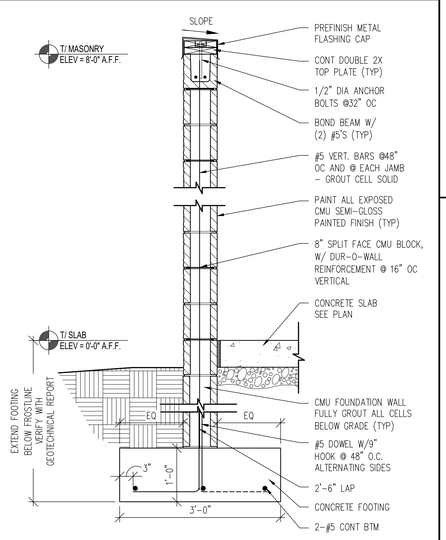

8 TYPICAL WALL SECTION

3/4" = 1'-0"

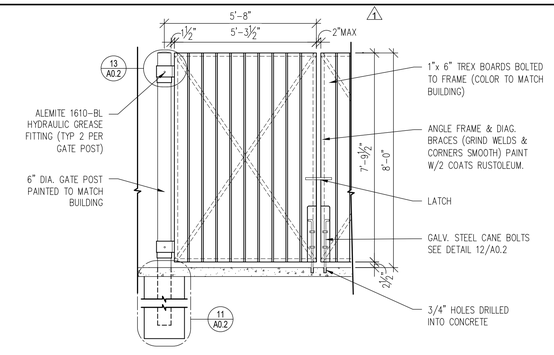

9 TYPICAL GATE DETAIL

3/8" = 1'-0"

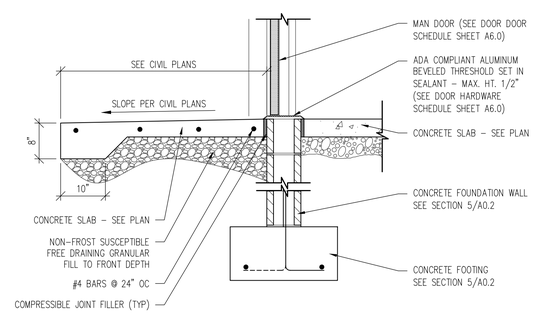

10 STORAGE SHED DOOR SILL DETAIL

3/4" = 1'-0"

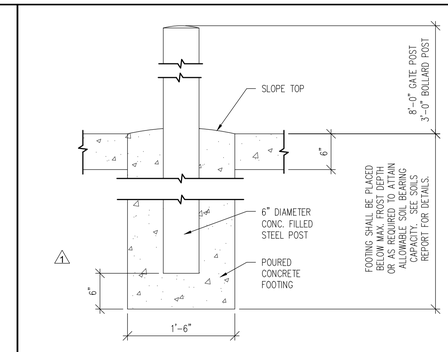

11 TYPICAL BOLLARD AND GATE POST DETAIL

1" = 1'-0"

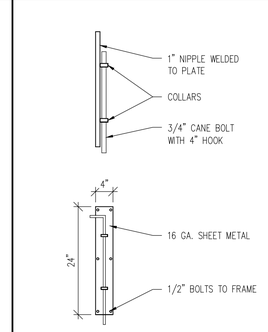

12 BOLT DETAILS

N.T.S.

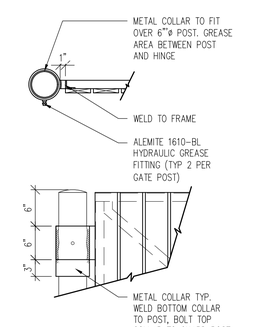

13 HINGE DETAILS

N.T.S.

LINGLE DESIGN GROUP INC
158 WEST MAIN STREET
LENA, IL 61048
815.369.9155
1764 BLAKE ST
DENVER, CO 8020
303.974.5873
WWW.LINGLEDESIGN.COM

© ALL DRAWINGS AND WRITTEN MATERIAL CONTAINED HEREIN ARE THE PROPERTY OF THE LINGLE DESIGN GROUP, INC. THEY MAY NOT BE REVISED, COPIED, REUSED, OR DISCLOSED IN ANY MANNER WITHOUT WRITTEN AUTHORIZATION FROM THE ARCHITECT.

CARL LINGLE LICENSED 7997 KANSAS ARCHITECT

04-08-26

STATE ID: 150404

PROJECT #: 26-028

NATIONAL #: 44655

DRAWN BY: CR

CHECKED BY: JK

DATE:
04/08/26 - PERMIT / BID SET

REVISIONS
1. 05/07/26 - QC COMMENTS/ADA UPDATE
2. 06/22/26 - CITY COMMENTS / DECOR

CLIENT
McDonald's USA, LLC

PROTOTYPE
BB20 4584 WW-HB
ISSUE DATE 02/25

ADDRESS
707 1/2 METROPOLITAN AVE
LEAVENWORTH, KS 66048

SHEET TITLE
TRASH ENCLOSURE PLAN AND DETAILS

SHEET NUMBER:
A0.2

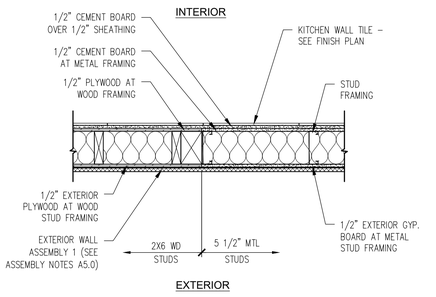

1 TRANSITION DETAIL

1" = 1'-0"

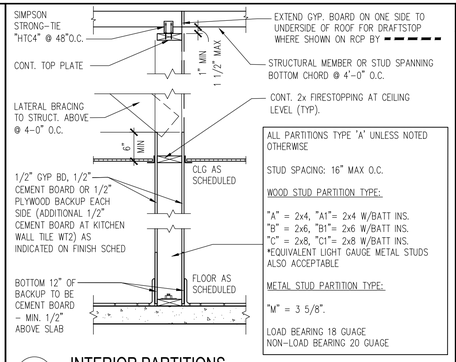

2 INTERIOR PARTITIONS

3/4" = 1'-0"

GENERAL NOTES

1. EXTERIOR DIMENSIONS ARE TO COLUMN REFERENCE LINES, FACE OF FOUNDATION AND ROUGH OPENINGS. UNLESS OTHERWISE NOTED. INTERIOR DIMENSIONS ARE TO FACE OF INTERIOR WALL BOARD.
2. SEE 5/A5.0 FOR EXTERIOR WALL ASSEMBLY TYPES. SEE 2/A1.0 FOR INTERIOR PARTITION TYPES. INTERIOR PARTITIONS ARE TYPE 'A' UNLESS NOTED OTHERWISE.
3. SEE SHEET A6.0 FOR WINDOW SCHEDULE
4. SEE SHEET A6.0 FOR DOOR SCHEDULE
5. SEE SHEET A1.4 AND DECOR PLANS FOR ROOM FINISHES
6. GC TO PROVIDE ADA SIGNAGE PACKAGE AND INSTALL SIGNS AT LOCATIONS AND POSITIONS INDICATED IN PACKAGE OR AS REQUIRED BY LOCAL CODES. SIGNAGE PACKAGE SUPPLIED BY: FRANKE/S2K 1-800-423-5247 WWW.FRANKESUPPLY.COM, EMAIL: FS-FRANKESUPPLY.US@FRANKE.COM, SEE SHEET T3.0.
7. MAXIMUM OCCUPANCY SIGN TO BE POSTED PER LOCAL CODE. SIGN SUPPLIED BY: FRANKE/S2K 1-800-423-5247 WWW.FRANKESUPPLY.COM, EMAIL: FS-FRANKESUPPLY.US@FRANKE.COM
8. SEE SITE PLAN FOR SIDEWALKS, RAMPS, ETC.
9. GC TO COORDINATE ALL REQUIRED BLOCKING FOR WALL HUNG EQUIPMENT, SHELVES, ETC. FOR PROPER INSTALLATION HEIGHTS.
10. KNOX BOX TO BE INSTALLED BY GENERAL CONTRACTOR PER LOCAL CODE AS REQUIRED. MODEL AND LOCATION TO BE COORDINATED WITH FIRE MARSHALL.
11. DASHED LINES @ DOORS, RESTROOMS, & FIXTURES REPRESENT CLEAR FLOOR MANEUVERING CLEARANCES AS REQUIRED BY THE ACCESSIBILITY CODE. SEE SHEETS G2.0 AND A4.0. CLEARANCES MUST BE MAINTAINED WITHOUT EXCEPTION. IF CONDITIONS PREVENT ANY CLEAR FLOOR SPACE FROM BEING MAINTAINED, CONTACT THE ARCHITECT FOR RESOLUTION.

KEY NOTES

- C — ALUMINUM CANOPY SYSTEM ABOVE – SEE 5/A5.0 FOR NOTES – SEE ROOF PLAN FOR DIMENSIONS, SEE ELEVATION FOR COLORS.
- CB — 1/2" CEMENT BOARD AT EACH SIDE (EXTENT OF METAL FRAMING) TO REPLACE PLYWOOD BACKING SEE FINISH SCHEDULE AND M3.0 FOR ADDITIONAL INFORMATION AND REQUIRED BLOCKING
- CG — G.C. TO PROVIDE 4"x4"x5'-0" HIGH STAINLESS STEEL CORNER GUARDS AT ALL EXPOSED LOCATIONS IN KITCHEN/SUPPORT AREA. CORNER GUARDS TO START AT FINISH FLOOR. ATTACH WITH SPECIALTY SCREWS AND ANCHORS INTO TILE. BULLNOSE COVE BASE WHERE TILE MEETS STAINLESS STEEL CORNER – SEE DETAIL 10/A6.1.
- CH — COAT HOOKS, WALL MOUNTED – SEE DETAIL 19/A6.1. (2 UNITS STACKED IN CREW ROOM)
- CP — CONCRETE EQMT PAD – SEE DETAIL 13/A6.1 AND STRUCTURAL
- CT — CERAMIC TILE – COORDINATE WITH MCDONALD'S AREA CONSTRUCTION MANAGER.
- X — A = KITCHEN WALL TILE – 1/2" CEMENT BOARD OVER 1/2" PLYWOOD BACKING – SEE FINISH PLAN AND SCHEDULE FOR ADDITIONAL INFORMATION AND EXCEPTIONS; B = CUSTOMER SERVICE WALL TILE – SEE DECOR PLANS FOR SPEC
- DO — DOWNSPOUT CONNECTED TO CANOPY SYSTEM. SEE ELEVATIONS. COORDINATE CONNECTION WITH CIVIL.
- DP — 48"Hx1/8" THICK DIAMOND PLATE WALL AND DOOR PROTECTION BY DIAMOND PLATE CONTRACTOR. COVER AREA SHOWN ON PLAN (DASHED LINES).
- DS — DROPPED SOFFIT ABOVE – SEE REFLECTED CEILING PLAN
- DT — 3/16" THICK DIAMOND PLATE THRESHOLD BY DIAMOND PLATE CONTRACTOR. DOOR 3: 12"x48" DOOR 3A/9A: 24"x60" DOOR 9 COOLER ENTRANCE: 12"x36"
- FB — FILL BOX
- XX — CO2 (EQUIPMENT SCHEDULE ITEM 49.00); BO – OPTIONAL BULK OIL (EQPM SCHEDULE ITEM 700.18) CONFIRM USE WITH MCDONALD'S AREA CONSTRUCTION MANAGER
- FL — FLOOR LINE – CHANGE IN MATERIAL – TO ALIGN WITH BACK OF FRONT COUNTER AND FACE OF WALL (KITCHEN SIDE) – SEE FINISH PLAN
- FW — LINE OF FROST WALL: SEE STRUCTURAL DRAWINGS FOR ADDITIONAL INFORMATION.
- LL — LEVEL LANDING @ EXT. DOOR W/ MAX. 2% RUNNING / CROSS SLOPE AWAY FROM BUILDING. * FROST FOOTING * PROPER MANEUVERING CLEARANCE * REFER TO STRUCTURAL / CIVIL PLANS; SIZE OF LANDING
- LW — LATE-NIGHT WINDOW (OPTIONAL) BY READYACCESS, MANUAL OPEN/SELF CLOSE. SEE SHEET A4.2 AND A6.0 FOR ADDITIONAL INFORMATION.
- MF — METAL FRAMING
- X — A = METAL STUD WALL CONSTRUCTION EXTENT OF THIS WALL – SEE DETAIL 2/A1.0; B = 5 1/2" METAL STUD EXTERIOR WALL CONSTRUCTION AT THIS LOCATION – SEE SECTIONS AND STRUCTURAL DRAWINGS FOR ADDITIONAL INFORMATION
- MS — MOP SINK – SEE DETAIL 8/A6.1 AND PLUMBING DRAWINGS. PROVIDE MOP HOLDER & 12"Lx12"W SHELF FOR CLEANING DETERGENT STORAGE
- PB — FILLED PIPE BOLLARD – SEE SITE PLAN AND DETAIL 3/A2.1, COLOR: SEE ELEVATIONS.
- RL — ROOF ACCESS LADDER W/HATCH ABOVE – SEE DETAIL 16/A6.1 AND STRUCTURAL FRAMING PLAN FOR LOCATING DIMENSIONS
- WS — INCOMING WATER SERVICE METER AREA

LEGEND

NEW WOOD FRAMED WALL — NEW METAL FRAMED WALL

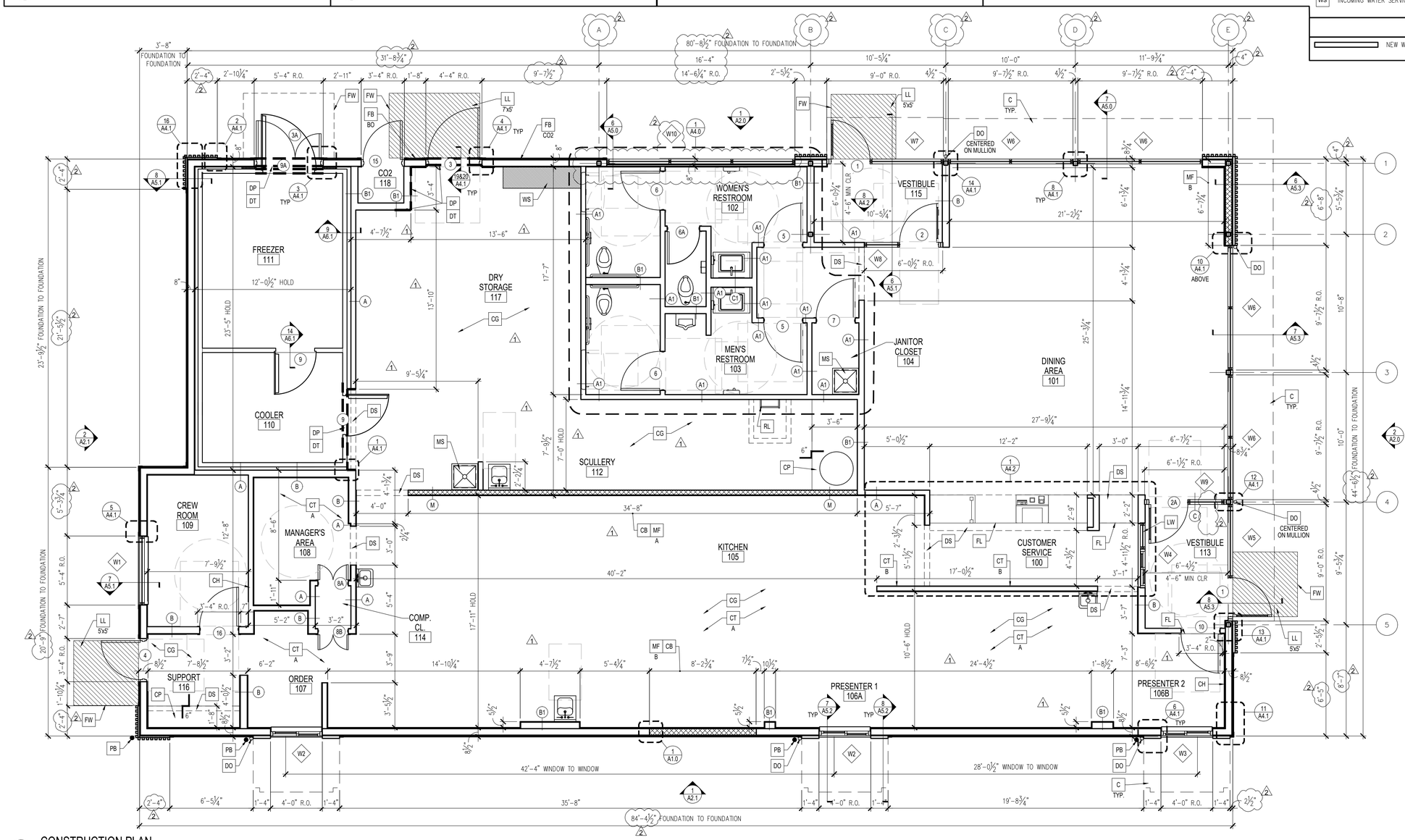

1/2" CEMENT BOARD HAS BEEN ADDED TO WALLS IN B.O.H. WHERE WT2 KITCHEN WALL TILE IS BEING INSTALLED (DIMENSIONS HAVE BEEN ADJUSTED FOR ADDITIONAL 1/2" CEMENT BOARD) SEE FINISH PLAN AND SCHEDULE FOR LOCATIONS, ADDITIONAL INFORMATION AND EXCEPTIONS

CONSTRUCTION PLAN

Scale: 1/4" = 1'-0"

LINGLE DESIGN GROUP INC
158 WEST MAIN STREET
LENA, IL 61048
815.369.9155
1764 BLAKE ST
DENVER, CO 8020
303.974.5873
WWW.LINGLEDESIGN.COM

© ALL DRAWINGS AND WRITTEN MATERIAL CONTAINED HEREIN ARE THE PROPERTY OF THE LINGLE DESIGN GROUP, INC. THEY MAY NOT BE REVISED, COPIED, REUSED, OR DISCLOSED IN ANY MANNER WITHOUT WRITTEN AUTHORIZATION FROM THE ARCHITECT.

CARL LINGLE LICENSED 7997 KANSAS ARCHITECT

04-08-26

STATE ID: 150404
PROJECT #: 26-028
NATIONAL #: 44655
DRAWN BY: CR
CHECKED BY: JK

DATE:
04/08/26 - PERMIT / BID SET

REVISIONS
1. 05/07/26 - QC COMMENTS/ADA UPDATE
2. 06/22/26 - CITY COMMENTS / DECOR

CLIENT
McDonald's USA, LLC

PROTOTYPE
BB20 4584 WW-HB
ISSUE DATE 02/25

ADDRESS
707 1/2 METROPOLITAN AVE
LEAVENWORTH, KS 66048

SHEET TITLE
FLOOR PLAN & DETAILS

SHEET NUMBER:
A1.0

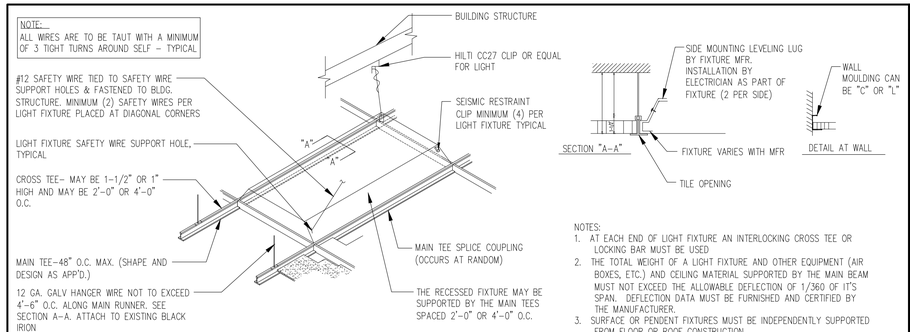

NOTES:
1. AT EACH END OF LIGHT FIXTURE AN INTERLOCKING CROSS TEE OR LOCKING BAR MUST BE USED
2. THE TOTAL WEIGHT OF A LIGHT FIXTURE AND OTHER EQUIPMENT (AIR BOXES, ETC.) AND CEILING MATERIAL SUPPORTED BY THE MAIN BEAM MUST NOT EXCEED THE ALLOWABLE DEFLECTION OF 1/360 OF IT'S SPAN. DEFLECTION DATA MUST BE FURNISHED AND CERTIFIED BY THE MANUFACTURER.
3. SURFACE OR PENDENT FIXTURES MUST BE INDEPENDENTLY SUPPORTED FROM FLOOR OR ROOF CONSTRUCTION.

1 CEILING GRID & LIGHT SUPPORT DETAIL

N.T.S.

LEGEND

- DIFFUSERS – REFER TO MECHANICAL DRAWINGS
- RETURN AIR GRILL OR EXHAUST FAN – REFER TO MECHANICAL DRAWINGS
- 2x4 RECESSED LIGHT FIXTURE – REFER TO ELECTRICAL DRAWINGS
- DIRECTIONAL EMERGENCY EXIT SIGNAGE – REFER TO ELECTRICAL DRAWINGS
- EXTERIOR EMERGENCY LIGHT W/ BATTERY BACKUP – REFER TO ELECTRICAL
- EXHAUST FAN WITH LIGHT – REFER TO ELECTRICAL AND MECHANICAL DRAWINGS
- DOWN CAN LIGHTING – REFER TO ELECTRICAL
- EMERGENCY DOWN CAN LIGHTING – REFER TO ELECTRICAL
- EXTERIOR SCONCE – REFER TO ELECTRICAL
- POWER & DATA THROUGH CEILING – REFER TO ELECTRICAL AND DECOR DRAWINGS

GENERAL NOTES

1. GENERAL CONTRACTOR SHALL COORDINATE HVAC DIFFUSER LOCATION WITH DECOR & MECHANICAL PLANS AND REPORT ANY DISCREPANCIES TO ARCHITECT.
2. REFERENCE MECHANICAL AND ELECTRICAL DRAWINGS FOR DIFFUSER AND LIGHTING INFORMATION.
3. SEE ELECTRICAL DRAWINGS FOR EMERGENCY LIGHTING LOCATIONS
4. PROVIDE USG V15 CEILING TILE RETENTION CLIPS IN ALL VESTIBULE AREAS
5. SEE 1/A1.2 FOR CEILING GRID & LIGHT SUPPORT DETAIL.
6. REFER TO DECOR DRAWINGS FOR FINAL FINISHES AND LOCATIONS.

KEY NOTES

TAG	DESCRIPTION
AC	AIR CURTAIN – ABOVE D/T WINDOW – SEE MECHANICAL AND ELECTRICAL PLANS
ACT AV	ACOUSTICAL CEILING TILE: VINYL FACED USG 24"X24" CLEAN ROOM CLIMA–PLUS, UNPERFORATED, SMOOTH TEXTURE, COLOR: WHITE, GRID: USG 15/16" DX/DXL COLOR: WHITE
C	ALUMINUM CANOPY WITH INTEGRAL GUTTER AND SCUPPER – SEE 5/A5.0 FOR NOTES – SEE ROOF PLAN FOR DIMENSIONS – SEE ELEVATION FOR COLOR.
DF	DECOR FINISH – REFER TO DECOR DRAWINGS FOR ADDITIONAL INFORMATION, LIGHTING AND FINISHES. SHOWN FOR REFERENCE AND COORDINATION PURPOSES.
DS	LINE OF DRAFT STOPPING – DRAFT STOPPING TO BE INSTALLED BETWEEN DINING / RESTROOMS AND KITCHEN. AREAS NOT TO EXCEED 3000 SF.
DM	DIGITAL MERCHANDISER – SEE ELEC PLANS
GYP	GYPSUM BOARD CEILING
MR	PAINTED GYPSUM CEILING TO MATCH RESTROOMS. – SEE DECOR PLANS
MT	CEILING MOUNTED MONITOR: A) VERIFY MONITOR LOCATIONS WITH McDONALD'S PROJECT MANAGER PRIOR TO INSTALLATION. B) SEE DETAIL 5/A4.4 FOR INSTALLATION METHOD
RL	ROOF LADDER OPENING
SC	INTEGRAL GUTTER SCUPPER

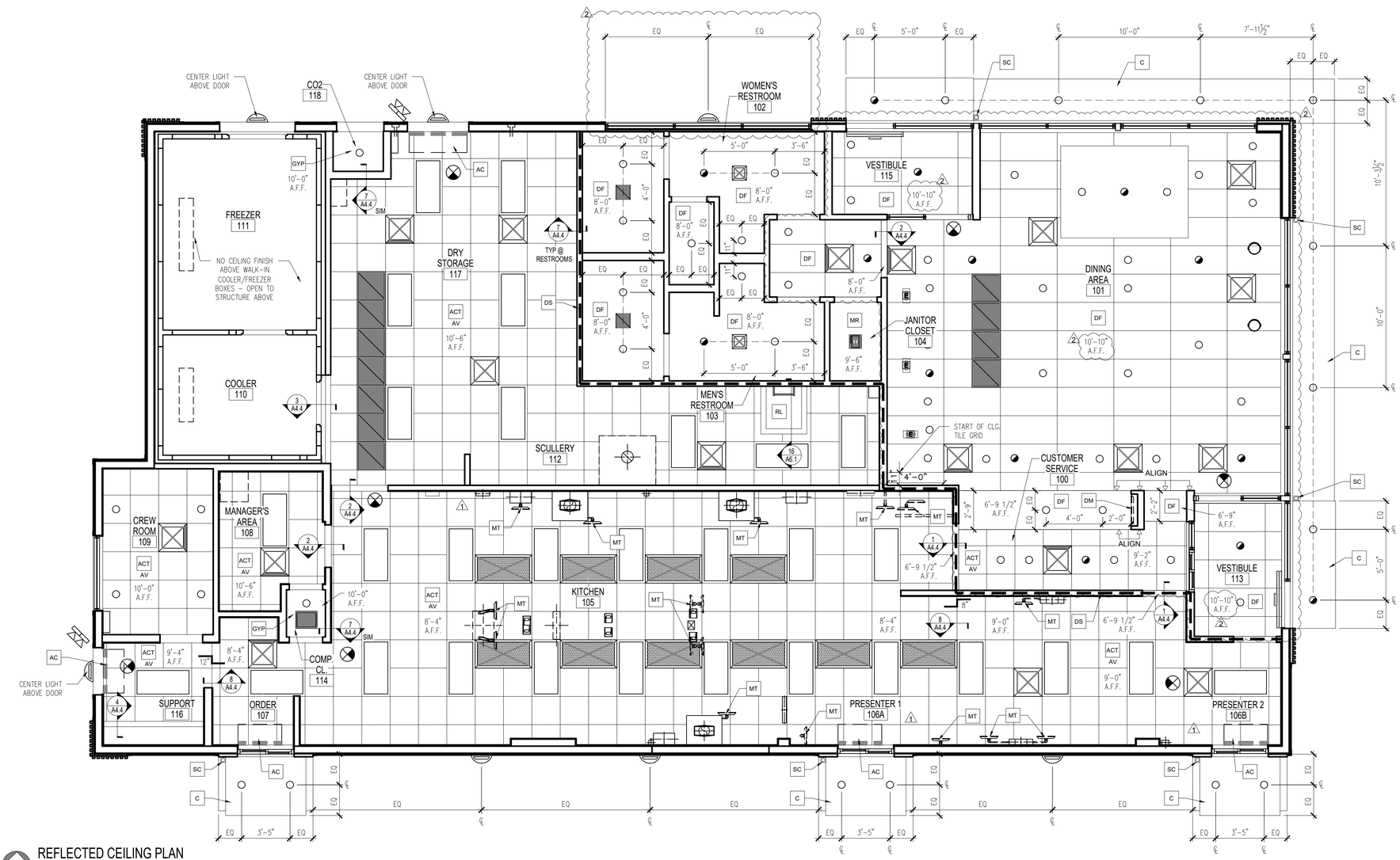

REFLECTED CEILING PLAN

Scale: 1/4" = 1'-0"

© ALL DRAWINGS AND WRITTEN MATERIAL CONTAINED HEREIN ARE THE PROPERTY OF THE LINGLE DESIGN GROUP, INC. THEY MAY NOT BE REVISED, COPIED, REUSED, OR DISCLOSED IN ANY MANNER WITHOUT WRITTEN AUTHORIZATION FROM THE ARCHITECT.

LINGLE DESIGN GROUP INC
158 WEST MAIN STREET
LENA, IL 61048
815.369.9155
1764 BLAKE ST
DENVER, CO 8020
303.974.5873
WWW.LINGLEDESIGN.COM

CARL LINGLE LICENSED 7997 KANSAS ARCHITECT
04–08–26

STATE ID: 150404
PROJECT #: 26-028
NATIONAL #: 44655
DRAWN BY: CR
CHECKED BY: JK

DATE:
04/08/26 - PERMIT / BID SET

REVISIONS
1. 05/07/26 - QC COMMENTS/ADA UPDATE
2. 06/22/26 - CITY COMMENTS / DECOR

CLIENT
McDonald's USA, LLC

PROTOTYPE
BB20 4584 WW-HB
ISSUE DATE 02/25

ADDRESS
707 1/2 METROPOLITAN AVE
LEAVENWORTH, KS 66048

SHEET TITLE
REFLECTED CEILING PLAN

SHEET NUMBER:
A1.2

GENERAL NOTES

1. SINGLE-PLY ROOFING SYSTEM WITH BASE FLASHING SHEET EXTENDING UP PARAPET AND TERMINATED UNDER COPING HOT WELDED TO SEALING STRIP SECURED TO WOOD BLOCKING.
2. INSTALLATION OF ROOFING SHALL BE IN ACCORDANCE WITH MANUFACTURER'S SPECIFICATIONS AND PER DETAIL 16 / A4.4
3. PROVIDE PREFABRICATED METAL CURBS. COORDINATE SIZE, LOCATION AND INSTALLATION REQUIREMENTS W/ M, E, P & S SHEETS. PROVIDE SHIMS TO LEVEL CURB AREAS WHERE ROOF DECK IS PITCHED.
4. FOR EXACT LOCATION OF EXHAUST FANS, HVAC UNITS, AND ROOF HATCH. REFER TO STRUCTURAL DRAWINGS.
5. CRICKETS MUST BE INSTALLED AT ALL ROOF CURBS & EQUIPMENT PLATFORMS BY GENERAL CONTRACTOR.

KEY NOTES

TAG	DESCRIPTION
C1	ALUMINUM CANOPY SYSTEM (COLOR: SEE ELEVATIONS)
C2	ALUMINUM CANOPY SYSTEM (COLOR: SEE ELEVATIONS)
CU	CONDENSING UNIT – SEE MECHANICAL
EA	ELECTRICAL ANTENNA GOOSENECK – SEE ELECTRICAL
EF X	EXHAUST FAN – SEE MECHANICAL TYPE: A = KITCHEN – WITH 2'-0" ADDITION LAYER OF ROOF MEMBRANE B = RESTROOM C = WAREWASHER
FL	WATER HEATER FLUE AND INTAKE
GN	GOOSENECK FOR JANITOR CLOSET EXHAUST FAN
HB	HOSE BIBB – SEE PLUMBING
K	KICKER – SEE STRUCTURAL
LE X#	ACCENT LIGHTING – SEE ELEVATIONS & ELECTRICAL LED LIGHT TYPE: L1 = SLIM LED (DOWN ONLY) L2 = UP FLOOD FIXTURE
MF X#	METAL FASCIA COLOR: C1 = SEE ELEVATIONS C2 = SEE ELEVATIONS
PP	PIPE PORTAL – SEE MECHANICAL
PV	PLUMBING VENT – SEE PLUMBING
RD	ROOF DRAIN WITH OVERFLOW DRAIN – SEE PLUMBING
RL	ROOF LADDER HATCH WITH LOCK – PROVIDE CURB AND CRICKET AS SHOWN
RTU	ROOFTOP UNIT – SEE MECHANICAL
S	McDONALD'S SIGNAGE BY OTHERS UNDER SEPARATE PERMIT (SEE ELEVATIONS)
SC	INTEGRAL GUTTER SCUPPER
UN	UNDERSCORE
WP	ROOF WALKWAY PAD

LEGEND

L.P.	LOW POINT
H.P.	HIGH POINT
⟶	DIRECTION OF DRAINAGE
AP ⟶	TRELLIS SYSTEM WITH ALUMINUM INFILL PANELS. SLOPE TO EDGE @ 1/4"PER FT.

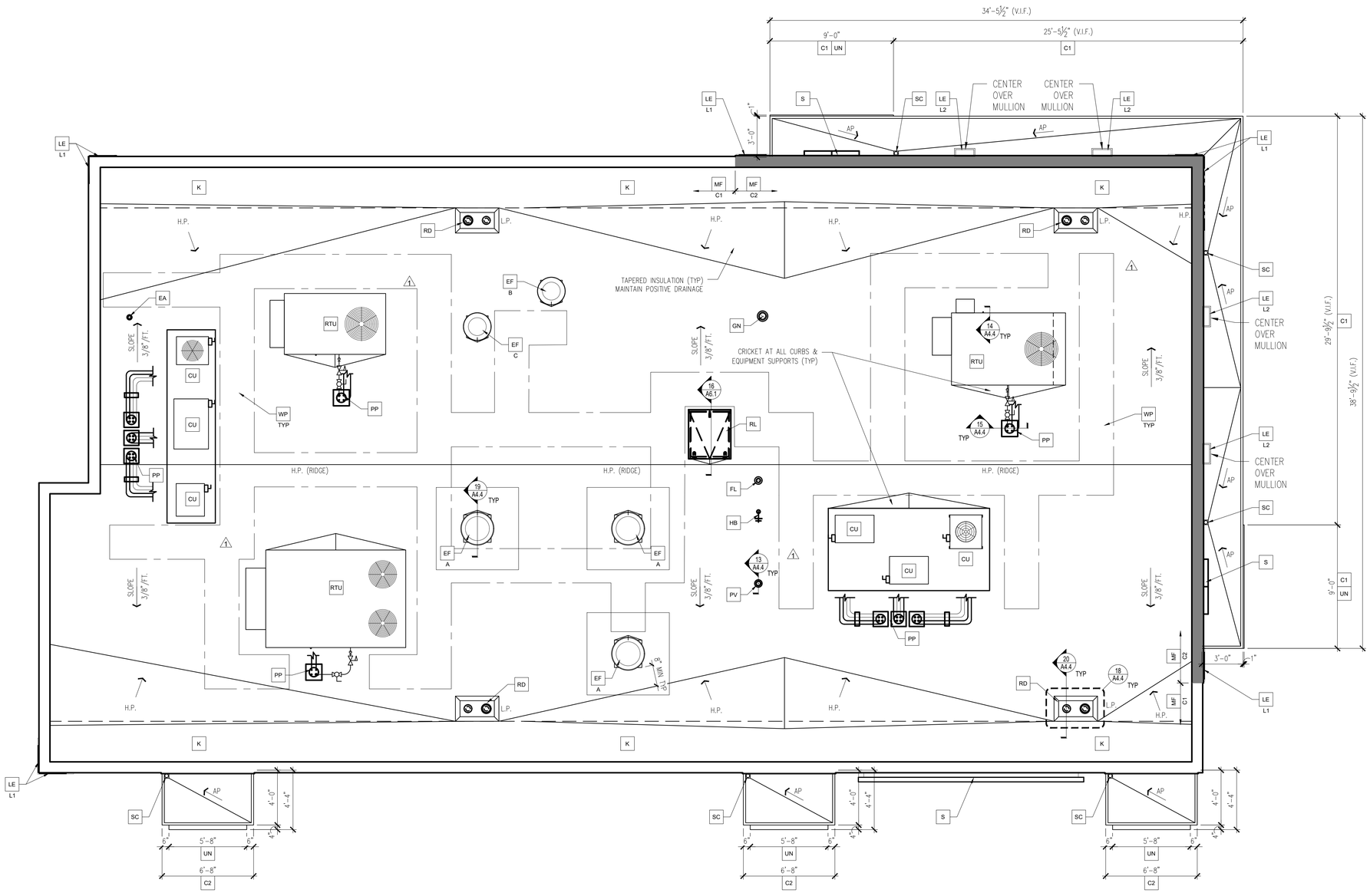

ROOF PLAN

Scale: 1/4" = 1'-0"

LINGLE DESIGN GROUP INC
158 WEST MAIN STREET
LENA, IL 61048
815.369.9155
1764 BLAKE ST
DENVER, CO 8020
303.974.5873
WWW.LINGLEDESIGN.COM

© ALL DRAWINGS AND WRITTEN MATERIAL CONTAINED HEREIN ARE THE PROPERTY OF THE LINGLE DESIGN GROUP, INC. THEY MAY NOT BE REVISED, COPIED, REUSED, OR DISCLOSED IN ANY MANNER WITHOUT WRITTEN AUTHORIZATION FROM THE ARCHITECT.

CARL LINGLE LICENSED 7997 KANSAS ARCHITECT

04-08-26

STATE ID: 150404
PROJECT #: 26-028
NATIONAL #: 44655
DRAWN BY: CR
CHECKED BY: JK

DATE:
04/08/26 - PERMIT / BID SET

REVISIONS
1. 05/07/26 - QC COMMENTS/ADA UPDATE
2. 06/22/26 - CITY COMMENTS / DECOR

CLIENT
McDonald's USA, LLC

PROTOTYPE
BB20 4584 WW-HB
ISSUE DATE 02/25

ADDRESS
707 1/2 METROPOLITAN AVE
LEAVENWORTH, KS 66048

SHEET TITLE
ROOF PLAN

SHEET NUMBER:
A1.3

FINISH SCHEDULE

TAG	DESCRIPTION	SPEC	COMMENTS
WALL FINISHES			
FRP	FIBERGLASS REINFORCED PANELS	PANOLAM, .075, COLOR: GRAY SMOOTH	1/2" PLYWOOD SUBSTRATE TYP (SEE GENERAL NOTES 4) CONTACT: KIMBERLY LAWSON 1-866-925-4377 OR KIMBERLY_LAWSON@PANOLAM.COM
WT2	KITCHEN WALL TILE	CROSSVILLE – COLOR BY NUMBERS (4"x12") STACKED BOND PATTERN COLOR: AFTERNOON SPRAY GROUT: MAPEI 27 SILVER – JOINT TO BE 1/16" MAX. * USE THIS TILE WHEN HIGH LRV IS REQUIRED, COORDINATE WITH THE McDONALD'S AREA CONSTRUCTION MANAGER.	1/2" CEMENT BOARD OVER 1/2" PLYWOOD SUBSTRATE TYP. 1/2" CEMENT BOARD OVER 1/2" CEMENT BOARD @ METAL STUDS
COR	CORIAN WALL FINISH AT LATE NIGHT WINDOW	1/2" DUPONT, CORIAN, DEEP TITANIUM	
FLOOR & BASE FINISHES			
B1	KITCHEN BASE TILE	CROSSVILLE – COVED QUARRY TILE (6"x6") COLOR: PURITAN GRAY GROUT: KERAPOXY IEG BLACK #10 BY MAPEI, CHEMICAL RESISTANT, WATER-CLEANABLE, TILE-SETTING EPOXY – 100% SOLIDS, INDUSTRIAL-GRADE MORTAR SETTING BED: MODIFIED-PORTLAND CEMENT THIN SET MORTAR (MEDIUM BED)	
B2	WALK-IN COOLER/FREEZER BASE	4" ALUMINUM COVED BASE	SUPPLIED BY K.E.S.
QT1	KITCHEN FLOOR TILE	CROSSVILLE – METROPOLITAN QUARRY BASICS ABRASIVE (6"x6") COLOR: PURITAN GRAY EXTRA ABRASIVE 57XA GROUT: KERAPOXY IEG BLACK #10 BY MAPEI, CHEMICAL RESISTANT, WATER-CLEANABLE, TILE-SETTING EPOXY – 100% SOLIDS, INDUSTRIAL-GRADE MORTAR SETTING BED: MODIFIED-PORTLAND CEMENT THIN SET MORTAR (MEDIUM BED)	
MISCELLANEOUS			
LM1	LAMINATE	SMOOTH BLACK PLASTIC LAMINATE	BY GC @ IDMB
LM3	LAMINATE	FORMICA COMPACT LAMINATE MATTE BLACK	BY GC @ FRONT COUNTER BASE BOARD (DINING SIDE)

ROOM FINISH SCHEDULE

MARK	ROOM NAME	FLOOR	WALLS	CEILING
100	CUSTOMER SERVICE	QT1, B1	REFER TO DECOR DRAWINGS	2'x2' ACOUST. (ACT AV)
101	DINING	TILE –REFER TO DECOR DRAWINGS	REFER TO DECOR DRAWINGS	REFER TO DECOR DRAWINGS
102	WOMEN'S TOILET	TILE –REFER TO DECOR DRAWINGS	TILE – REFER TO DECOR DRAWINGS	PAINTED GYP. BD. REFER TO DECOR DRAWINGS
103	MEN'S TOILET	TILE –REFER TO DECOR DRAWINGS	TILE – REFER TO DECOR DRAWINGS	PAINTED GYP. BD. REFER TO DECOR DRAWINGS
104	JANITOR CLOSET	TILE MATCH DINING	FRP (SEE GENERAL NOTE 5)	PAINTED GYP. BD. MATCH RESTROOMS
105	KITCHEN	QT1, B1	WT2	2'x2' ACOUST. (ACT AV)
106A	PRESENTER 1	QT1, B1	WT2	2'x2' ACOUST. (ACT AV)
106B	PRESENTER 2	QT1, B1	WT2	2'x2' ACOUST. (ACT AV)
107	ORDER	QT1, B1	WT2	2'x2' ACOUST. (ACT AV)
108	MANAGER'S AREA	QT1, B1	WT2	2'x2' ACOUST. (ACT AV)
109	CREW ROOM	QT1, B1	REFER TO DECOR DRAWINGS	2'x2' ACOUST. (ACT AV)
110	COOLER	QT1, B2	PRE-FAB METAL SKIN PANEL	PRE-FAB METAL SKIN PANEL
111	FREEZER	QT1, B2	PRE-FAB METAL SKIN PANEL	PRE-FAB METAL SKIN PANEL
112	SCULLERY	QT1, B1	FRP (SEE GENERAL NOTE 5)	2'x2' ACOUST. (ACT AV)
113	VESTIBULE	TILE –REFER TO DECOR DRAWINGS	REFER TO DECOR DRAWINGS	REFER TO DECOR DRAWINGS
114	COMPUTER CLOSET	QT1, B1	FRP	PAINTED GYP. BD.
115	VESTIBULE	TILE –REFER TO DECOR DRAWINGS	REFER TO DECOR DRAWINGS	REFER TO DECOR DRAWINGS
116	SUPPORT	QT1, B1	WT2	2'x2' ACOUST. (ACT AV)
117	DRY STORAGE	QT1, B1	FRP	2'x2' ACOUST. (ACT AV)
118	CO2	N/A	FRP	PAINTED GYP. BD.

* FOR REFERENCE ONLY, ALL FINISHES PER INTERIOR DESIGN DRAWINGS.

GENERAL NOTES

1. ALL FINISH SURFACES OF WALL AND CEILING MATERIALS SHALL BE CLASS B AND SHALL HAVE A FLAME SPREAD RATING OF 26 TO 75 AND A SMOKE DENSITY OF 450 MAX. (PER IBC TABLE 803.9).
2. DECORATIVE MATERIALS SHALL BE FLAME RETARDANT AND MEET THE CRITERIA OF NFPA 701.
3. DECORATIVE MATERIAL SHALL NOT CONCEAL EXITS, EXIT LIGHTS, ALARM STATIONS, HOSE CABINETS, AND EXTINGUISHER LOCATIONS.
4. WHEN BUILDING TYPE IS A NON-COMBUSTIBLE CATEGORY, ALL PLYWOOD SHALL BE FIRE RETARDANT TREATED.
5. WALL FINISH EXCEPTIONS

   QUARRY TILE WAINSCOT TO 6' A.F.F. OVER 1/2" CEMENT BD. OVER 1/2" PLYWOOD AT MOP SINKS.
6. PROVIDE CEMENT BOARD BACKER OR EQUIVALENT AT ALL TILE LOCATIONS.
7. PROVIDE VAPOR BARRIER BEHIND PLYWOOD AT WALLS AND BEHIND GYP. AT CEILING.
8. ALL DECOR ELEMENTS MANUFACTURED BY DECOR TO BE PURCHASED AND INSTALLED BY GC, UNO.
9. SEE TILE DETAILS SHEET A6.1.
10. REFER TO INTERIOR DESIGN DRAWINGS FOR ALL FINAL FINISHES AND LOCATIONS.

    * SEE CEILING PLANS FOR FINISHES, HEIGHTS & LAYOUTS.

    ** VWC ON EXTERIOR WALL ASSEMBLIES TO BE PERFORATED

KEY NOTES

1. NEW LINE OF FLOORING TRANSITION BETWEEN DINING TILE AND KITCHEN TILE TO ALIGN WITH BACK OF FRONT COUNTER AND WALL FACE (KITCHEN SIDE).
2. SEE SHEET A4.2 & A4.3 FOR ADDITIONAL FINISH INFORMATION
3. G.C. TO PROVIDE 4"x4"x5'-0" HIGH STAINLESS STEEL CORNER GUARDS AT ALL EXPOSED LOCATIONS IN KITCHEN/SUPPORT AREA. CORNER GUARDS TO START AT FINISH FLOOR. ATTACH WITH WOOD SCREWS INTO WOOD BLOCKING BULLNOSE COVE BASE WHERE TILE MEETS STAINLESS STEEL CORNER – SEE DETAIL 10/A6.1.
4. PEDIMAT. SEE DETAIL 20/A6.1
5. REFER TO DECOR DRAWINGS FOR ADDITIONAL INFORMATION AND FINISHES.
6. 48"Hx1/8" THICK DIAMOND PLATE WALL AND DOOR PROTECTION BY DIAMOND PLATE CONTRACTOR. COVER AREA SHOWN ON PLAN (DASHED LINES).

GENERAL TILE NOTES

1. REFERENCE: McDONALD'S PROJECT MANUAL – SECTION 093000
2. DINING ROOM FLOOR TILE:
   MAIN & ACCENT: USE ONLY APPROVED TILE SERIES AND COLORS BY CROSSVILLE AND EUROWEST. VERIFY COLOR AND PATTERN PER INTERIOR DESIGN DRAWINGS.
   A) MUST BE PER McDONALD'S USA, LLC: STANDARDS FOR INTERIOR FLOOR TILE AND APPROVED TILE LIST.
      MUST MEET THE FOLLOWING:
      STATIC COEFFICIENT OF FRICTION (PER ASTM F1667-96)
   B) LEVEL SURFACES: MINIMUM 0.50 DRY AND WET (McDONALD'S STANDARD)
      DYNAMIC COEFFICIENT OF FRICTION (PER ANSI A137.1 2012)
      LEVEL SURFACES: MINIMUM 0.5 DRY AND WET (McDONALD'S STANDARD)
3. TILE TRANSITION AND EDGE PROTECTION:
   A) TILE BASE (RESTROOM ONLY): SCHLUTER DILEX-AHK SERIES, BRUSHED STAINLESS STEEL.
   B) TILE EDGE PROTECTION (WALL TRANSITION): SCHLUTER-RONDEC-DB, SATIN ANODIZED ALUMINUM.
   C) TILE CORNER PROTECTION (OUTSIDE CORNER): SCHLUTER-RONDEC-AE, SATIN ANODIZED ALUMINUM.
   D) SEE INTERIOR DECOR DRAWINGS FOR ALL LOCATIONS.

   BEFORE FINAL INSPECTION, REMOVE PROTECTIVE COVERINGS AND PERFORM FINAL CLEANING.
4. TILE CLEANER: DETERDEK, BY FILA SURFACE CARE PRODUCTS – NO SUBSTITUTIONS ALLOWED CAN BE ORDERED BY EUROWEST, CROSSVILLE, OR DIRECT FROM MANUFACTURER: FILA/DETEREK POST INSTALLATION CLEANING REQUIRED ON ALL FLOOR TILE INSTALLTIONS PRIOR TO RESTAURANT TURN OVER.

   APPLY CLEANER PER MANUFACTURER'S WRITTEN INSTRUCTIONS.
   REFERENCE: McDONDALDS PROJECT MANUAL – SECTION 09300 TILING INTERIOR.
6. GROUT COLORS AND MANUFACTURER AS INDICATED IN FINISH SCHEDULE AND INTERIOR DESIGN DRAWINGS.

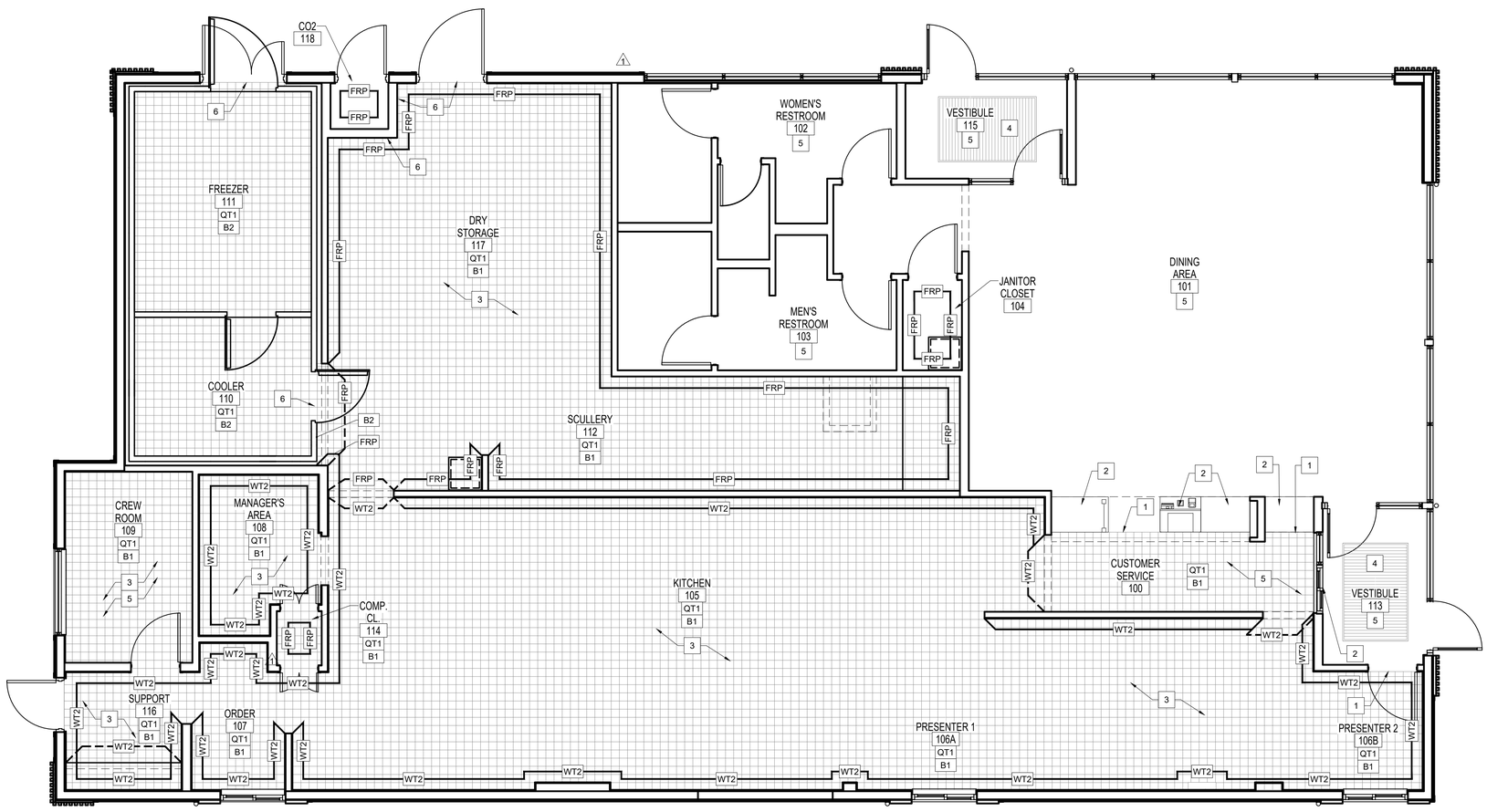

FINISH PLAN

Scale: 1/4" = 1'-0"

LINGLE DESIGN GROUP INC
158 WEST MAIN STREET
LENA, IL 61048
815.369.9155
1764 BLAKE ST
DENVER, CO 8020
303.974.5873
WWW.LINGLEDESIGN.COM

© ALL DRAWINGS AND WRITTEN MATERIAL CONTAINED HEREIN ARE THE PROPERTY OF THE LINGLE DESIGN GROUP, INC. THEY MAY NOT BE REVISED, COPIED, REUSED, OR DISCLOSED IN ANY MANNER WITHOUT WRITTEN AUTHORIZATION FROM THE ARCHITECT.

CARL LINGLE LICENSED 7997 KANSAS ARCHITECT

04-08-26

STATE ID: 150404
PROJECT #: 26-028
NATIONAL #: 44655
DRAWN BY: CR
CHECKED BY: JK

DATE:
04/08/26 - PERMIT / BID SET

REVISIONS
1 05/07/26 - QC COMMENTS/ADA UPDATE
2 06/22/26 - CITY COMMENTS / DECOR

CLIENT
McDonald's USA, LLC

PROTOTYPE
BB20 4584 WW-HB
ISSUE DATE 02/25

ADDRESS
707 1/2 METROPOLITAN AVE
LEAVENWORTH, KS 66048

SHEET TITLE
FINISH PLAN

SHEET NUMBER:
A1.4

1 NON DRIVE-THRU ELEVATION (NORTH)

Scale: 1/4"=1'-0"

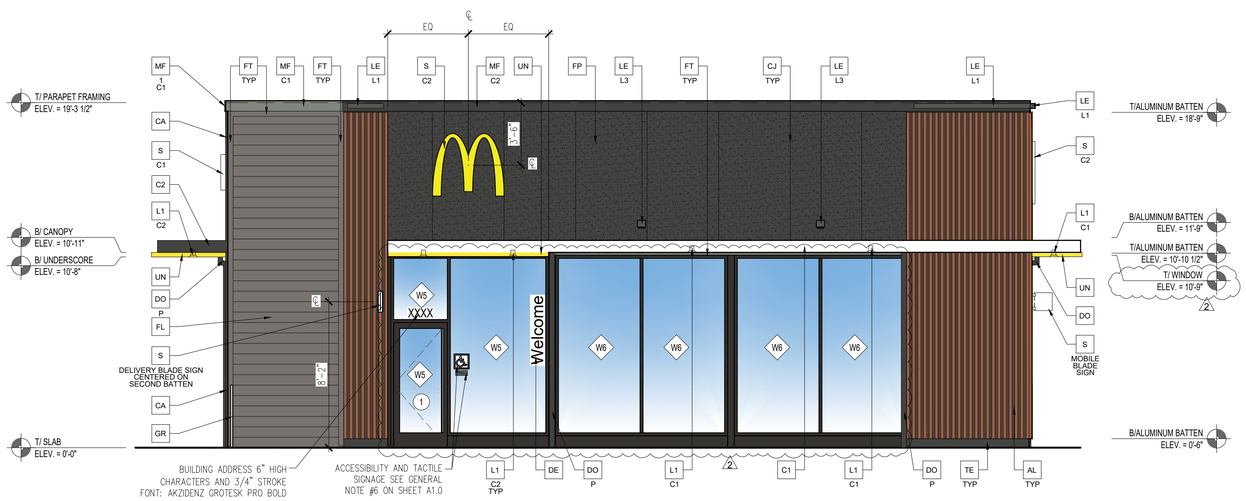

2 FRONT ELEVATION (EAST)

Scale: 1/4"=1'-0"

FENESTRATION CALCULATIONS		
FRONT ELEVATION		
TOTAL FACADE AREA		872 SQ. FT.
FENESTRATION AREA 1	312 SQ. FT.	
TOTAL FENESTRATION AREA	312 SQ. FT.	
		312 SQ. FT.
		872 SQ. FT.
% OF FENESTRATION		36%

FENESTRATION CALCULATIONS		
NON-DT ELEVATION		
TOTAL FACADE AREA		1,578 SQ. FT.
FENESTRATION AREA 1	312 SQ. FT.	
FENESTRATION AREA 2	156 SQ. FT.	
FENESTRATION AREA 3	32 SQ. FT.	
FENESTRATION AREA 4	24 SQ. FT.	
FENESTRATION AREA 5	39 SQ. FT.	
TOTAL FENESTRATION AREA	563 SQ. FT.	
		563 SQ. FT.
		1578 SQ. FT.
% OF FENESTRATION		36 %

GC TO PROVIDE SIGNAGE PACKAGE AND INSTALL SIGNS AT LOCATIONS AND POSITIONS INDICATED IN SIGNAGE PACKAGE OR AS REQUIRED BY LOCAL CODES. SIGNAGE PACKAGE SUPPLIED BY: FRANKE SUPPLY 1-800-423-5247, FAX: 1-877-538-6882, WWW.FRANKESUPPLY.COM, EMAIL: fs-frankesupply.us@franke.com

NOTE:
1. TRASH CORRAL INCLUDING DOORS, BOLLARDS ETC. TO MATCH MAIN BUILDING FINISHES AND COLORS.

RAL 7022 COLOR CHART (FOR REFERENCE)
(SEE ELEVATION KEY NOTES AP, C2, C3, MF-1-C2)
HEX CODE: #4C4A44
RGB CODE: RED 76 (30%), GREEN 74 (29%), BLUE 68 (27%)
CMYK CODE: CYAN 40%, MAGENTA 30%, YELLOW 40%, BLACK 80%

ELEVATION KEY NOTES:

COLOR SCHEME: 'STEEL' SCHEME

AL ALUMINUM BATTEN SYSTEM
SIZE: 2"x2" PROFILE
COLOR: WOOD GRAIN, BACKRAIL UNFINISHED, ENDCAP PAINTED TO MATCH SUBSTRATE: 1/2" EXTERIOR HIGH DENSITY OVERLAY (HDO) PLYWOOD, BB, GROUP 1, HDO BOTH FACES, APA TRADEMARKED.
COURSE GRIT SAND SURFACES PRIOR TO PRIMING. PRIME AND PAINT BOTH SIDES AND ALL EDGES PRIOR TO INSTALLATION.
SUBSTRATE COLOR: "IRON ORE" SW 7069 BY SHERWIN WILLIAMS

C1 ALUMINUM CANOPY SYSTEM W/FASCIA
COLOR: WHITE

C2 ALUMINUM CANOPY SYSTEM
COLOR: RAL 7022

CJ CONTROL JOINT
1 — TYPE: 1 = FIBER CEMENT PANELS

CT CT CABINET – SEE ELECTRICAL

D HOLLOW METAL DOOR
PAINT: GAUNTLET GRAY SW 7019 BY SHERWIN WILLIAMS

DE DECAL BY GRAPHICS SUPPLIER
SURFACE APPLIED, FIELD INSTALLED, PRE CUT, PRE SPACED.
SUPPLIERS:
VOMELA (865) 330-7337, ann.bowen@vomela.com
GFX INTERNATIONAL (847) 543-4600, mcdonaldsdecor@gfxi.com

DO DOWNSPOUT – 3" DOWNSPOUT BY CANOPY SYSTEM MANUFACTURER – COORDINATE WITH CIVIL TO TIE INTO STORM DRAIN – COLOR: RAL 7022
— TYPE/LOCATION:
P = AT PEDESTRIAN LOCATIONS, APPROVED CONNECTION OPTIONS ARE: DRAIN TO LANDSCAPE OR AREA DRAIN.
DT = AT DRIVE THRU LOCATIONS, DOWNSPOUTS CAN OUTLET DIRECTLY TO PAVEMENT IN DRIVE THRU LANE.

FB FILL BOX
— TYPE:
CO2 = BULK CO2 (EQPM SCHEDULE ITEM 49.00)
BO = BULK OIL (EQPM SCHEDULE ITEM 700.18)

FL FIBER CEMENT LAP SIDING: SMOOTH HARDI-BOARD PLANK BY JAMES HARDIE, 8-1/4" WIDTH, 7" EXPOSURE, HZ5
PAINT: "GAUNTLET GREY" SW7019 BY SHERWIN WILLIAMS

FP FIBER CEMENT PANELS: HARDIE ARCHITECTURAL PANELS BY JAMES HARDIE, 4'X10' PANELS, FINE SAND TEXTURE, EXPOSURE HZ5
VERTICAL "Y" TRIM AND LOW PROFILE HORIZONTAL "Z" TRIM AT BUTT JOINTS; 2 PIECE "J" TRIM AT FIELD EDGES AND MATERIAL TRANSITIONS
PAINT: "IRON ORE" SW 7069 BY SHERWIN WILLIAMS

FT FIBER CEMENT TRIM: HARDIE TRIM BOARDS 4/4 SMOOTH, 3 1/2" WIDTH, 3/4" THICK, HZ5
PAINT: "GAUNTLET GREY" SW7019 BY SHERWIN WILLIAMS

GM GAS METER – SEE MECHANICAL

KB KNOX BOX – SEE GENERAL NOTE 10 SHEET A1.0

L1 RECESSED LIGHT FIXTURE – SEE ELECTRICAL
— COLOR:
C1 = WHITE
C2 = GOLD

L2 RADIAL SCONCE LIGHT FIXTURE – SEE ELECTRICAL
COLOR: PLATINUM SILVER

LE ACCENT LIGHTING – SEE ELECTRICAL
— LED LIGHT:
L1 = SLIM LED (DOWN ONLY)
L2 = UP ONLY FLOOD FIXTURE

MF METAL FASCIA: PRE-FAB ANCHOR-TITE FASCIA
— COLOR:
C1 = WEATHERED ZINC
C2 = RAL 7022

PB PIPE BOLLARD – SEE SITE PLAN AND DETAIL 3/A2.1 USA 310-SD BASTION, COLOR: RAL 7022

RO ROOF DRAIN OVERFLOW PIPE – PAINT TO MATCH SURROUNDING MATERIAL

S McDONALD'S SIGNAGE BY OTHERS – UNDER SEPARATE PERMIT
— COLOR:
C1 = WEATHERED ZINC RACEWAY
C2 = RAL 7022 RACEWAY

ST CO2 STROBE/ALARM. SEE MECHANICAL DRAWINGS FOR SPECIFICATION.

TE TRU EXTERIOR 1"X6" TRIM, PAINTED ON SITE
COLOR: "IRON ORE" SW 7069 BY SHERWIN WILLIAMS

UN METAL UNDERSCORE
COLOR: GOLD

W# / **XX** EXTERIOR WINDOW ASSEMBLY – TEMPERED GLASS
COLOR: DARK BRONZE – SEE SHEET A5.0 FOR ASSEMBLY NOTE & A6.0 FOR WINDOW TYPES.

DRIVE-THRU WINDOWS BY READY ACCESS
MODEL: 600 SERIES, 36" SERVICE HEIGHT WITH TRANSOM, MANUAL OPEN; ELECTRONIC RELEASE
COLOR: DEEP BRONZE
SLIDE DIRECTION: RL = RIGHT TO LEFT
LR = LEFT TO RIGHT

LINGLE DESIGN GROUP INC
158 WEST MAIN STREET
LENA, IL 61048
815.369.9155
1764 BLAKE ST
DENVER, CO 8020
303.974.5873
WWW.LINGLEDESIGN.COM

© ALL DRAWINGS AND WRITTEN MATERIAL CONTAINED HEREIN ARE THE PROPERTY OF THE LINGLE DESIGN GROUP, INC. THEY MAY NOT BE REVISED, COPIED, REUSED, OR DISCLOSED IN ANY MANNER WITHOUT WRITTEN AUTHORIZATION FROM THE ARCHITECT.

CARL LINGLE LICENSED 7997 KANSAS ARCHITECT
04-08-26

STATE ID: 150404
PROJECT #: 26-028
NATIONAL #: 44655
DRAWN BY: CR
CHECKED BY: JK

DATE:
04/08/26 - PERMIT / BID SET

REVISIONS
1 05/07/26 - QC COMMENTS/ADA UPDATE
2 06/22/26 - CITY COMMENTS / DECOR

CLIENT
McDonald's USA, LLC

PROTOTYPE
BB20 4584 WW-HB
ISSUE DATE 02/25

ADDRESS
707 1/2 METROPOLITAN AVE
LEAVENWORTH, KS 66048

SHEET TITLE
EXTERIOR ELEVATIONS

SHEET NUMBER:
A2.0

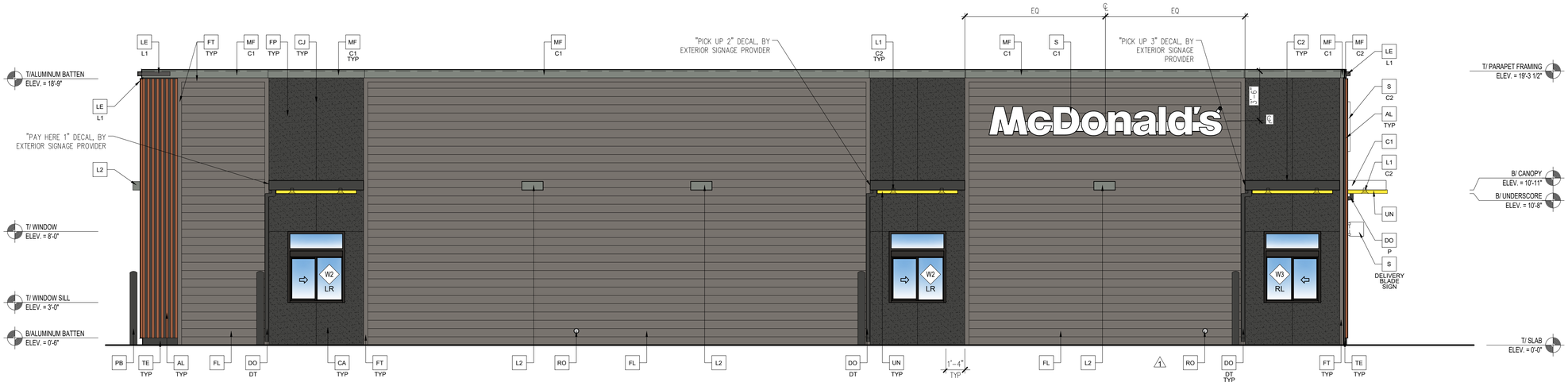

1 DRIVE-THRU ELEVATION (SOUTH) 2

Scale: 1/4"=1'-0"

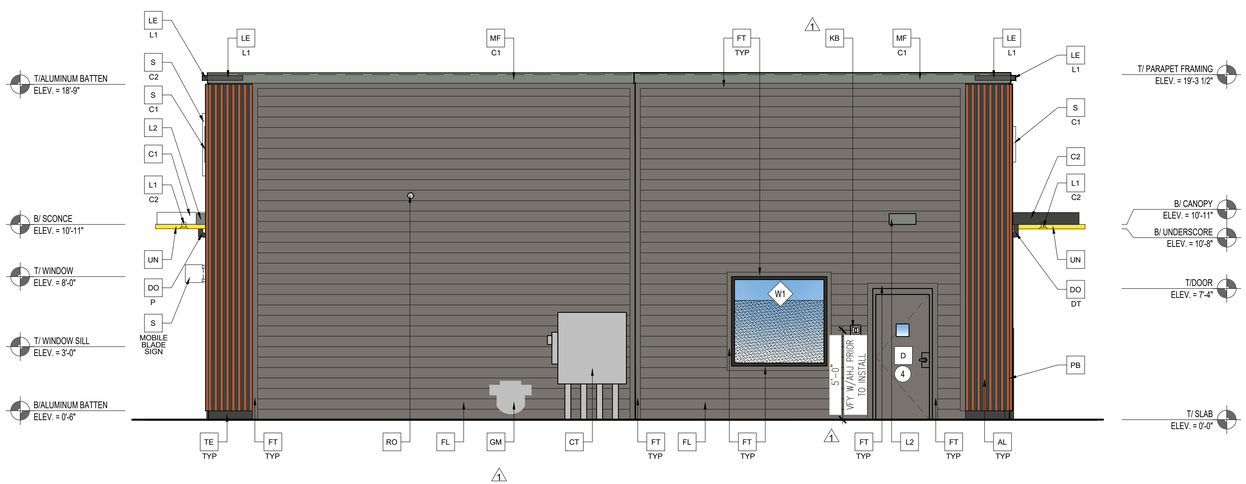

2 REAR ELEVATION (WEST) 2

Scale: 1/4"=1'-0"

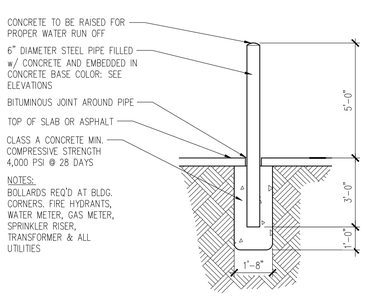

3 PIPE BOLLARD DETAIL

N.T.S.

GC TO PROVIDE SIGNAGE PACKAGE AND INSTALL SIGNS AT LOCATIONS AND POSITIONS INDICATED IN SIGNAGE PACKAGE OR AS REQUIRED BY LOCAL CODES. SIGNAGE PACKAGE SUPPLIED BY: FRANKE SUPPLY 1-800-423-5247, FAX: 1-877-538-6882, WWW.FRANKESUPPLY.COM, EMAIL: fs-frankesupply.us@franke.com

NOTE:
1. TRASH CORRAL INCLUDING DOORS, BOLLARDS ETC. TO MATCH MAIN BUILDING FINISHES AND COLORS.

RAL 7022 COLOR CHART (FOR REFERENCE)
(SEE ELEVATION KEY NOTES AP, C2, C3, MF-1-C2)
HEX CODE: #4C4A44
RGB CODE: RED 76 (30%), GREEN 74 (29%), BLUE 68 (27%)
CMYK CODE: CYAN 40%, MAGENTA 30%, YELLOW 40%, BLACK 80%

ELEVATION KEY NOTES:

COLOR SCHEME: 'STEEL' SCHEME

AL ALUMINUM BATTEN SYSTEM
SIZE: 2"x2" PROFILE
COLOR: WOOD GRAIN, BACKRAIL UNFINISHED, ENDCAP PAINTED TO MATCH SUBSTRATE: 1/2" EXTERIOR HIGH DENSITY OVERLAY (HDO) PLYWOOD, BB, GROUP 1, HDO BOTH FACES, APA TRADEMARKED.
COURSE GRIT SAND SURFACES PRIOR TO PRIMING. PRIME AND PAINT BOTH SIDES AND ALL EDGES PRIOR TO INSTALLATION.
SUBSTRATE COLOR: "IRON ORE" SW 7069 BY SHERWIN WILLIAMS

C1 ALUMINUM CANOPY SYSTEM W/FASCIA
COLOR: WHITE

C2 ALUMINUM CANOPY SYSTEM
COLOR: RAL 7022

CJ CONTROL JOINT
1 — TYPE: 1 = FIBER CEMENT PANELS

CT CT CABINET – SEE ELECTRICAL 1

D HOLLOW METAL DOOR
PAINT: GAUNTLET GRAY SW 7019 BY SHERWIN WILLIAMS

DE DECAL BY GRAPHICS SUPPLIER
SURFACE APPLIED, FIELD INSTALLED, PRE CUT, PRE SPACED.
SUPPLIERS:
VOMELA (865) 330-7337, ann.bowen@vomela.com
GFX INTERNATIONAL (847) 543-4600, mcdonaldsdecor@gfxi.com

DO DOWNSPOUT – 3" DOWNSPOUT BY CANOPY SYSTEM MANUFACTURER – COORDINATE WITH CIVIL TO TIE INTO STORM DRAIN – COLOR: RAL 7022
— TYPE/LOCATION:
P = AT PEDESTRIAN LOCATIONS, APPROVED CONNECTION OPTIONS ARE: DRAIN TO LANDSCAPE OR AREA DRAIN.
DT = AT DRIVE THRU LOCATIONS, DOWNSPOUTS CAN OUTLET DIRECTLY TO PAVEMENT IN DRIVE THRU LANE.

FB FILL BOX
— TYPE:
CO2 = BULK CO2 (EQPM SCHEDULE ITEM 49.00)
BO = BULK OIL (EQPM SCHEDULE ITEM 700.18)

FL FIBER CEMENT LAP SIDING: SMOOTH HARDI-BOARD PLANK BY JAMES HARDIE, 8-1/4" WIDTH, 7" EXPOSURE, HZ5
PAINT: "GAUNTLET GREY" SW7019 BY SHERWIN WILLIAMS

FP FIBER CEMENT PANELS: HARDIE ARCHITECTURAL PANELS BY JAMES HARDIE, 4'X10' PANELS, FINE SAND TEXTURE, EXPOSURE HZ5
VERTICAL "Y" TRIM AND LOW PROFILE HORIZONTAL "Z" TRIM AT BUTT JOINTS; 2 PIECE "J" TRIM AT FIELD EDGES AND MATERIAL TRANSITIONS
PAINT: "IRON ORE" SW 7069 BY SHERWIN WILLIAMS

FT FIBER CEMENT TRIM: HARDIE TRIM BOARDS 4/4 SMOOTH, 3 1/2" WIDTH, 3/4" THICK, HZ5
PAINT: "GAUNTLET GREY" SW7019 BY SHERWIN WILLIAMS 1

GM GAS METER – SEE MECHANICAL

KB KNOX BOX – SEE GENERAL NOTE 10 SHEET A1.0

L1 RECESSED LIGHT FIXTURE – SEE ELECTRICAL
— COLOR:
C1 = WHITE
C2 = GOLD

L2 RADIAL SCONCE LIGHT FIXTURE – SEE ELECTRICAL
COLOR: PLATINUM SILVER

LE ACCENT LIGHTING – SEE ELECTRICAL
— LED LIGHT:
L1 = SLIM LED (DOWN ONLY)
L2 = UP ONLY FLOOD FIXTURE

MF METAL FASCIA: PRE-FAB ANCHOR-TITE FASCIA
— COLOR:
C1 = WEATHERED ZINC
C2 = RAL 7022

PB PIPE BOLLARD – SEE SITE PLAN AND DETAIL 3/A2.1 USA 310-SD BASTION, COLOR: RAL 7022

RO ROOF DRAIN OVERFLOW PIPE – PAINT TO MATCH SURROUNDING MATERIAL

S McDONALD'S SIGNAGE BY OTHERS – UNDER SEPARATE PERMIT
— COLOR:
C1 = WEATHERED ZINC RACEWAY
C2 = RAL 7022 RACEWAY

ST CO2 STROBE/ALARM. SEE MECHANICAL DRAWINGS FOR SPECIFICATION.

TE TRU EXTERIOR 1"X6" TRIM, PAINTED ON SITE
COLOR: "IRON ORE" SW 7069 BY SHERWIN WILLIAMS

UN METAL UNDERSCORE
COLOR: GOLD

W#/XX EXTERIOR WINDOW ASSEMBLY – TEMPERED GLASS
COLOR: DARK BRONZE – SEE SHEET A5.0 FOR ASSEMBLY NOTE & A6.0 FOR WINDOW TYPES.
DRIVE-THRU WINDOWS BY READY ACCESS
MODEL: 600 SERIES, 36" SERVICE HEIGHT WITH TRANSOM, MANUAL OPEN; ELECTRONIC RELEASE
COLOR: DEEP BRONZE
SLIDE DIRECTION: RL = RIGHT TO LEFT
LR = LEFT TO RIGHT

LINGLE DESIGN GROUP INC
158 WEST MAIN STREET
LENA, IL 61048
815.369.9155
1764 BLAKE ST
DENVER, CO 8020
303.974.5873
WWW.LINGLEDESIGN.COM

© ALL DRAWINGS AND WRITTEN MATERIAL CONTAINED HEREIN ARE THE PROPERTY OF THE LINGLE DESIGN GROUP, INC. THEY MAY NOT BE REVISED, COPIED, REUSED, OR DISCLOSED IN ANY MANNER WITHOUT WRITTEN AUTHORIZATION FROM THE ARCHITECT.

CARL LINGLE LICENSED 7997 KANSAS ARCHITECT

04-08-26

STATE ID: 150404
PROJECT #: 26-028
NATIONAL #: 44655
DRAWN BY: CR
CHECKED BY: JK

DATE:
04/08/26 - PERMIT / BID SET

REVISIONS
1 05/07/26 - QC COMMENTS/ADA UPDATE
2 06/22/26 - CITY COMMENTS / DECOR

CLIENT
McDonald's USA, LLC

PROTOTYPE
BB20 4584 WW-HB
ISSUE DATE 02/25

ADDRESS
707 1/2 METROPOLITAN AVE
LEAVENWORTH, KS 66048

SHEET TITLE
EXTERIOR ELEVATIONS

SHEET NUMBER:
A2.1

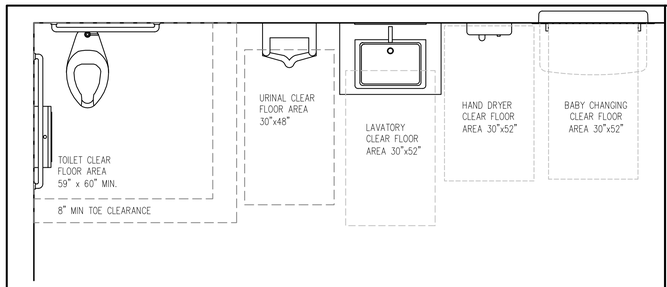

5 REQUIRED ADA RESTROOM CLEAR FLOOR SPACES

1/2" =1'-0"

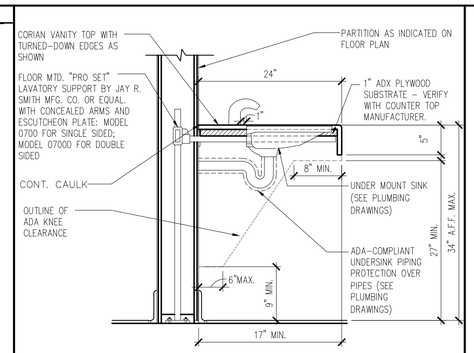

4 LAVATORY SECTION

1" =1'-0"

1. UNLESS OTHERWISE NOTED, ALL ITEMS SHALL BE FURNISHED AND INSTALLED BY THE G.C.
2. GRAB BARS TO BE 1 1/2" IN DIAMETER AND INSTALLED NO MORE THAN 1 1/2" FROM WALL TO EDGE OF BAR. GRAB BARS MUST BE ABLE TO WITHSTAND A 250 LBS. FORCE AND HAVE NO SHARP OR ABRASIVE EDGES.
3. CLEAR FLOOR SPACE OF 30X48 SHALL BE MAINTAINED AT ALL CONTROL AND OPERATING MECHANISMS. (E.G., PAPER TOWEL DISPENSER). SEE ELEVS. OR ACCESSORY SCHED. FOR ACCESSIBLE MOUNTING HEIGHTS.

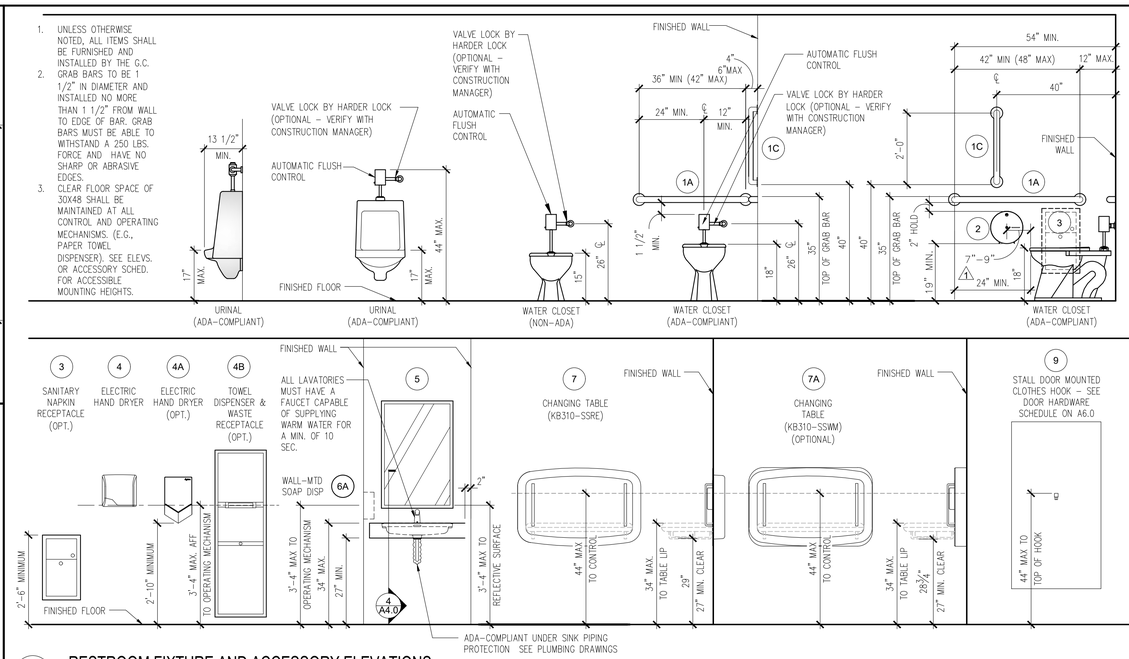

3 RESTROOM FIXTURE AND ACCESSORY ELEVATIONS

1/2" =1'-0"

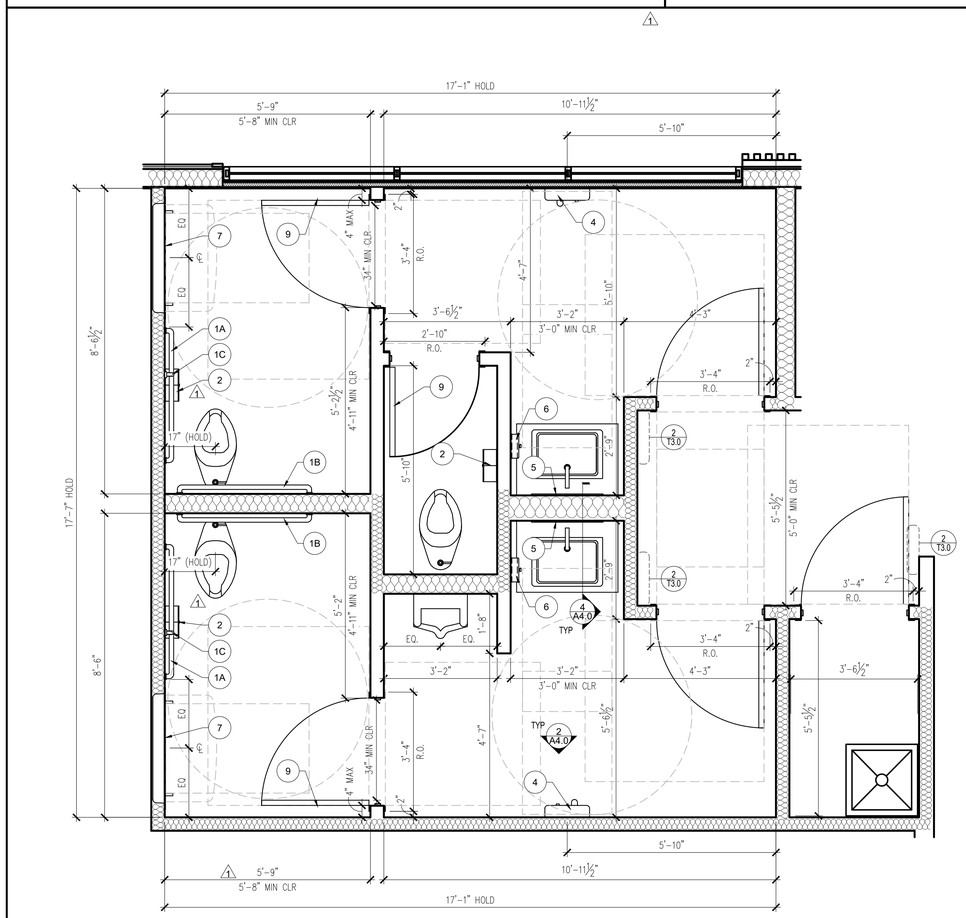

NOTES
1. ALL DIMENSIONS SHOWN ARE TAKEN FROM CEMENT BOARD
2. SEE SHEET A1.0 FOR PARTITION TYPES
3. SEE SHEET A6.0 FOR DOOR SCHEDULES.
4. SEE SHEET DECOR DRAWINGS FOR FINISHES.
5. DASHED LINES @ DOORS, RESTROOMS, & FIXTURES REPRESENT CLEAR FLOOR MANEUVERING CLEARANCES AS REQUIRED BY THE ACCESSIBILITY CODE. CLEARANCES MUST BE MAINTAINED WITHOUT EXCEPTION. IF CONDITIONS PREVENT ANY CLEAR FLOOR SPACE FROM BEING MAINTAINED, CONTACT THE ARCHITECT FOR RESOLUTION.
6. SEE DOOR CLEARANCE DETAILS ON SHEET C2.0 FOR REQUIRED DOOR CLEARANCE.
7. SEE 5/A4.0 FOR FIXTURE CLEARANCES.
8. SEE 3/A4.0 FOR FIXTURE MOUNTING HEIGHTS

(#) = RESTROOM ACCESSORY - SEE SCHEDULE

1 ENLARGED RESTROOM PLAN

1/2" =1'-0"

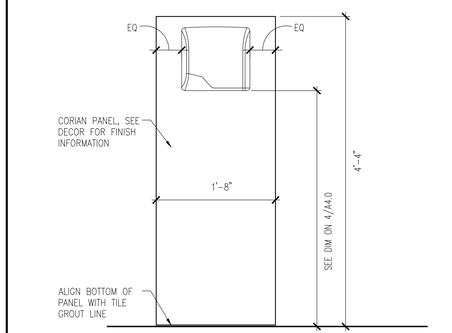

2 ELEVATION @ HAND DRYER

1" =1'-0"

RESTROOM ACCESSORY SCHEDULE

	ITEM (SEE NOTE 2)	MFR MODEL #	SUPPLIER	BACKUP SUPPORT (SEE NOTE 3)
1A	GRAB BAR 42" OR 48"	BOBRICK B-6806X42 OR B-6806X48	HUGHES SUPPLY (866) 310-3576 MCDCOORD@HAJOCA.COM	(1) 2x6 4'-0" LONG CENTER MOUNTED
1B	GRAB BAR 36" OR 42"	BOBRICK B-6806X36 OR B-6806X42		
1C	GRAB BAR 24"	BOBRICK B-6806X24		
2	TOILET TISSUE DISPENSER, JUMBO SURFACE MOUNTED	BRADLEY 5424	HUGHES SUPPLY (866) 310-3576 MCDCOORD@HAJOCA.COM	
3	SANITARY NAPKIN RECEPTACLE, RECESSED (OPTIONAL)	BOBRICK B-353	HUGHES SUPPLY (866) 310-3576 MCDCOORD@HAJOCA.COM	FRAME WALL OPENING PER MANUFACTURER'S RECOMMENDATIONS
4	HAND DRYER, ENERGY EFFICIENT MODEL, ADA, ALUMINUM BRUSHED	WORLD DRYER Q-973A2 VERDEDRI	HUGHES SUPPLY (866) 310-3576 MCDCOORD@HAJOCA.COM	FRAME WALL OPENING PER MANUFACTURER'S RECOMMENDATIONS
4A	HAND DRYER, ENERGY EFFICIENT MODEL, ADA, SPRAYED NICKEL	DYSON AIRBLADE V	HUGHES SUPPLY (866) 310-3576 MCDCOORD@HAJOCA.COM	
4B	TOWEL DISPENSER & WASTE RECEPTACLE, COMBINATION, RECESSED	BOBRICK B-3974	HUGHES SUPPLY (866) 310-3576 MCDCOORD@HAJOCA.COM	FRAME WALL OPENING PER MANUFACTURER'S RECOMMENDATIONS
5	MIRROR, CHANNEL FRAME	BOBRICK B-165 24X36	HUGHES SUPPLY (866) 310-3576 MCDCOORD@HAJOCA.COM	
6	SOAP DISPENSER, WALL-MOUNTED	BOBRICK B-2112	HUGHES SUPPLY (866) 310-3576 MCDCOORD@HAJOCA.COM	
6A	SOAP DISPENSER, COUNTER MOUNTED, 6" SPOUT	BOBRICK B-82216	HUGHES SUPPLY (866) 310-3576 MCDCOORD@HAJOCA.COM	
7	BABY CHANGING TABLE, HORIZONTAL, RECESSED, ADA COMPLIANT, STAINLESS STEEL	KOALA KARE KB310-SSRE	HUGHES SUPPLY (866) 310-3576 MCDCOORD@HAJOCA.COM	INSTALL PER MANUFACTURER'S RECOMMENDATIONS
7A	BABY CHANGING TABLE, HORIZONTAL, SURFACE MOUNT, ADA COMPLIANT, STAINLESS STEEL	KOALA KARE KB310-SSWM	HUGHES SUPPLY (866) 310-3576 MCDCOORD@HAJOCA.COM	INSTALL PER MANUFACTURER'S RECOMMENDATIONS
8	DIAPER CONTAINER (OPTIONAL)	-	BY OWNER	
9	CLOTHES HOOK	BRADLEY 917	HUGHES SUPPLY (866) 310-3576 MCDCOORD@HAJOCA.COM	

NOTES
1) SEE 3/A4.0 FOR ACCESSORY MOUNTING HEIGHTS
2) SELECT ONE ITEM FROM ITEM GROUPS 4, 6, & 7 VERIFY WITH AREA CONSTRUCTION MANAGER.
3) CUT BACK-UP SUPPORTS BETWEEN STUDS SO FACE OF SUPPORT IS FLUSH W/WALL STUD

LINGLE DESIGN GROUP INC
158 WEST MAIN STREET
LENA, IL 61048
815.369.9155
1764 BLAKE ST
DENVER, CO 8020
303.974.5873
WWW.LINGLEDESIGN.COM

© ALL DRAWINGS AND WRITTEN MATERIAL CONTAINED HEREIN ARE THE PROPERTY OF THE LINGLE DESIGN GROUP, INC. THEY MAY NOT BE REVISED, COPIED, REUSED, OR DISCLOSED IN ANY MANNER WITHOUT WRITTEN AUTHORIZATION FROM THE ARCHITECT.

CARL LINGLE LICENSED 7997 KANSAS ARCHITECT

04-08-26

STATE ID: 150404
PROJECT #: 26-028
NATIONAL #: 44655
DRAWN BY: CR
CHECKED BY: JK

DATE:
04/08/26 - PERMIT / BID SET

REVISIONS
1 05/07/26 - QC COMMENTS/ADA UPDATE
2 06/22/26 - CITY COMMENTS / DECOR

CLIENT
McDonald's USA, LLC

PROTOTYPE
BB20 4584 WW-HB
ISSUE DATE 02/25

ADDRESS
707 1/2 METROPOLITAN AVE
LEAVENWORTH, KS 66048

SHEET TITLE
ENLARGED RESTROOM PLAN & DETAILS

SHEET NUMBER:
A4.0

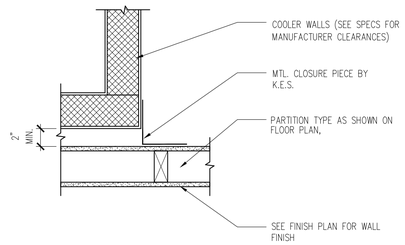

1 CLOSURE DETAIL @ COOLER

1 1/2" = 1'-0"

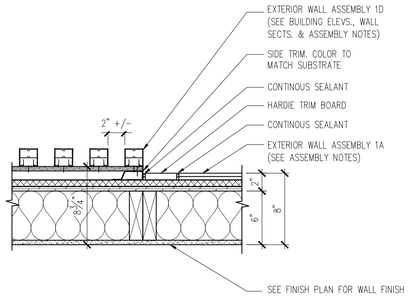

2 BATTEN TO HARDIE PLANK TRANSITION

1 1/2" = 1'-0"

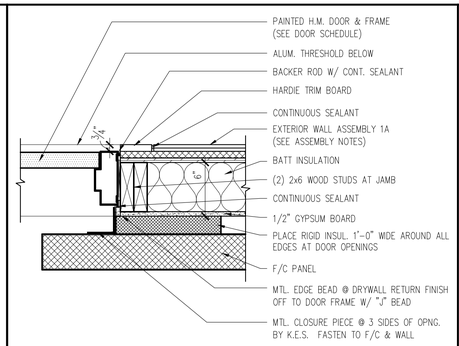

3 DOOR JAMB @ F/C DOOR

1 1/2" = 1'-0"

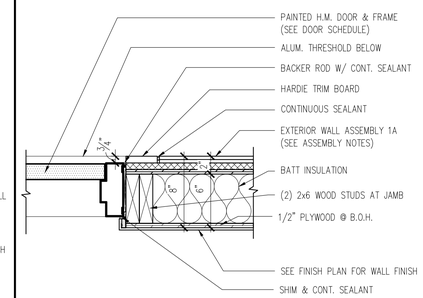

4 EXTERIOR DOOR JAMB DETAIL

1 1/2" = 1'-0"

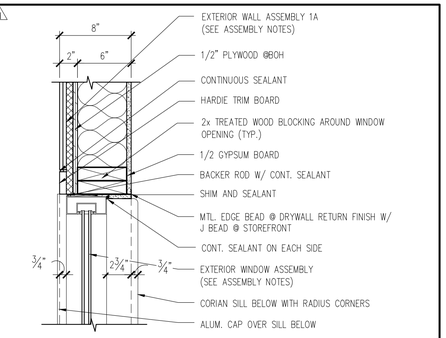

5 CREW ROOM WINDOW JAMB DETAIL

1 1/2" = 1'-0"

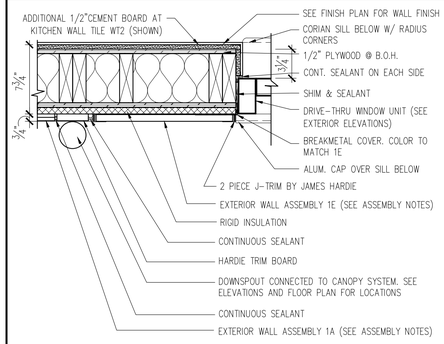

6 DRIVE-THRU WINDOW JAMB DETAIL

1 1/2" = 1'-0"

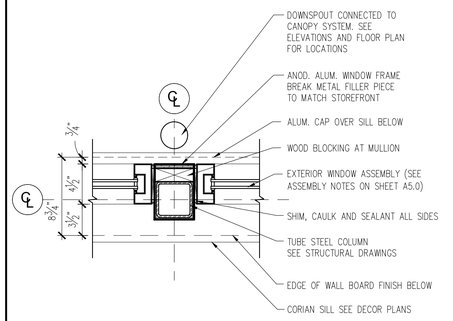

8 DETAIL @ COLUMN

1 1/2" = 1'-0"

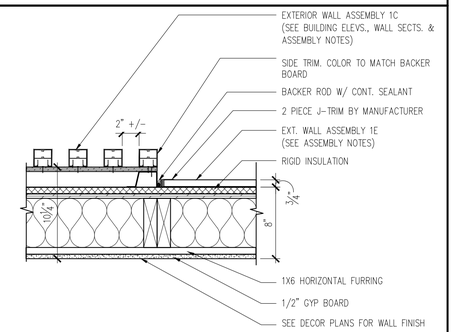

10 BATTEN TO HARDIE PANEL TRANSITION

1 1/2" = 1'-0"

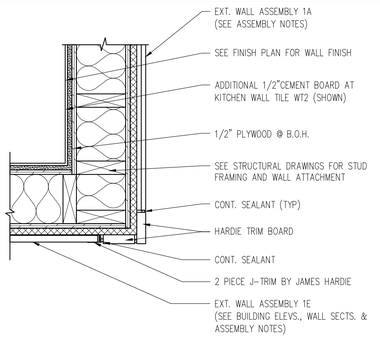

11 CORNER DETAIL @ DT SURROUND

1 1/2" = 1'-0"

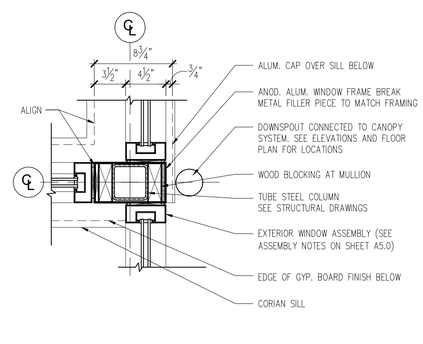

12 DETAIL @ COLUMN

1 1/2" = 1'-0"

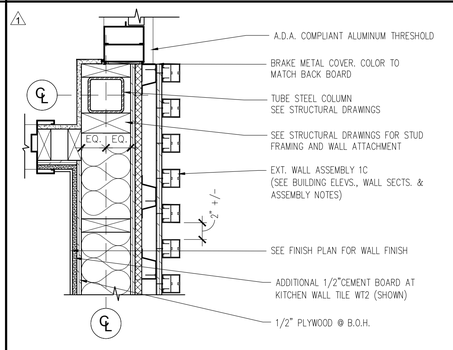

13 DETAIL @ COLUMN

1 1/2" = 1'-0"

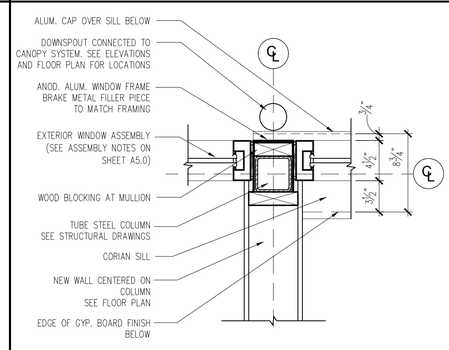

14 DETAIL AT COLUMN

1 1/2" = 1'-0"

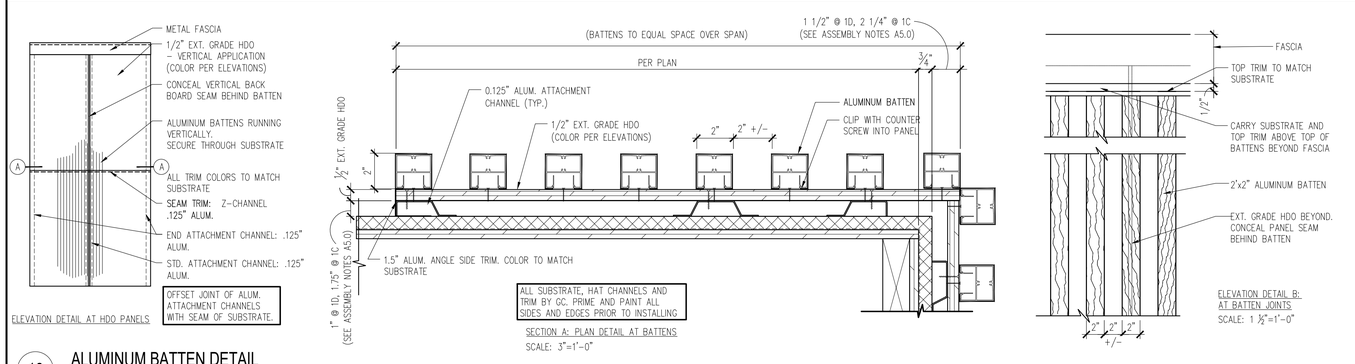

16 ALUMINUM BATTEN DETAIL

1/4" = 1'-0"

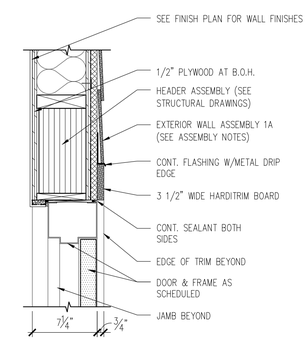

19 SECTION @ DOOR HEAD

1 1/2" = 1'-0"

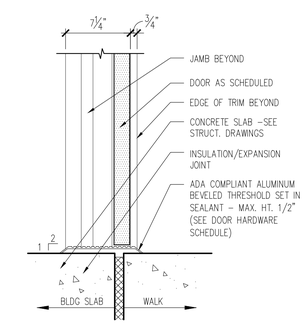

20 SECTION @ DOOR SILL

1 1/2" = 1'-0"

LINGLE DESIGN GROUP INC
158 WEST MAIN STREET
LENA, IL 61048
815.369.9155
1764 BLAKE ST
DENVER, CO 8020
303.974.5873
WWW.LINGLEDESIGN.COM

© ALL DRAWINGS AND WRITTEN MATERIAL CONTAINED HEREIN ARE THE PROPERTY OF THE LINGLE DESIGN GROUP, INC. THEY MAY NOT BE REVISED, COPIED, REUSED, OR DISCLOSED IN ANY MANNER WITHOUT WRITTEN AUTHORIZATION FROM THE ARCHITECT.

CARL LINGLE LICENSED 7997 KANSAS ARCHITECT

04-08-26

STATE ID: 150404

PROJECT #: 26-028

NATIONAL #: 44655

DRAWN BY: CR

CHECKED BY: JK

DATE:
04/08/26 - PERMIT / BID SET

REVISIONS
1 05/07/26 - QC COMMENTS/ADA UPDATE
2 06/22/26 - CITY COMMENTS / DECOR

CLIENT

McDonald's USA, LLC

PROTOTYPE
BB20 4584 WW-HB
ISSUE DATE 02/25

ADDRESS
707 1/2 METROPOLITAN AVE
LEAVENWORTH, KS 66048

SHEET TITLE
DETAILS

SHEET NUMBER:
A4.1

GENERAL NOTES

- ALL WALL LAMINATE PANELING MANUFACTURED BY DECOR, PURCHASE AND INSTALL BY G.C. U.N.O.
- ALL ELEMENTS "BY CP" TO BE ORDERED BY CENTRAL PURCHASING AND INSTALLED BY GC, UNO.
- KIOSK SIGNAGE BY G.C. – ORDER FROM AMANDA GUSTAFSON W/ ALTRUA (agustufson@altrua.com) "CREDIT ONLY" & "CASH / CREDIT" KIOSK SIGNAGE

LEGEND

XX — TYPICAL FINISHES – SEE SHEET A1.4 FOR FINISH PLAN AND SCHEDULE.

XX — DECOR FINISHES – SEE DECOR PLANS FOR ADDITIONAL FINISHES AND NOTES.

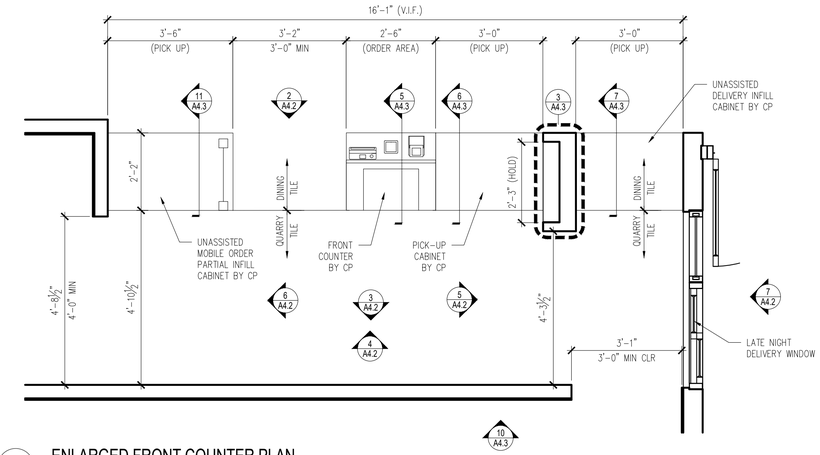

1 ENLARGED FRONT COUNTER PLAN

1/2" =1'-0"

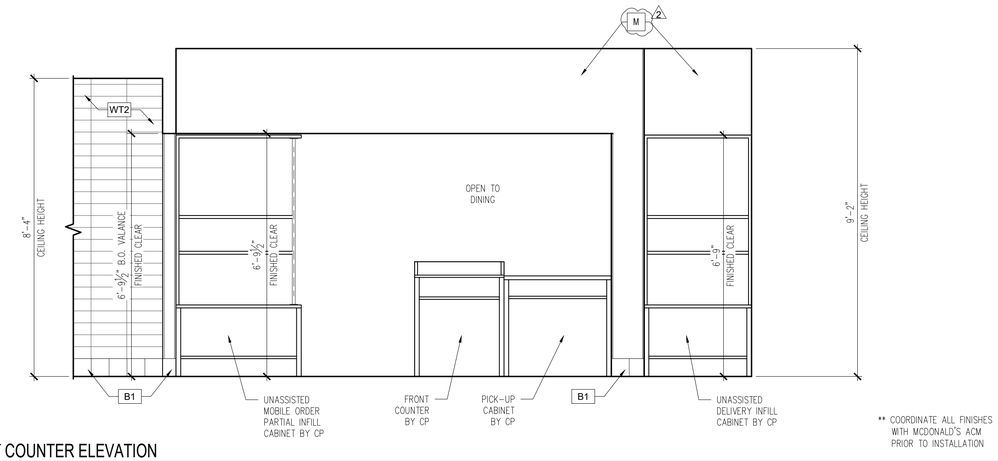

** COORDINATE ALL FINISHES WITH MCDONALD'S ACM PRIOR TO INSTALLATION

4 FRONT COUNTER ELEVATION

1/2" =1'-0"

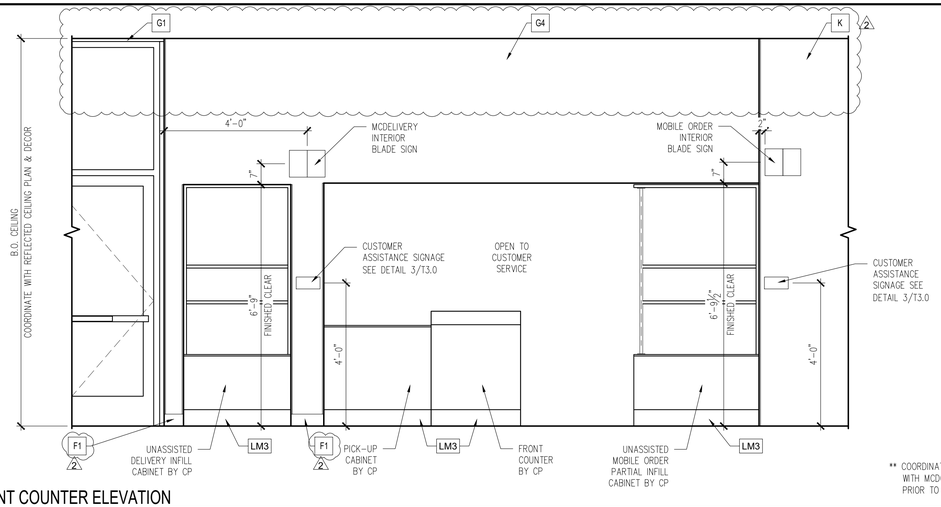

** COORDINATE ALL FINISHES WITH MCDONALD'S ACM PRIOR TO INSTALLATION

2 FRONT COUNTER ELEVATION

1/2" =1'-0"

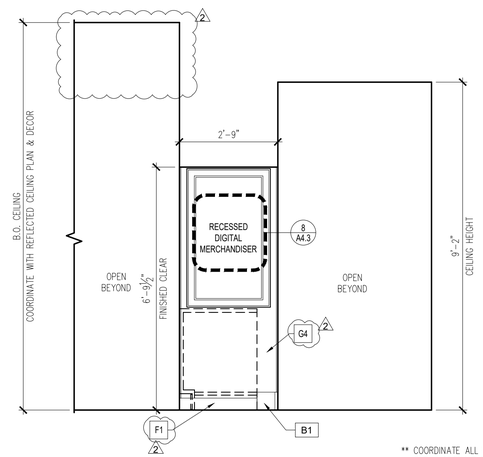

** COORDINATE ALL FINISHES WITH MCDONALD'S ACM PRIOR TO INSTALLATION

5 ELEVATION @ FRONT COUNTER

1/2" =1'-0"

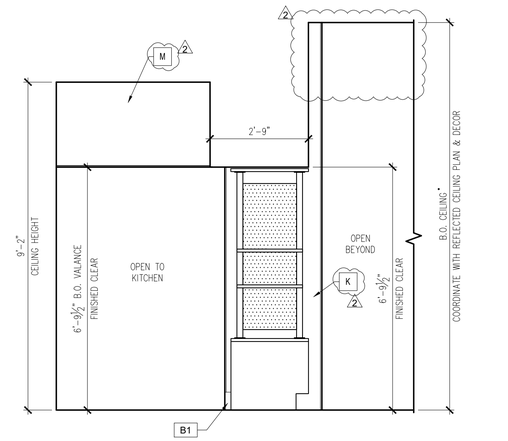

** COORDINATE ALL FINISHES WITH MCDONALD'S ACM PRIOR TO INSTALLATION

6 ELEVATION @ FRONT COUNTER

1/2" =1'-0"

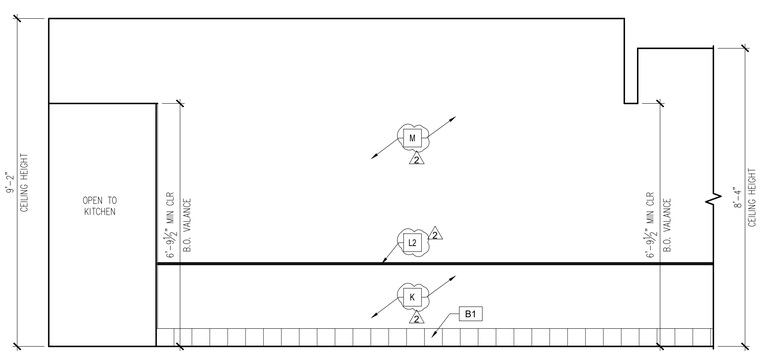

** COORDINATE ALL FINISHES WITH MCDONALD'S ACM PRIOR TO INSTALLATION

3 ESE WALL ELEVATION

1/2" =1'-0"

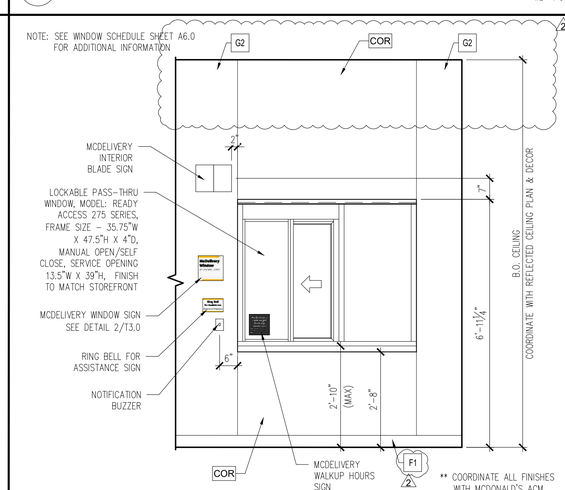

** COORDINATE ALL FINISHES WITH MCDONALD'S ACM PRIOR TO INSTALLATION

7 ELEVATION @ LATE NIGHT DELIVERY WINDOW

1/2" =1'-0"

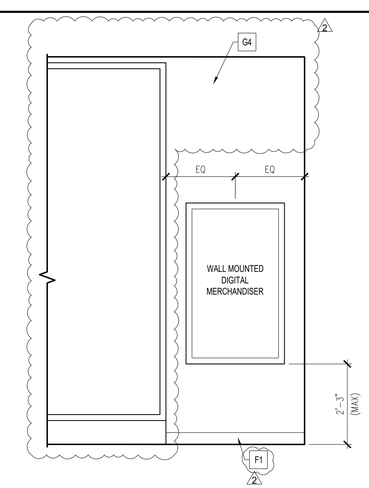

** COORDINATE ALL FINISHES WITH MCDONALD'S ACM PRIOR TO INSTALLATION

8 ELEVATION @ NON-DT VESTIBULE

1/2" =1'-0"

LINGLE DESIGN GROUP INC
158 WEST MAIN STREET
LENA, IL 61048
815.369.9155
1764 BLAKE ST
DENVER, CO 8020
303.974.5873
WWW.LINGLEDESIGN.COM

© ALL DRAWINGS AND WRITTEN MATERIAL CONTAINED HEREIN ARE THE PROPERTY OF THE LINGLE DESIGN GROUP, INC. THEY MAY NOT BE REVISED, COPIED, REUSED, OR DISCLOSED IN ANY MANNER WITHOUT WRITTEN AUTHORIZATION FROM THE ARCHITECT.

CARL LINGLE LICENSED 7997 KANSAS ARCHITECT

04-08-26

STATE ID: 150404

PROJECT #: 26-028

NATIONAL #: 44655

DRAWN BY: CR

CHECKED BY: JK

DATE: 04/08/26 - PERMIT / BID SET

REVISIONS

1. 05/07/26 - QC COMMENTS/ADA UPDATE
2. 06/22/26 - CITY COMMENTS / DECOR

CLIENT

McDonald's USA, LLC

PROTOTYPE

BB20 4584 WW-HB

ISSUE DATE 02/25

ADDRESS

707 1/2 METROPOLITAN AVE
LEAVENWORTH, KS 66048

SHEET TITLE

ENLARGED FRONT COUINTER PLAN

SHEET NUMBER:

A4.2

GENERAL NOTES

- ALL WALL LAMINATE PANELING MANUFACTURED BY DECOR, PURCHASE AND INSTALL BY G.C. U.N.O.
- ALL ELEMENTS 'BY CP' TO BE ORDERED BY CENTRAL PURCHASING AND INSTALLED BY GC, UNO.
- KIOSK SIGNAGE BY G.C. – ORDER FROM AMANDA GUSTAFSON W/ ALTRUA (agustufson@altrua.com) 'CREDIT ONLY' & 'CASH / CREDIT' KIOSK SIGNAGE

LEGEND

XX — TYPICAL FINISHES – SEE SHEET A1.4 FOR FINISH PLAN AND SCHEDULE.

XX — DECOR FINISHES – SEE DECOR PLANS FOR ADDITIONAL FINISHES AND NOTES.

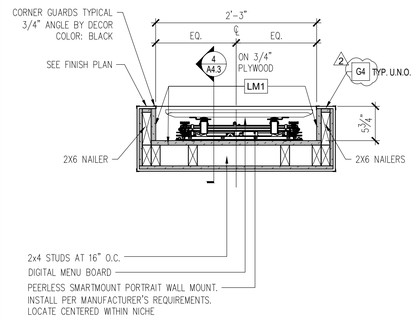

** COORDINATE ALL FINISHES WITH MCDONALD'S ACM PRIOR TO INSTALLATION

3 ENLARGED PLAN SECTION @ DIGITAL MERCHANDISER

Scale: 1"=1'-0"

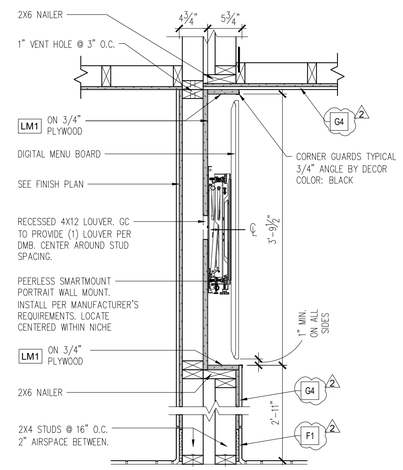

** COORDINATE ALL FINISHES WITH MCDONALD'S ACM PRIOR TO INSTALLATION

4 SECTION @ DIGITAL MERCHANDISER

Scale: 1"=1'-0"

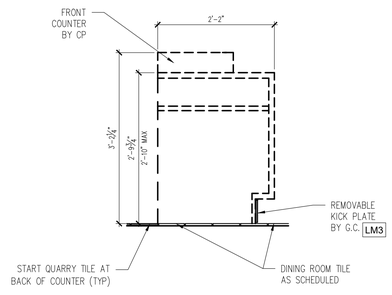

5 FRONT COUNTER POD SECTION

3/4" =1'-0"

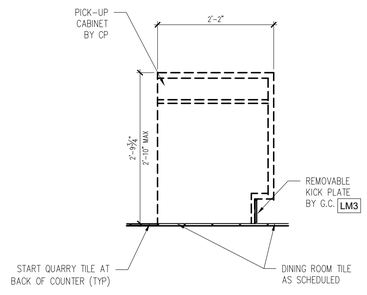

6 PICK-UP POD SECTION

3/4" =1'-0"

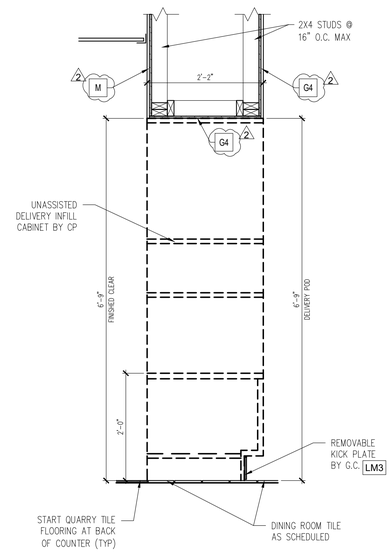

7 UNASSISTED DELIVERY POD SECTION

3/4" =1'-0"

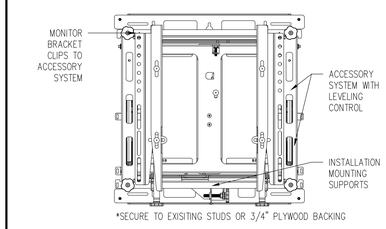

REFER TO MANUFACTURER'S INSTALLATION INSTRUCTIONS

8 DIGITAL MENU BOARD BRACKET DETAIL

1 1/2" =1'-0"

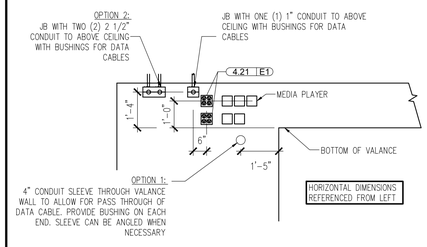

10 SAM WALL REAR ELEVATION

N.T.S.

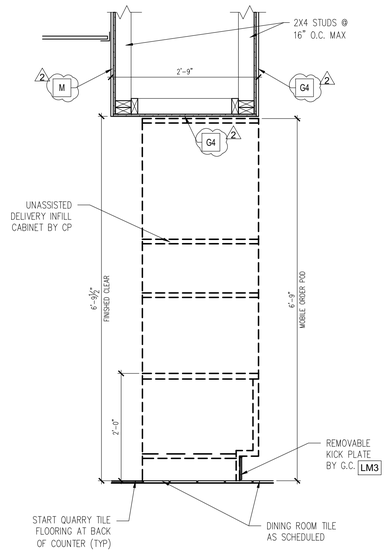

11 UNASSISTED MOBILE ORDER POD SECTION

3/4" =1'-0"

LINGLE DESIGN GROUP INC
158 WEST MAIN STREET
LENA, IL 61048
815.369.9155
1764 BLAKE ST
DENVER, CO 8020
303.974.5873
WWW.LINGLEDESIGN.COM

© ALL DRAWINGS AND WRITTEN MATERIAL CONTAINED HEREIN ARE THE PROPERTY OF THE LINGLE DESIGN GROUP, INC. THEY MAY NOT BE REVISED, COPIED, REUSED, OR DISCLOSED IN ANY MANNER WITHOUT WRITTEN AUTHORIZATION FROM THE ARCHITECT.

CAREL LINGLE LICENSED 7997 KANSAS ARCHITECT

04-08-26

STATE ID: 150404

PROJECT #: 26-028

NATIONAL #: 44655

DRAWN BY: CR

CHECKED BY: JK

DATE:
04/08/26 - PERMIT / BID SET

REVISIONS

1 05/07/26 - QC COMMENTS/ADA UPDATE

2 06/22/26 - CITY COMMENTS / DECOR

CLIENT

McDonald's USA, LLC

PROTOTYPE

BB20 4584 WW-HB

ISSUE DATE 02/25

ADDRESS

707 1/2 METROPOLITAN AVE
LEAVENWORTH, KS 66048

SHEET TITLE

ENLARGED FRONT COUINTER DETAILS

SHEET NUMBER:

A4.3

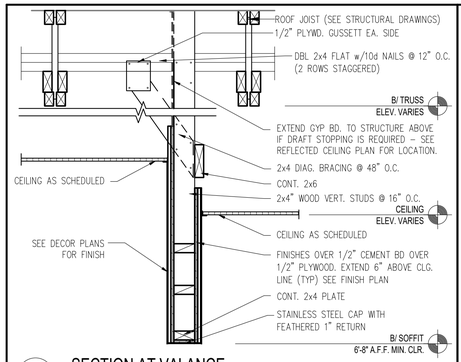

1 SECTION AT VALANCE

1" = 1'-0"

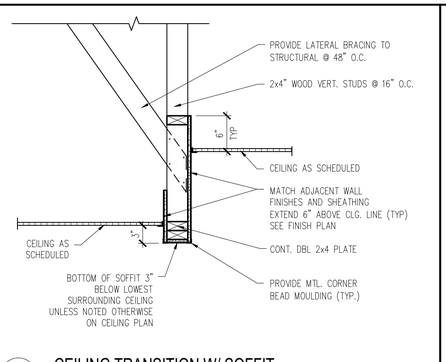

2 CEILING TRANSITION W/ SOFFIT

1" = 1'-0"

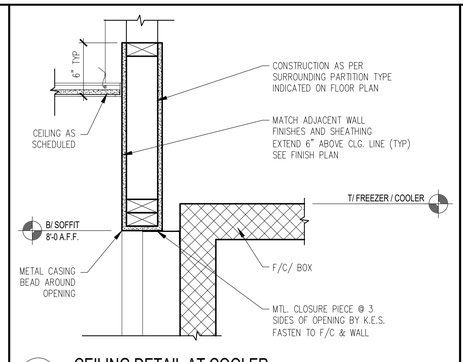

3 CEILING DETAIL AT COOLER

1 1/2" = 1'-0"

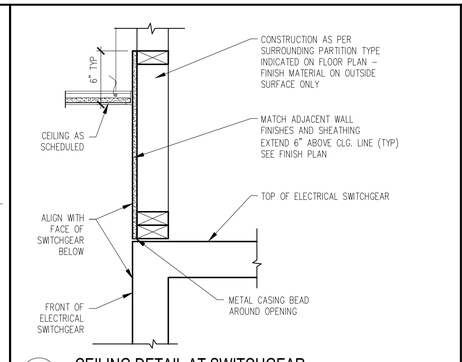

4 CEILING DETAIL AT SWITCHGEAR

1 1/2" = 1'-0"

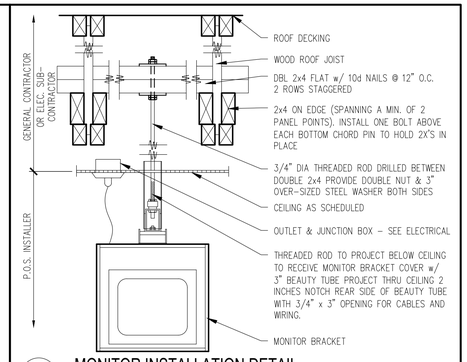

5 MONITOR INSTALLATION DETAIL

1 1/2" = 1'-0"

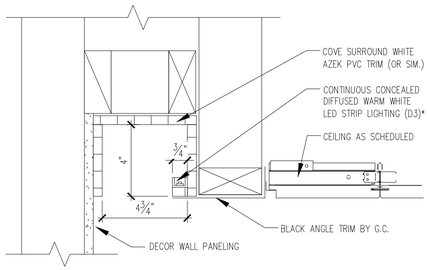

NOTES:
CONTRACTOR TO ENSURE EVEN DISTRIBUTION OF LIGHT WITH NO HOT SPOTS OR SHADOWING.

6 COVE LIGHTING DETAIL (COORDINATE WITH DECOR)

3" = 1'-0"

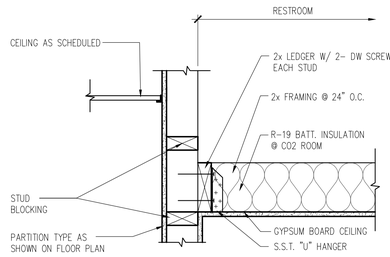

7 RESTROOM CEILING DETAIL

1 1/2" = 1'-0"

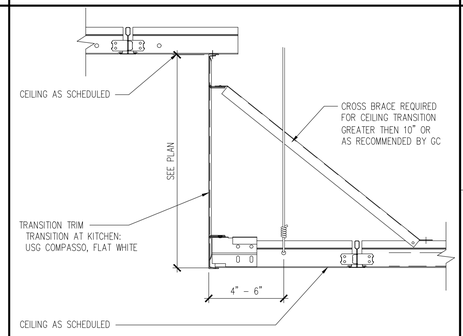

8 ACOUSTIC CEILING TRANSITION (COORDINATE WITH DECOR)

1 1/2" = 1'-0"

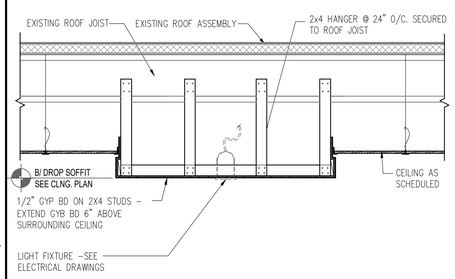

9 FRAMED CEILING DETAIL (COORDINATE WITH DECOR)

1/2" = 1'-0"

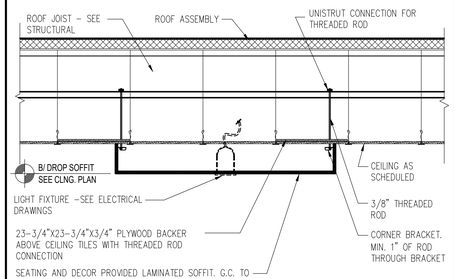

10 UNISTRUT CEILING DETAIL (COORDINATE WITH DECOR)

1/2" = 1'-0"

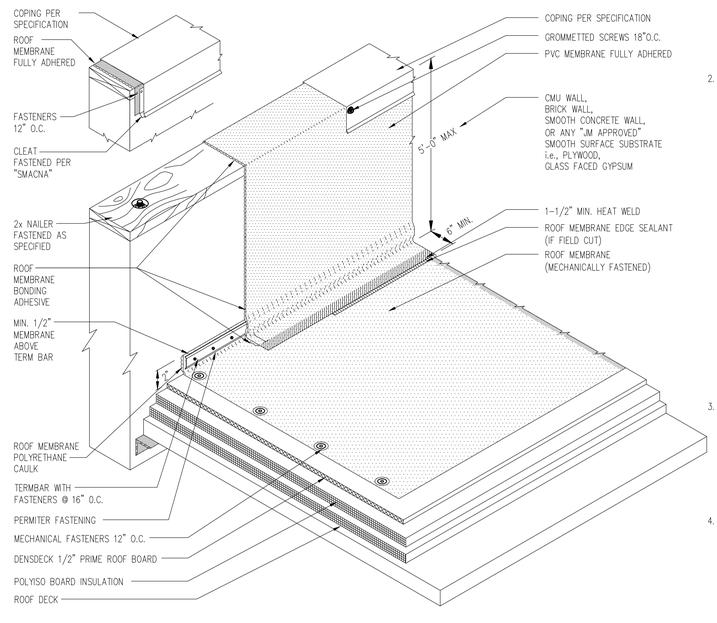

THIS DETAIL IS ALSO SUITABLE FOR TERMINATION OF FLEECE BACKED MEMBRANES. NON FLEECE BACK MEMBRANE IS REQUIRED FOR WALL FLASHINGS.

16 ROOFING SYSTEM DETAIL

N.T.S.

ROOFING SYSTEM

1. MANUFACTURERS AND PRODUCTS:
   A. DURO-LAST PVC ROOFING SYSTEM
   B. JM-PVC. REFER TO JOHNS MANVILLE WEBSITE (www.jm.com) FOR MOST UP-TO-DATE INFORMATION.

   NO SUBSTITUTIONS ALLOWED

2. SPECIFIED ROOFING SYSTEMS (AS SHOWN): HEAT-WELDABLE SINGLE-PLY 50 MIL PVC ROOFING SYSTEM, INSTALLED OVER RIGID INSULATION ON WOOD ROOF DECK HAVING A SLOPE OF 3/8"/FT. MATERIALS SHALL BE AS FOLLOWS:
   A. SINGLE-PLY ROOFING SYSTEM AS MANUFACTURED BY MANUFACTURER LISTED ABOVE TO COMPLY WITH ASTM E 108 OR UL 790, ASTM D-6878, AND FMG I-90 FOR WIND UPLIFT.
   B. FASTENERS: METAL FASTENERS AND PLATES AS PER MANUFACTURER.
   C. ACCESSORIES: PRE-FABRICATED CURBS, FLASHING, CORNERS, TERMINATION BARS, PIPE FLASHING, VENT FLASHING ETC. AS PER MANUFACTURER.
   D. PLEASE SEE SINGLE-PLY FLASHING SPECIFICATIONS FOR A FULL DESCRIPTION OF INSTALLATION INSTRUCTIONS AND REQUIREMENTS WHICH ARE CONSIDERED A PART OF THIS DETAIL.
   E. ANY CARPENTRY OR METAL WORK SHOULD BE DESIGNED AND CONSTRUCTED IN ACCORDANCE WITH LOCAL CODE REQUIREMENTS AND/OR PROJECT SPECIFICATIONS. THESE COMPONENTS SHOULD BE REVIEWED AND APPROVED BY A LICENSED DESIGN PROFESSIONAL. CONTACT MANUFACTURER FOR METAL OPTIONS TO BE INCLUDED WITHIN THE MANUFACTURER'S GUARANTEE.
   F. ROOF MEMBRANE EDGE SEALANT IS REQUIRED ON ALL CUT OR NON-ENCAPSULATED EDGES OF REINFORCED MEMBRANE. THIS INCLUDES FACTORY CUT MEMBRANE
3. WALKWAYS:
   A. 30" WIDE WALKWAY ROLL, HOT AIR WELDED TO MEMBRANE.
   B. PROVIDE WALKWAY FROM ROOF LADDER EXIT TO ALL ROOF TOP EQUIPMENT AS PER ROOF PLAN.
   C. INSTALL WALKWAY ACCORDING TO WALKWAY PAD MANUFACTURER'S WRITTEN INSTRUCTION.
4. RIGID INSULATION:
   PROVIDE REQUIRED LAYERS OF POLYISOCYANURATE INSULATION W/ 1/2" "DENSDECK" COVER BOARD TO MEET A MINIMUM CONTINUOUS R-30 VALUE – THICKNESS AS REQUIRED. PROVIDE POSITIVE SLOPE TO ALL ROOF DRAINS. SEE ROOF PLAN. PROVIDE TOP LAYER PROTECTION MATERIAL AS PER MANUFACTURERS RECOMMENDATIONS. BOTTOM LAYER OF INSULATION TO HAVE INTEGRAL THERMAL BARRIER OR APPROVED ROOFING MANUFACTURER'S THERMAL UNDERLAYMENT SHEET. ASSEMBLY SHALL COMPLY WITH UL 1256 OR FMG 4450 AND ASTM C 1289, TYPE I OR II.
5. TAPERED INSULATION;
   PROVIDE TAPERED INSULATION AS REQUIRED FOR POSITIVE DRAINAGE TO ROOF DRAINS AS INDICATED PER ROOF PLAN ABOVE. 1/4" PER FOOT MIN. REQUIRED.
6. EXHAUST FANS:
   PROVIDE ADDITIONAL LAYER OF ROOF MEMBRANE AROUND EXHAUST FANS AS INDICATED PER ROOF PLAN.

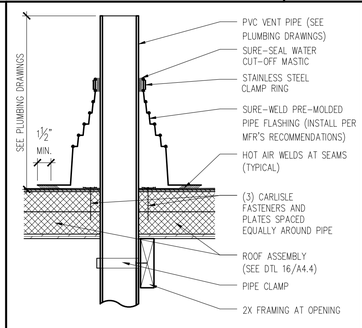

13 VENT PENETRATION DETAIL

1 1/2" = 1'-0"

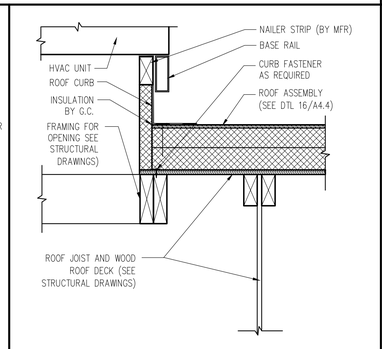

14 HVAC UNIT ROOF CURB DETAIL

1 1/2" = 1'-0"

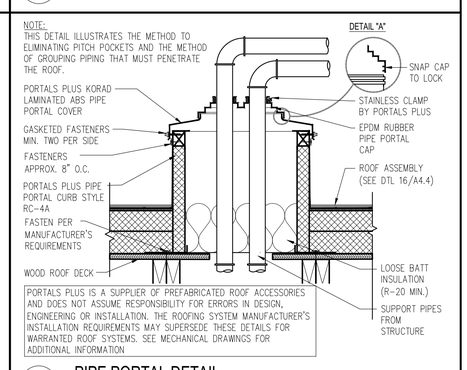

15 PIPE PORTAL DETAIL

1 1/2" = 1'-0"

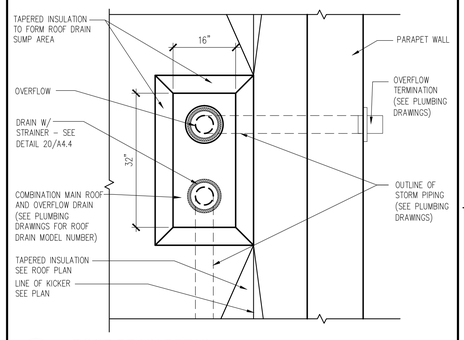

18 ROOF DRAIN DETAIL

3/4" = 1'-0"

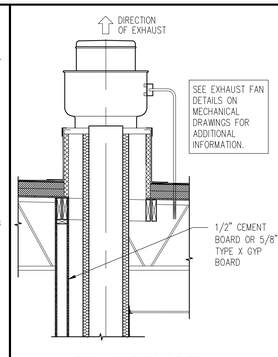

19 EXHAUST FAN DETAIL

1/2" = 1'-0"

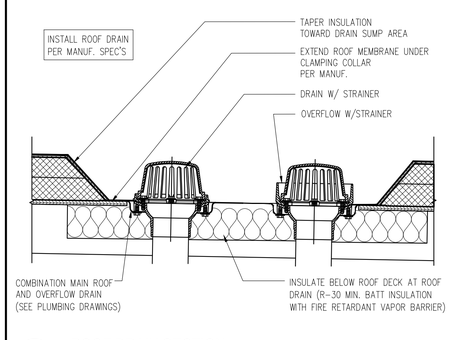

20 ROOF DRAIN SECTION

3/4" = 1'-0"

LINGLE DESIGN GROUP INC
158 WEST MAIN STREET
LENA, IL 61048
815.369.9155
1764 BLAKE ST
DENVER, CO 8020
303.974.5873
WWW.LINGLEDESIGN.COM

© ALL DRAWINGS AND WRITTEN MATERIAL CONTAINED HEREIN ARE THE PROPERTY OF THE LINGLE DESIGN GROUP, INC. THEY MAY NOT BE REVISED, COPIED, REUSED, OR DISCLOSED IN ANY MANNER WITHOUT WRITTEN AUTHORIZATION FROM THE ARCHITECT.

CARL LINGLE LICENSED 7997 KANSAS ARCHITECT

04-08-26

STATE ID: 150404
PROJECT #: 26-028
NATIONAL #: 44655
DRAWN BY: CR
CHECKED BY: JK

DATE:
04/08/26 - PERMIT / BID SET

REVISIONS
1. 05/07/26 - QC COMMENTS/ADA UPDATE
2. 06/22/26 - CITY COMMENTS / DECOR

CLIENT
McDonald's USA, LLC

PROTOTYPE
BB20 4584 WW-HB
ISSUE DATE 02/25

ADDRESS
707 1/2 METROPOLITAN AVE
LEAVENWORTH, KS 66048

SHEET TITLE
CEILING & ROOF DETAILS

SHEET NUMBER:
A4.4

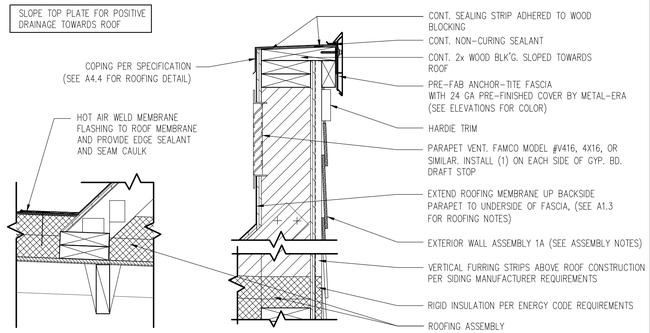

1 DETAIL- FASCIA @ METAL REVEAL PANEL PARAPET

1 1/2" = 1'-0"

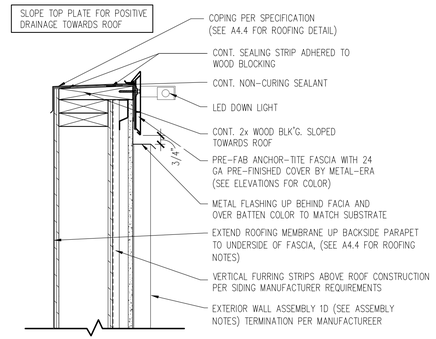

2 DETAIL- FASCIA @ BATTEN PARAPET

1 1/2" = 1'-0"

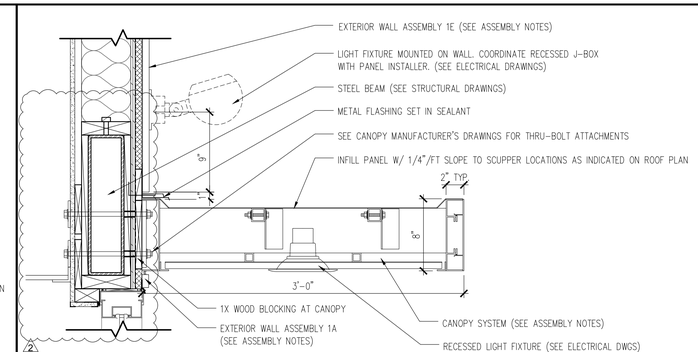

3 DETAIL- CANOPY ABOVE WINDOW

1 1/2" = 1'-0"

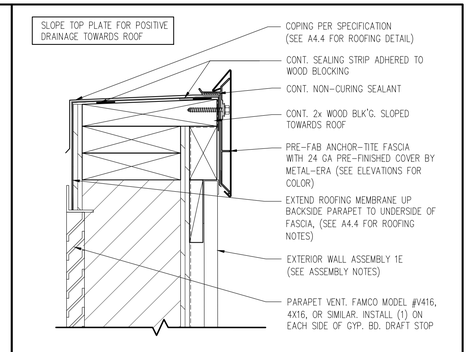

4 DETAIL- FASCIA @ HARDIE PANEL PARAPET

3" = 1'-0"

EXTERIOR WINDOW ASSEMBLY

(STOREFRONT & ENTRANCE SYSTEM)

GLAZING REQ'S: U VALUE = 0.34 U VALUE "DOOR"= 0.63 SHGC = 0.38 △1

1. DARK BRONZE ANODIZED ALUMINUM FRAME, THERMALLY BROKEN WITH HEAD RECEIVER CHANNEL.
2. 1" TEMPERED INSULATED GLAZING
3. PROVIDE FLASHING AT HEAD & SILL – CONTINUOUS SEALANT.
4. PROVIDE METAL CAP AT EXTERIOR AS SHOWN IN DETAILS
5. 1/2" CORIAN SILL AT INTERIOR

CANOPY SYSTEM

CANOPY INFORMATION SHOWN IN CONSTRUCTION DOCUMENTS IS FOR DESIGN INTENT ONLY. APPROVED MANUFACTURERS SHALL PROVIDE A COMPLETE AND CODE COMPLIANT FINAL DESIGN. REFER TO ELEVATIONS FOR COLOR OF ELEMENTS

1. CANOPY STRUCTURE/OUTRIGGERS: CONT. 2" x 8" PAINTED ALUM. TUBE. PROVIDE CLOSURE PIECE WHERE TUBE ENDS ARE EXPOSED.
2. WHERE INDICATED ON ROOF PLAN, PROVIDE PAINTED ALUM. PANEL INFILL WITH INTEGRAL GUTTER AND SCUPPER TO MATCH OUTRIGGERS. PANEL TO PROVIDE POSITIVE SLOPE FOR DRAINAGE.
3. SYSTEM SHALL ALLOW FOR MOVEMENT AT EXPANSION JOINTS AND FOR MOVEMENT OF EXTERIOR WALL SYSTEM ON WHICH THE CANOPY IS MOUNTED.
4. STRUCTURAL ATTACHMENTS & LOAD CALCULATIONS SHALL BE FURNISHED BY CANOPY SYSTEM DESIGNER OF RECORD. SUPPLIER'S DESIGNER OF RECORD SHALL DESIGN PER PREVAILING CODES.
5. CANOPY SYSTEM SHALL BE SELECTED FROM ONE OF THE SUPPLIERS LISTED BELOW.
6. MANUFACTURER SHALL PROVIDE INSTALLER WITH INSTALLATION INSTRUCTIONS. MANUFACTURER SHALL DESIGN CANOPY IN ACCORDANCE WITH THE WALL SYSTEM AND BLOCKING AS INDICATED IN THE CONSTRUCTION DOCUMENTS.
7. INSTALLER SHALL NOTIFY CANOPY DESIGNER OF RECORD, McDONALD'S ACM, G.C. AND ARCHITECT OF ANY DEFICIENCIES THAT WOULD NOT ALLOW FOR THE PROPER INSTALLATION OF THE CANOPY. CANOPY SHALL NOT BE INSTALLED UNTIL DEFICIENCIES HAVE BEEN CORRECTED IN ACCORDANCE WITH THE CONSTRUCTION DOCUMENTS AND THE CANOPY MANUFACTURER'S INSTALLATION INSTRUCTIONS.

CANOPY SYSTEM BY:

AWNEX (770) 704-7140	ALL-LITE (817) 509-2300	GREENHECK (715) 355-3942
www.awnexinc.com	www.alllite.com	www.greenheck.com

FOUNDATION AND PERIMETER INSULATION

1. SEE STRUCTURAL DRAWINGS FOR FOUNDATION AND SLAB DETAILS
2. PROVIDE RIGID UNDER SLAB INSULATION AS FOLLOWS:
   - R-VALUE: R-15
   - VERTICALLY FROM TOP OF FOOTING TO TOP OF SLAB.
   - HORIZONTALLY FROM FOUNDATION WALL 2'-0" MIN.

EXTERIOR WALL ASSEMBLIES

FROM EXTERIOR TO INTERIOR

1A. FIBER CEMENT HORIZONTAL LAP SIDING
   1. JAMES HARDIE, HARDIEPLANK LAP SIDING, SMOOTH, 8 1/4" WIDTH, 7" EXPOSURE, HZ5, COLOR: SEE ELEVATIONS.
      a. COORDINATE FIBER CEMENT PANELS WITH FLASHING, TRIM, PARAPET WALLS AND OTHER ADJOINING WORK TO PROVIDE A LEAKPROOF, SECURE AND NONCORROSIVE INSTALLATION. INSTALL A 2" STARTER STRIP TO ENSURE A CONSISTENT PLANK ANGLE. OVERLAP PANELS 1 1/4" MIN. PROVIDE 7" EXPOSURE. SEE EXTERIOR ELEVATIONS.
      b. USE A POLYCRYSTALLINE DIAMOND-TIPPED FIBER CEMENT BLADE FOR CIRCULAR, MITER, AND TABLE SAWS.
   2. OVER WALL ASSEMBLY 2

1B. NOT USED

1C. VERTICAL BATTEN SYSTEM – (WHEN ADJACENT TO CITADEL ACM PANEL, ASSEMBLY 1E)
   1. ALUMINUM BATTEN W/MOUNTING BACK RAIL. SIZE: 2" WIDE x 2" DEEP. REFER TO EXTERIOR ELEVATIONS FOR COLOR. INSTALL PER LOCAL CODES AND MANUFACTURERS SPECIFICATIONS ON TERMINATION AND INSTALLATION DETAILS. BY SUPPLIER. GC INSTALL
   2. 1/2" EXTERIOR HIGH DENSITY OVERLAY (HDO) PLYWOOD, BB, GROUP 1. HDO BOTH FACES. APA TRADEMARKED. SAND WITH COURSE GRIT ALL SURFACES PRIOR TO PRIMING. PRIME AND PAINT BOTH SIDES AND ALL EDGES. BY GC, INSTALL BY GC. ALUM EDGE TRIM BY GC. COLOR TO MATCH SUBSTRATE.
   3. 1.75" – 0.125 ALUMINUM CHANNEL
   4. OVER WALL ASSEMBLY 2

   VERTICAL BATTEN SYSTEM BY:
   B+N INDUSTRIES (650) 393-2347 — TALENE KAPEGHIAN — tkapeghian@bnind.com
   TUBELITE (214) 288-5801 — CHASITY DICKSON — mcdonalds@tubeliteinc.com

1D. VERTICAL BATTEN SYSTEM – (TYPICAL)
   1. ALUMINUM BATTEN W/MOUNTING BACK RAIL. SIZE: 2" WIDE x 2" DEEP. REFER TO EXTERIOR ELEVATIONS FOR COLOR. INSTALL PER LOCAL CODES AND MANUFACTURERS SPECIFICATIONS ON TERMINATION AND INSTALLATION DETAILS. BY SUPPLIER. GC INSTALL
   2. 1/2" EXTERIOR HIGH DENSITY OVERLAY (HDO) PLYWOOD, BB, GROUP 1. HDO BOTH FACES. APA TRADEMARKED. SAND WITH COURSE GRIT ALL SURFACES PRIOR TO PRIMING. PRIME AND PAINT BOTH SIDES AND ALL EDGES. BY GC, INSTALL BY GC. ALUM EDGE TRIM BY GC. COLOR TO MATCH SUBSTRATE.
   3. 1" – 0.125 ALUMINUM CHANNEL
   4. OVER WALL ASSEMBLY 2

   VERTICAL BATTEN SYSTEM BY:
   B+N INDUSTRIES (650) 393-2347 — TALENE KAPEGHIAN — tkapeghian@bnind.com
   TUBELITE (214) 288-5801 — CHASITY DICKSON — mcdonalds@tubeliteinc.com

1E. FIBER CEMENT ARCHITECTURAL PANEL
   1. FIBER CEMENT PANELS: ARCHITECTURAL PANELS BY JAMES HARDIE, 4'X10' PANELS, FINE SAND TEXTURE, EXPOSURE HZ5
      COLOR: SEE ELEVATIONS.
      a. COORDINATE FIBER CEMENT PANELS WITH FLASHING, TRIM, PARAPET WALLS AND OTHER ADJOINING WORK TO PROVIDE A LEAKPROOF, SECURE AND NONCORROSIVE INSTALLATION. INSTALL A 2" STARTER STRIP TO ENSURE A CONSISTENT PANEL ANGLE. VERTICAL "Y" TRIM AND LOW PROFILE HORIZONTAL "Z" TRIM AT BUTT JOINTS; 2 PIECE "J" TRIM AT FIELD EDGES AND MATERIAL TRANSITIONS. SEE EXTERIOR ELEVATIONS.
      b. USE A POLYCRYSTALLINE DIAMOND-TIPPED FIBER CEMENT BLADE FOR CIRCULAR, MITER, AND TABLE SAWS.

2. 3/4" RIGID INSULATION, R-3.8 VALUE
3. PERMEABLE BUILDING WRAP. INSTALL PER LOCAL CODES AND MFR'S SPEC'S.
4. 1/2" EXTERIOR GRADE PLYWOOD.
5. 2x6 WOOD STUD FRAMING @ 16" O.C. (WITH CONTINUOUS DRAFTSTOP/FIRESTOP BLOCKING AT FINISH CEILING LEVEL).
6. 5 1/2" THICK UNFACED BATT INSULATION (R VALUE = 20 MIN.).
7. "CERTAINTEED MEMBRAIN" SMART VAPOR RETARDER (SEMI-VAPOR PERMEABLE) BY CERTAINTEED OR EQUAL.
8. 1X6 HORIZONTAL WOOD FURRING STRIPS @ 24" O.C. FOR ALL DINING ROOM EXTERIOR WALLS HOUSING STOREFRONT WINDOW ASSEMBLY.
9. 1/2" CEMENT BOARD SUBSTRATE AT DINING, VESTIBULE AND RESTROOM TILE LOCATIONS.

   1/2" CEMENT BOARD OVER 1/2" PLYWOOD SUBSTRATE AT B.O.H. WT2 TILE LOCATIONS.

   NON TILE LOCATIONS: 1/2" GYPSUM BOARD TO EXTEND TO DECK ABOVE. UNLESS NOTED OTHERWISE. ALL GYP. BOARD MUST SCORE 10 PER ASTM D3273. REFERENCE CURRENT PROJECT MANUAL.
10. SEE A1.0 & FINISH SCHEDULE FOR ADDITIONAL SUBSTRATE INFORMATION.

5 WALL ASSEMBLY NOTES

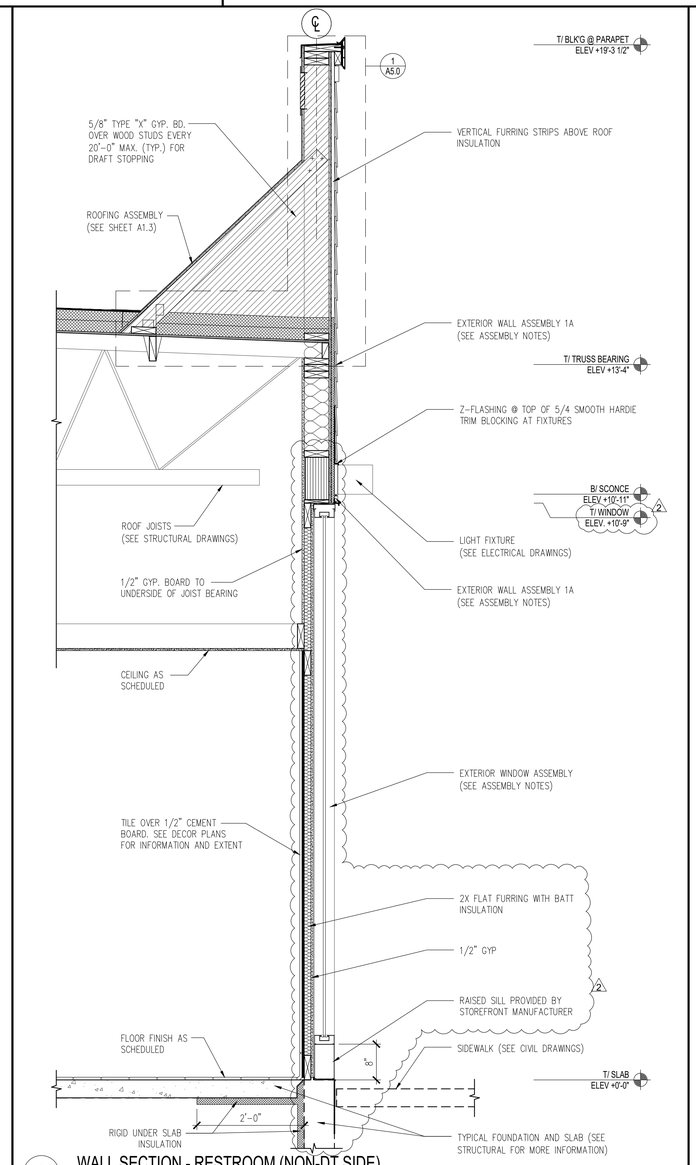

6 WALL SECTION - RESTROOM (NON-DT SIDE)

3/4" = 1'-0"

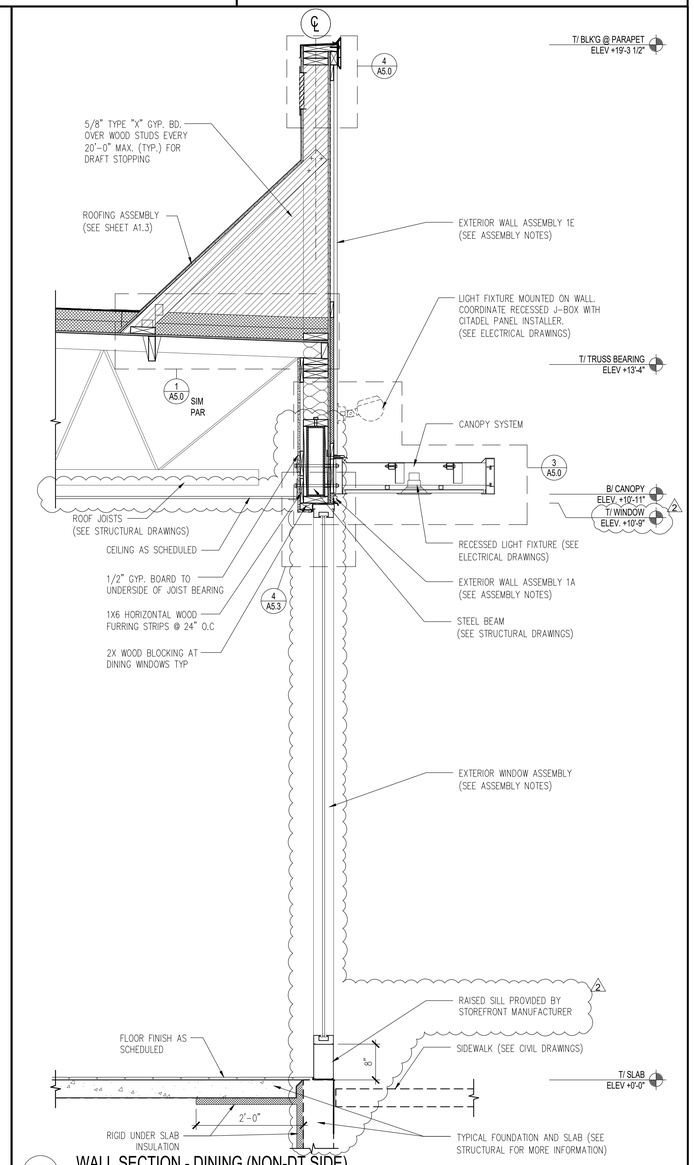

7 WALL SECTION - DINING (NON-DT SIDE)

3/4" = 1'-0"

LINGLE DESIGN GROUP INC
158 WEST MAIN STREET
LENA, IL 61048
815.369.9155
1764 BLAKE ST
DENVER, CO 8020
303.974.5873
WWW.LINGLEDESIGN.COM

© ALL DRAWINGS AND WRITTEN MATERIAL CONTAINED HEREIN ARE THE PROPERTY OF THE LINGLE DESIGN GROUP, INC. THEY MAY NOT BE REVISED, COPIED, REUSED, OR DISCLOSED IN ANY MANNER WITHOUT WRITTEN AUTHORIZATION FROM THE ARCHITECT.

CARL LINGLE LICENSED 7997 KANSAS ARCHITECT

04-08-26

STATE ID: 150404

PROJECT #: 26-028

NATIONAL #: 44655

DRAWN BY: CR

CHECKED BY: JK

DATE:
04/08/26 - PERMIT / BID SET

REVISIONS

1 05/07/26 - QC COMMENTS/ADA UPDATE
2 06/22/26 - CITY COMMENTS / DECOR

CLIENT

McDonald's USA, LLC

PROTOTYPE

BB20 4584 WW-HB
ISSUE DATE 02/25

ADDRESS

707 1/2 METROPOLITAN AVE
LEAVENWORTH, KS 66048

SHEET TITLE

WALL SECTIONS AND DETAILS

SHEET NUMBER:

A5.0

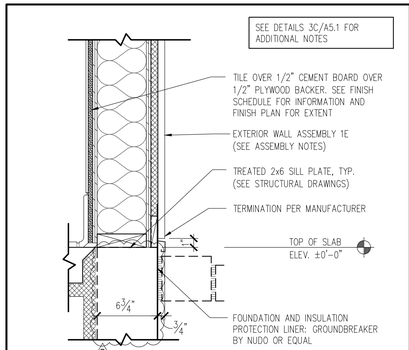

1 DETAIL- HARDIE PANEL TERMINATION

1 1/2" = 1'-0"

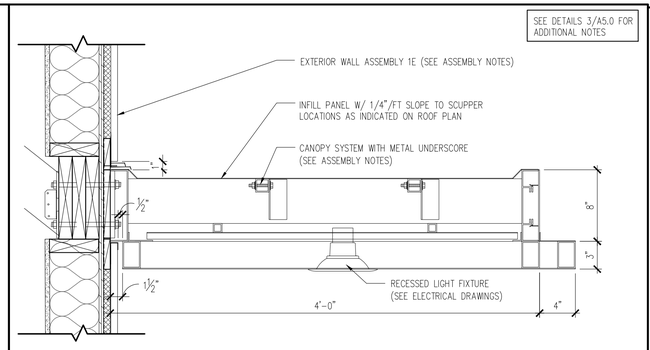

2 DETAIL- CANOPY @ DRIVE-THRU

1 1/2" = 1'-0"

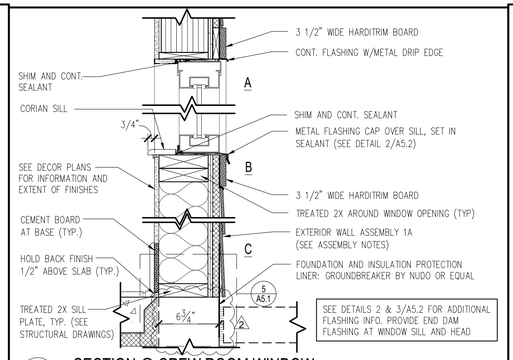

3 SECTION @ CREW ROOM WINDOW

1 1/2" = 1'-0"

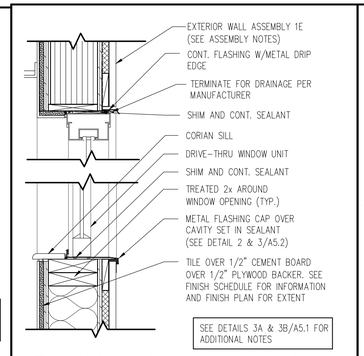

4 SECTION @ DRIVE-THRU WINDOW

1 1/2" = 1'-0"

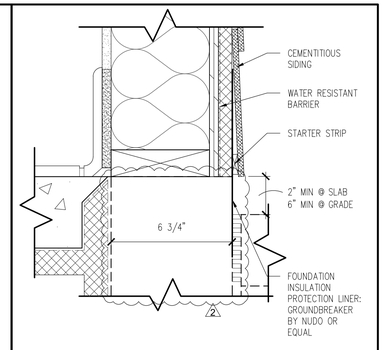

5 FLASHING DETAIL @ FOUNDATION

3" = 1'-0"

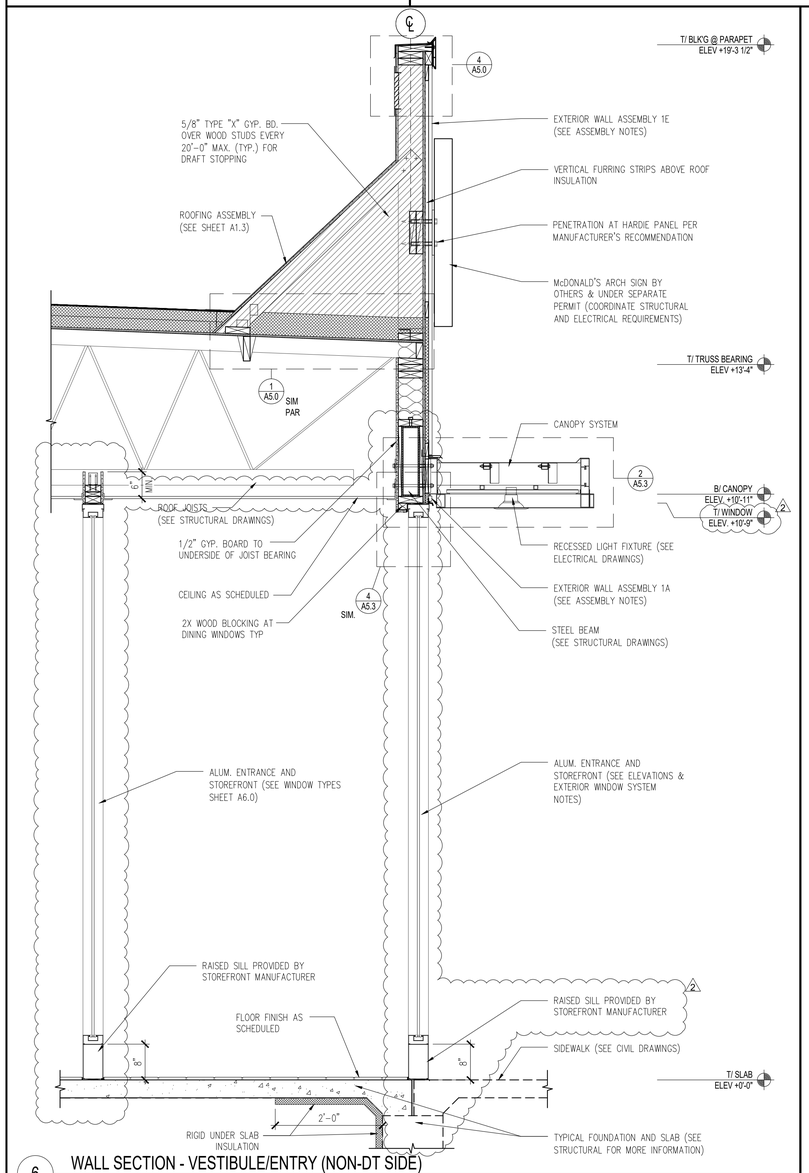

6 WALL SECTION - VESTIBULE/ENTRY (NON-DT SIDE)

3/4" = 1'-0"

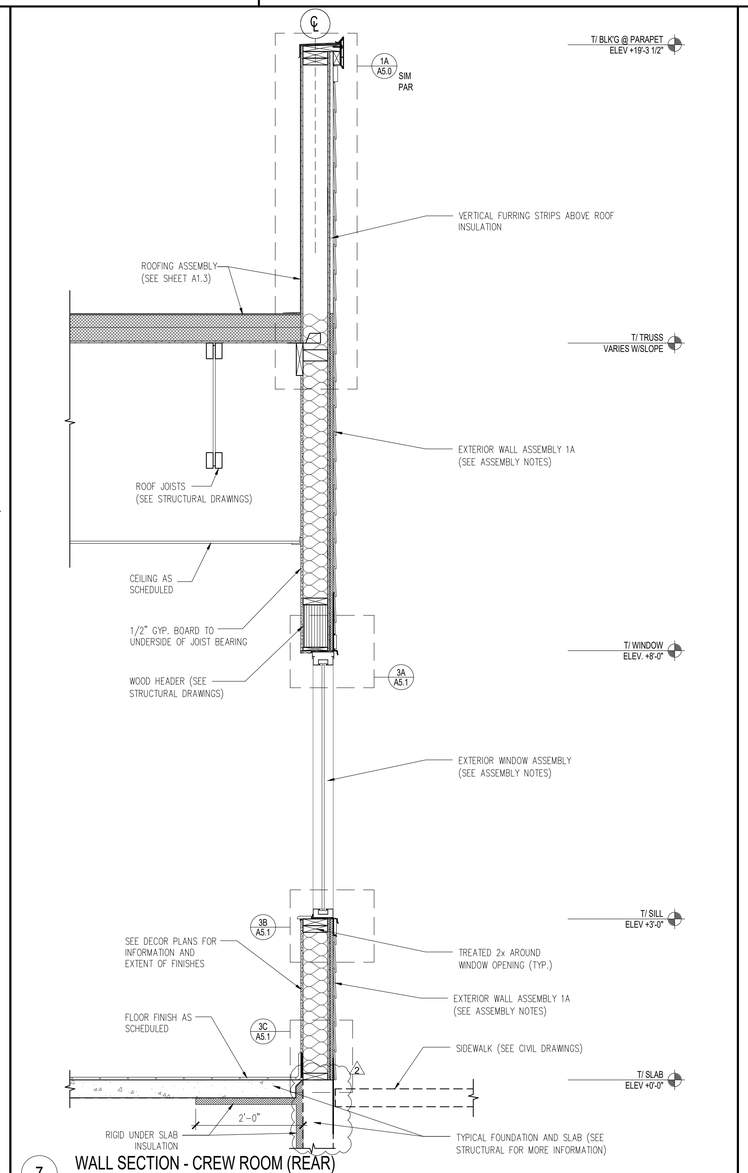

7 WALL SECTION - CREW ROOM (REAR)

3/4" = 1'-0"

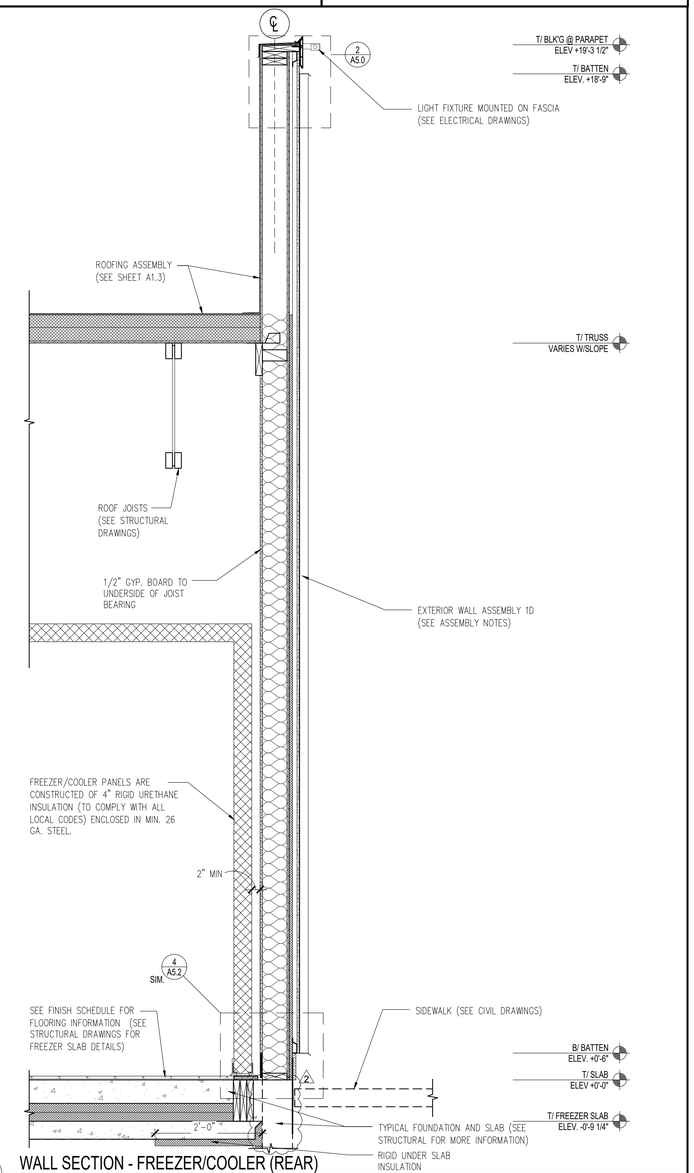

8 WALL SECTION - FREEZER/COOLER (REAR)

3/4" = 1'-0"

LINGLE DESIGN GROUP INC
158 WEST MAIN STREET
LENA, IL 61048
815.369.9155
1764 BLAKE ST
DENVER, CO 8020
303.974.5873
WWW.LINGLEDESIGN.COM

© ALL DRAWINGS AND WRITTEN MATERIAL CONTAINED HEREIN ARE THE PROPERTY OF THE LINGLE DESIGN GROUP, INC. THEY MAY NOT BE REVISED, COPIED, REUSED, OR DISCLOSED IN ANY MANNER WITHOUT WRITTEN AUTHORIZATION FROM THE ARCHITECT.

CARL LINGLE LICENSED 7997 KANSAS ARCHITECT

04-08-26

STATE ID: 150404

PROJECT #: 26-028

NATIONAL #: 44655

DRAWN BY: CR

CHECKED BY: JK

DATE:
04/08/26 - PERMIT / BID SET

REVISIONS
1 05/07/26 - QC COMMENTS/ADA UPDATE
2 06/22/26 - CITY COMMENTS / DECOR

CLIENT
McDonald's USA, LLC

PROTOTYPE
BB20 4584 WW-HB
ISSUE DATE 02/25

ADDRESS
707 1/2 METROPOLITAN AVE
LEAVENWORTH, KS 66048

SHEET TITLE
WALL SECTIONS AND DETAILS

SHEET NUMBER:
A5.1

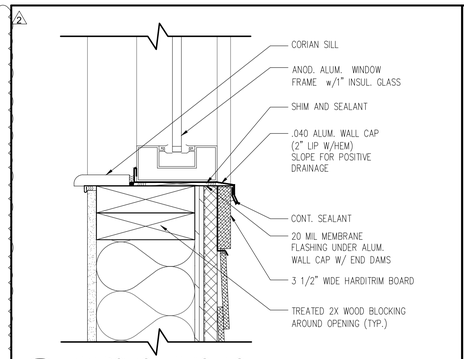

2 WINDOW SILL FLASHING

3" = 1'-0"

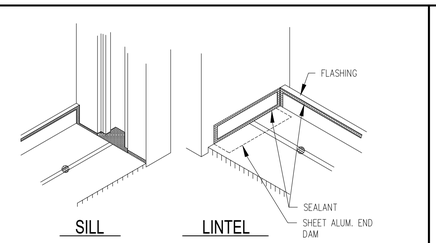

NOTE: SEAL GLASS POCKET OF WINDOW JAMB AT SILL.

NOTE: SEALANT ON BACK LEG OF FLASHING TO BE APPLIED PRIOR TO INSTALLATION OF FRAME.

NOTE: SEAL OVER HEADS OF ALL PERIMETER OPENINGS.

3 FLASHING DETAIL @ JAMB

N.T.S.

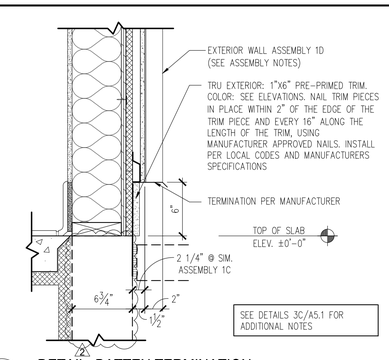

4 DETAIL- BATTEN TERMINATION

1 1/2" = 1'-0"

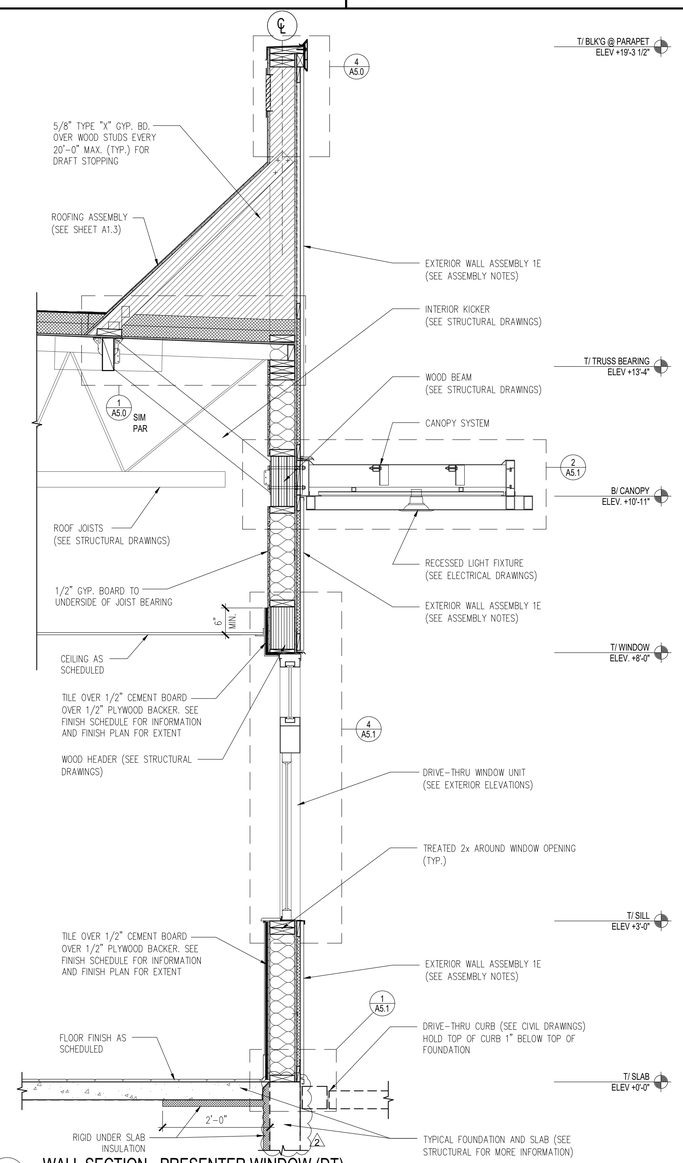

7 WALL SECTION - PRESENTER WINDOW (DT)

3/4" = 1'-0"

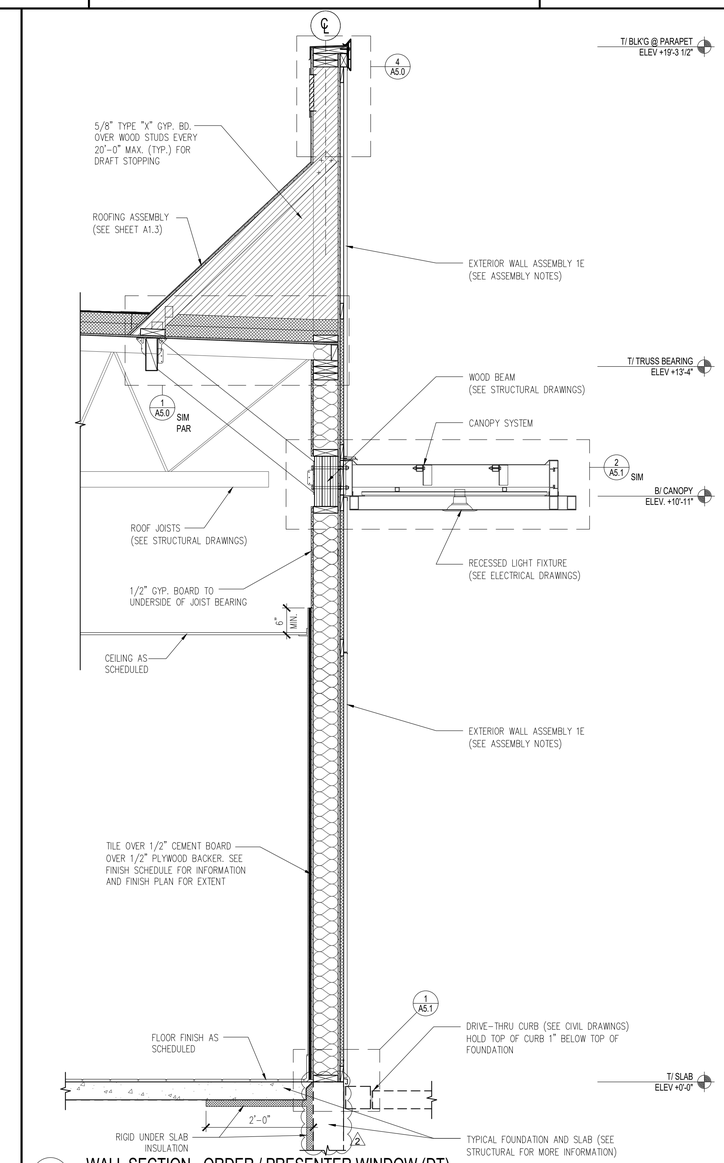

8 WALL SECTION - ORDER / PRESENTER WINDOW (DT)

3/4" = 1'-0"

LINGLE DESIGN GROUP INC
158 WEST MAIN STREET
LENA, IL 61048
815.369.9155
1764 BLAKE ST
DENVER, CO 8020
303.974.5873
WWW.LINGLEDESIGN.COM

© ALL DRAWINGS AND WRITTEN MATERIAL CONTAINED HEREIN ARE THE PROPERTY OF THE LINGLE DESIGN GROUP, INC. THEY MAY NOT BE REVISED, COPIED, REUSED, OR DISCLOSED IN ANY MANNER WITHOUT WRITTEN AUTHORIZATION FROM THE ARCHITECT.

CARL LINGLE LICENSED 7997 KANSAS ARCHITECT

04-08-26

STATE ID: 150404
NATIONAL #: 44655
PROJECT #: 26-028
DRAWN BY: CR
CHECKED BY: JK

DATE:
04/08/26 - PERMIT / BID SET

REVISIONS
1 05/07/26 - QC COMMENTS/ADA UPDATE
2 06/22/26 - CITY COMMENTS / DECOR

CLIENT
McDonald's USA, LLC

PROTOTYPE
BB20 4584 WW-HB
ISSUE DATE 02/25

ADDRESS
707 1/2 METROPOLITAN AVE
LEAVENWORTH, KS 66048

SHEET TITLE
WALL SECTIONS AND DETAILS

SHEET NUMBER:
A5.2

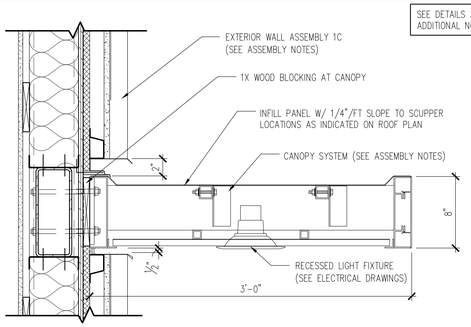

1 DETAIL- CANOPY @ BATTENS

1 1/2" = 1'-0"

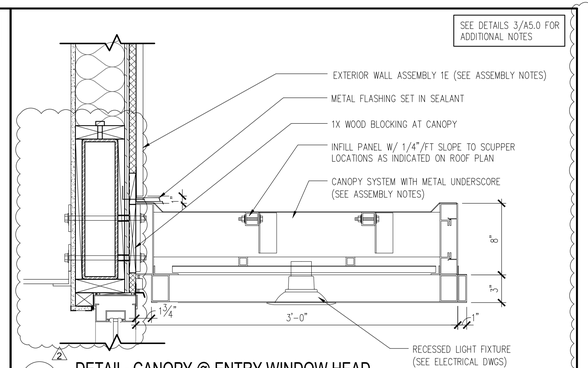

2 DETAIL- CANOPY @ ENTRY WINDOW HEAD

1 1/2" = 1'-0"

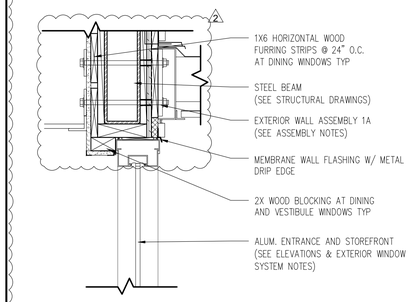

4 DETAIL- STOREFRONT HEADER

1 1/2" = 1'-0"

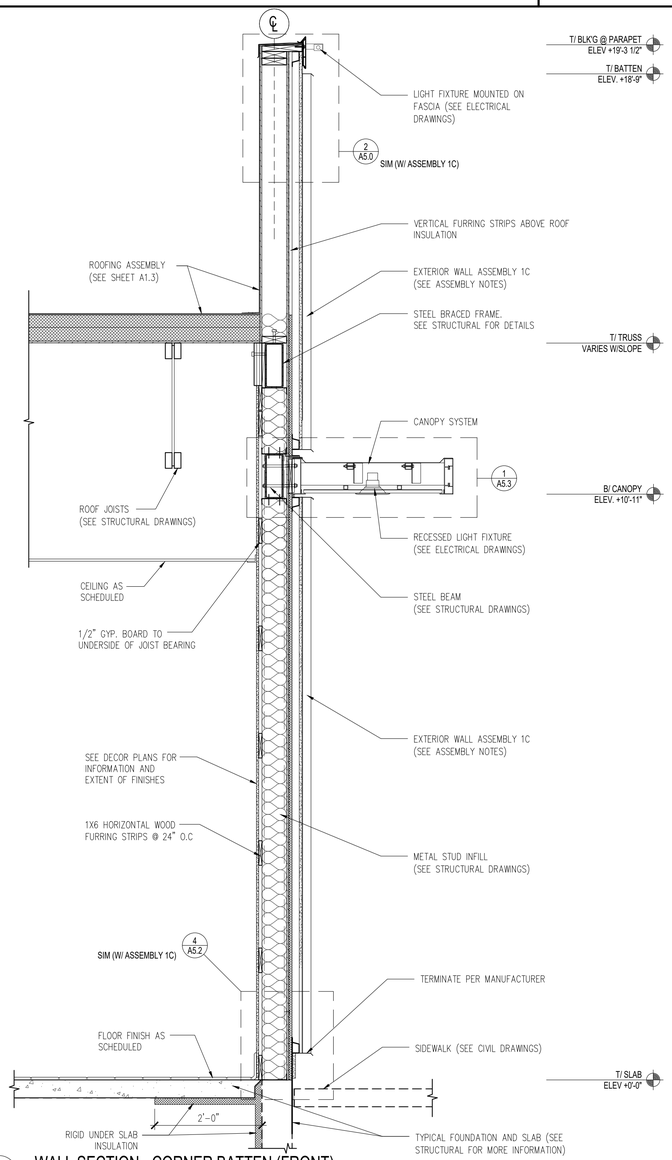

6 WALL SECTION - CORNER BATTEN (FRONT)

3/4" = 1'-0"

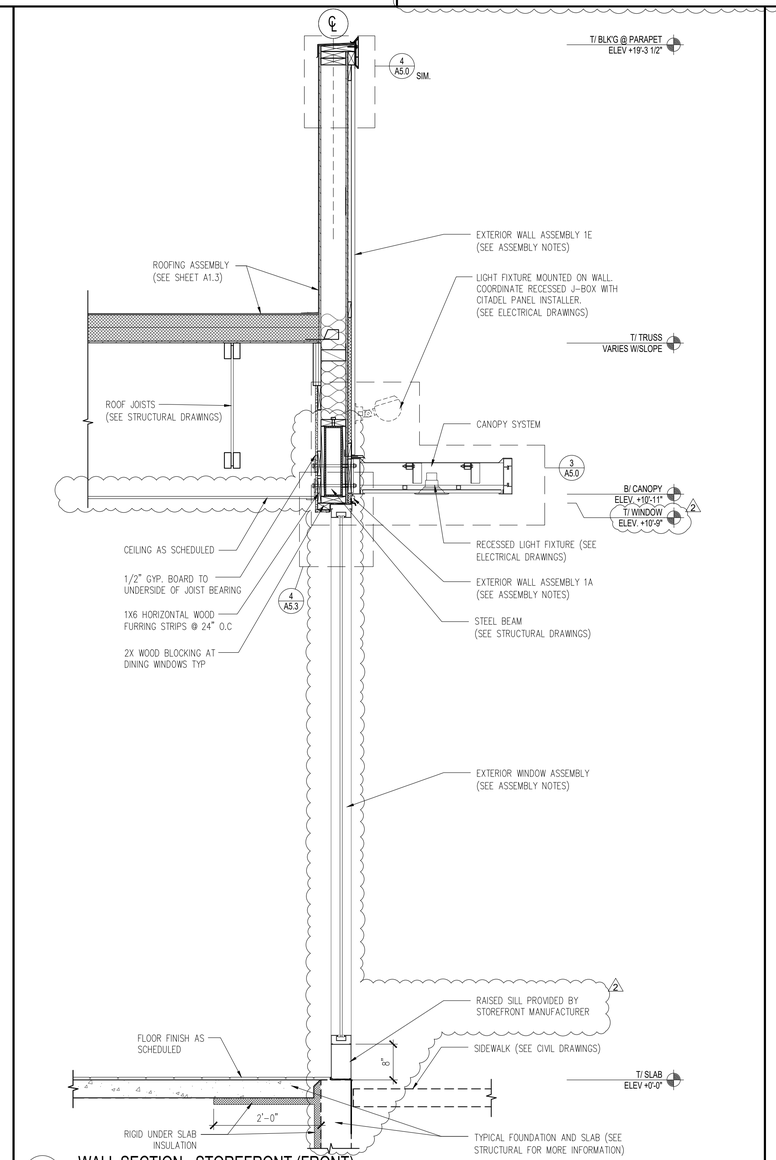

7 WALL SECTION - STOREFRONT (FRONT)

3/4" = 1'-0"

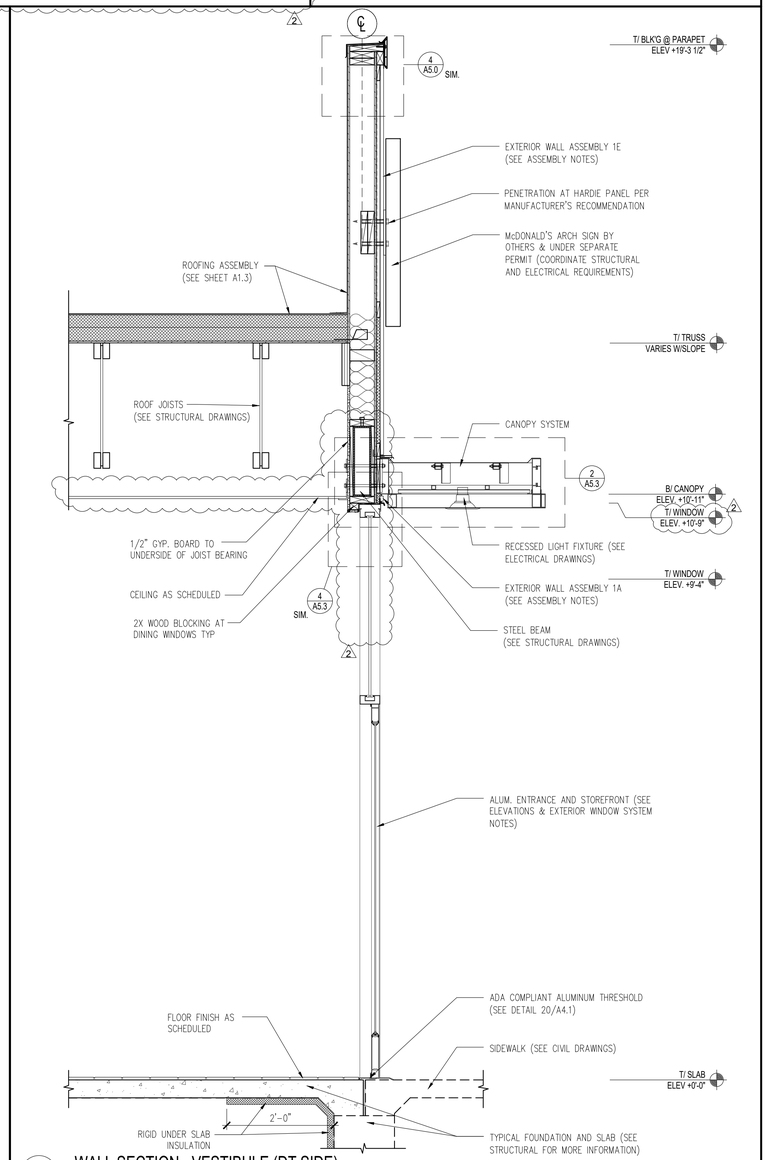

8 WALL SECTION - VESTIBULE (DT SIDE)

3/4" = 1'-0"

LINGLE DESIGN GROUP INC
158 WEST MAIN STREET
LENA, IL 61048
815.369.9155
1764 BLAKE ST
DENVER, CO 8020
303.974.5873
WWW.LINGLEDESIGN.COM

© ALL DRAWINGS AND WRITTEN MATERIAL CONTAINED HEREIN ARE THE PROPERTY OF THE LINGLE DESIGN GROUP, INC. THEY MAY NOT BE REVISED, COPIED, REUSED, OR DISCLOSED IN ANY MANNER WITHOUT WRITTEN AUTHORIZATION FROM THE ARCHITECT.

CARL LINGLE LICENSED 7997 KANSAS ARCHITECT

04-08-26

STATE ID: 150404
PROJECT #: 26-028
NATIONAL #: 44655
DRAWN BY: CR
CHECKED BY: JK

DATE:
04/08/26 - PERMIT / BID SET

REVISIONS
1 05/07/26 - QC COMMENTS/ADA UPDATE
2 06/22/26 - CITY COMMENTS / DECOR

CLIENT
McDonald's USA, LLC

PROTOTYPE
BB20 4584 WW-HB
ISSUE DATE 02/25

ADDRESS
707 1/2 METROPOLITAN AVE
LEAVENWORTH, KS 66048

SHEET TITLE
WALL SECTIONS AND DETAILS

SHEET NUMBER:
A5.3

DOOR SCHEDULE

#	DOOR MATERIAL	SIZE	TYPE	FINISH	FRAME MATL	SIZE	FINISH
1	ALUM.	3'-0"x7'-0"x1 3/4"	A	MFR. – SEE EXTERIOR WINDOW ASSEMBLY, 5/A5.0	ALUM.	(NOTE 5)	MFR. – SEE EXTERIOR WINDOW ASSEMBLY, 5/A5.0
2	ALUM.	3'-0"x7'-0"x1 3/4"	A1	MFR. – SEE EXTERIOR WINDOW ASSEMBLY, 5/A5.0	ALUM.	(NOTE 5)	MFR. – SEE EXTERIOR WINDOW ASSEMBLY, 5/A5.0
2A	ALUM.	3'-0"x7'-0"x1 3/4"	A1	MFR. – SEE EXTERIOR WINDOW ASSEMBLY, 5/A5.0	ALUM.	(NOTE 5)	MFR. – SEE EXTERIOR WINDOW ASSEMBLY, 5/A5.0
3	H.M.	4'-0"x7'-0"x1 3/4"	B	PAINT INTERIOR BENJAMIN MOORE 2121-10 "GRAY" SEE EXTERIOR ELEVATIONS FOR EXTERIOR PAINT COLOR	H.M.	2"JAMB & 4"HEAD	PAINT INTERIOR BENJAMIN MOORE 2121-10 "GRAY" SEE EXTERIOR ELEVATIONS FOR EXTERIOR PAINT COLOR
3A	H.M.	3'-0"x7'-0"x1 3/4" 2'-0"x7'-0"x1 3/4"	G		H.M.	2"JAMB & 4"HEAD	
3B	H.M.	4'-0"x7'-0"x1 3/4"	N		H.M.	2"JAMB & 4"HEAD	
4	H.M.	3'-0"x7'-0"x1 3/4"	B		H.M.	2"JAMB & 4"HEAD	
5	S.C. WOOD W/ LAM.	3'-0"x6'-8"x1 3/4"	C	LUNA: INT. LAMTECH 1540 PR "ONTARIO OAK", EXT. LAMTECH 1467 MT "LINEAL OAK" RT 66: INT. LAMTECH 1540 PR "ONTARIO OAK", EXT. WILSONART D90-60 "NORTH SEA" RAY: INT. LAMTECH 1540 PR "ONTARIO OAK", EXT. LAMTECH 2255 MT "IRON"	H.M.	2"JAMB & HEAD	LUNA: INT. BENJAMIN MOORE 2134-30 "IRON MOUNTAIN", EXT. BENJAMIN MOORE 2121-10 "GRAY" RT. 66: INT. BENJAMIN MOORE 2121-10 "GRAY", EXT. BENJAMIN MOORE 2134-40 "WHALE GRAY" RAY: INT. BENJAMIN MOORE 2134-30 "IRON MOUNTAIN", EXT. BENJAMIN MOORE 1631 "MIDNIGHT OIL"
6	S.C. WOOD W/ LAM.	3'-0"x4'-8"x1 3/4"	D	LUNA: INT. LAMTECH 1540 PR "ONTARIO OAK", EXT. LAMTECH 1467 MT "LINEAL OAK" RT 66: INT. & EXT. LAMTECH 1540 PR "ONTARIO OAK" RAY: INT. & EXT. LAMTECH 1540 PR "ONTARIO OAK"	H.M.	2"JAMB & HEAD	LUNA: INT. & EXT. BENJAMIN MOORE 2134-30 "IRON MOUNTAIN" RT. 66: INT. & EXT. BENJAMIN MOORE 2121-10 "GRAY" RAY: INT. & EXT. BENJAMIN MOORE 2134-30 "IRON MOUNTAIN"
6A	S.C. WOOD W/ LAM.	2'-6"x4'-8"x1 3/4"	D		H.M.	2"JAMB & HEAD	
7	S.C. WOOD W/ LAM.	3'-0"x7'-0"x1 3/4"	C		H.M.	2"JAMB & HEAD	
8A	S.C. WOOD W/ LAM.	(2) 1'-2"x8'-0"x1 3/4"	E	INT. & EXT. WILSONART D92-60 "DOVE GREY"	H.M.	2"JAMB & HEAD	INT. & EXT. BENJAMIN MOORE 2121-10 GRAY
8B	S.C. WOOD W/ LAM.	(2) 1'-2"x8'-0"x1 3/4"	M	INT. & EXT. WILSONART D92-60 "DOVE GREY"	H.M.	2"JAMB & HEAD	INT. & EXT. BENJAMIN MOORE 2121-10 GRAY
9	INSULATED METAL	3'-0"x6'-6"x4"	K	MFR.	N/A	N/A	MFR.
9A	INSULATED METAL	4'-0"x6'-6"x4"	K	MFR.	N/A	N/A	MFR.
10	H.M.	3'-0"x7'-0"x1 3/4"	F	LUNA: INT. & EXT. BENJAMIN MOORE 2121-10 "GRAY" RT. 66: INT. BENJAMIN MOORE 2121-10 "GRAY", EXT. BENJAMIN MOORE 2134-40 "WHALE GRAY" RAY: INT. BENJAMIN MOORE 2121-10 "GRAY", EXT. BENJAMIN MOORE 1117 "GUESTHOUSE"	H.M.	2"JAMB & HEAD	LUNA: INT. & EXT. BENJAMIN MOORE 2121-10 "GRAY" RT. 66: INT. BENJAMIN MOORE 2121-10 "GRAY", EXT. BENJAMIN MOORE 2134-40 "WHALE GRAY" RAY: INT. BENJAMIN MOORE 2121-10 "GRAY", EXT. BENJAMIN MOORE 1117 "GUESTHOUSE"
15	H.M.	3'-0"x7'-0"x1 3/4"	J	PAINT INTERIOR BENJAMIN MOORE 2121-10 "GRAY" SEE EXTERIOR ELEVATIONS FOR EXTERIOR PAINT COLOR	H.M.	2"JAMB & 4"HEAD	PAINT INTERIOR BENJAMIN MOORE 2121-10 "GRAY" SEE EXTERIOR ELEVATIONS FOR EXTERIOR PAINT COLOR
16	S.C. WOOD W/ LAM.	3'-0"x7'-0"x1 3/4"	C	LUNA: INT. LAMTECH 1557 PR "SEASON ASH", EXT. WILSONART D92-60 "DOVE GREY" RT 66: INT. & EXT. LAMTECH 1540 PR "ONTARIO OAK" RAY: INT. & EXT. LAMTECH 1540 PR "ONTARIO OAK"	H.M.	2"JAMB & HEAD	LUNA: INT. BENJAMIN MOORE 2134-30 "IRON MOUNTAIN", EXT. BENJAMIN MOORE 2121-10 "GRAY" RT. 66: INT. & EXT. BENJAMIN MOORE 2121-10 "GRAY" RAY: INT. BENJAMIN MOORE 2134-30 "IRON MOUNTAIN", EXT. BENJAMIN MOORE 2121-10 "GRAY"

* G.C. TO VERIFY ALL LUNA, RT. 66 AND RAY DECOR FINISHES WITH DECOR DRAWINGS.

GENERAL DOOR NOTES

1. ALL EXIT DOORS SHALL BE KEYLESS IN THE DIRECTION OF EGRESS.
2. THE OPENING FORCE OF ALL EXT. PUSH/PULL DOORS SHALL NOT EXCEED 8 1/2 LBS.
3. THE OPENING FORCE OF ALL INTERIOR PUSH/PULL DOORS SHALL NOT EXCEED 5 LBS.
4. PROVIDE PANIC HARDWARE FOR ALL EXTERIOR DOORS AS NOTED ON THE DOOR SCHEDULE.
5. ALL DOOR HARDWARE SHALL NOT REQUIRE TIGHT GRASPING, TIGHT PINCHING OR TWISTING OF THE WRIST TO OPERATE.
6. GC TO INSTALL ACCESSIBILITY DOOR SIGNS WHERE REQ'D BY LOCAL CODES – SEE GENERAL NOTE 6, SHEET A1.0
7. ALARM CONTACT SWITCHES SHALL BE RECESSED INTO THE TOP OF THE DOOR & HOLLOW METAL FRAME ABOVE.
8. DOORS, DOOR FRAMES, & HARDWARE FOR DOORS 3, 3A, 3B, 4, 5, 6, 6A, 7, 8A, 8B, 10, 15 & 16 SUPPLIED BY: UNIVERSAL MANUFACTURING 1-800-821-1414.
9. DOOR 9 & 9A SUPPLIED BY FREEZER/COOLER MANUFACTURER
10. SEE ELEVATIONS AND WALL SECTIONS.
11. DOOR 8A & 8B – 1" UNDERCUT FOR MAKE UP AIR.
12. DOORS 3, 3A, 4 & 15 TO HAVE MAXIMUM U VALUE = 0.61
13. ALL INTERIOR SOLID CORE WOOD DOORS TO HAVE A LAMINATED FINISH AND PAINTED FRAMES.

DOOR TYPES

SCALE: 1/4" = 1'-0"

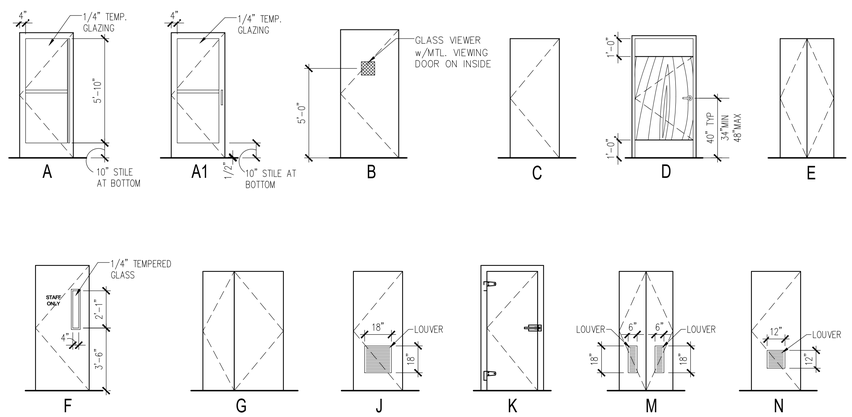

HARDWARE TYPES

DOOR #1 – ENTRY DOOR
1. 1 EA CLOSER LCN 4021 x 18
2. 3 EA HINGES OFFSET PIVOT ANSI –A–156.4 GRADE 1; PROVIDE EXPOSED PARTS OF CAST ALUMINUM ALLOY, AS SUPPLIED BY DOOR MANUFACTURER.
3. 1 EA PULL HANDLE ROCKWOOD MFG. MODEL: RM3311. SIZE: 1–1/4" DIA. CTC: 5'–10". FINISH: BLACK POWDER COAT (BPC). OFFSET MOUNTING: TYPE 1XHD – THRU BOLT HEAVY DUTY ⚠1
4. 1 EA PANIC HARDWARE ADAMS RITE MFG. CO. 8800 SERIES WITH OUTSIDE CYLINDER (FINISH TO MATCH STOREFRONT DOOR)
5. 1 EA THRESHOLD NATIONAL GUARD PRODUCTS, INC. SADDLE TYPE THRESHOLD 325, 36" WIDE x 1/2" RISE (ADA ACCESSIBLE).
6. 1 EA WEATHER STRIPPING: PROVIDE COMPRESSION WEATHER STRIPPING AGAINST FIXED STOPS. AT OTHER EDGES PROVIDE SLIDING WEATHER STRIPPING RETAINED IN ADJUSTABLE STRIP MORTISED INTO DOOR EDGE. PROVIDE EPDM OR VINYL GASKET WEATHER STRIPPING IN BOTTOM DOOR RAIL ADJUSTABLE FOR CONTACT W/ THRESHOLD.
7. 1 EA SIGN MOUNT ONTO DOOR, TO READ "THIS DOOR MUST REMAIN UNLOCKED WHENEVER THE BUILDING IS OCCUPIED/DURING BUSINESS HOURS."

DOOR #2 – NON–DT VESTIBULE
1. 1 EA CLOSER LCN 4041 x 18
2. 3 EA HINGES OFFSET PIVOT ANSI –A–156.4 GRADE 1; BY DOOR MANUFACTURER.
3. 1 EA PUSH/PULL HANDLE HAGER PUSH/PULL SET 164D/V/B.

DOOR #2A – DT VESTIBULE
1. 1 EA CLOSER LCN 4041 x 18
2. 3 EA HINGES OFFSET PIVOT ANSI –A–156.4 GRADE 1; BY DOOR MANUFACTURER.
3. 1 EA PUSH/PULL HANDLE HAGER PUSH/PULL SET 164D/V/B.
4. 1 EA PANIC HARDWARE ADAMS RITE MFG. CO. 8800 SERIES WITH OUTSIDE CYLINDER (FINISH TO MATCH STOREFRONT DOOR)

DOOR #3 – STORAGE DELIVERY
1. 1 EA HINGE 780–112HD 83" ALUM HAGER
2. 1 EA CLOSER 4111 H–CUSH ALUM LCN
3. 1 EA PANIC 9975EO–LD 48" SP28 V.DUPRIN
4. 1 EA TRIM 990DT US26D V.DUPRIN
5. 1 EA ALARM LOCK PG21MSS ALARM
6. 1 EA LOCKGUARD CLP110 US32D DON–JO
7. 1 EA WTH/STP160V 48 X 84 N.GUARD
8. 1 EA SWEEP 101VA 48" N.GUARD
9. 1 EA VIEW FRAME LVGLFMD 9 X 9 DKB W/FLAP ON INSIDE N.GUARD
10. 1 EA MORTISE CYL HOUSING 7PIN SFIC 626
11. 1 EA 7 PIN CONSTRUCTION CORE FOR ABOVE 626
12. 1 EA CONTROL KEY FOR ABOVE
13. SEE A1.0 FOR 3/16" DIAMOND PLATE THRESHOLD BY DIAMOND PLATE PROTECTION CONTRACTOR
14. SEE A1.0 FOR 1/8" DIAMOND KICK PLATE SCOPE BY DIAMOND PLATE PROTECTION CONTRACTOR
15. (OPTIONAL) 1 EA THRESHOLD 325HD 48" N.GUARD

DOOR #3A – FREEZER DELIVERY (DOUBLE DOOR)
1. 2 EA CONTINUOUS HINGE A210HDC 83
2. 1 EA DEADBOLT B661P 626 SCHLAGE
3. 1 EA LATCH PROTECTOR CLP–110 630
4. 1 EA PULL H3E US28 HAGER
5. 1 EA GASKETING 160V 1 x 60" 2 x 84" SMS–TEKS 6 x 3/4"
6. 1 EA DRIP CAP 16 A 64" SMS–TEKS 6 x 3/4"
7. 2 EA SURFACE BOLT 2750 8" US26D
8. 1 EA SWEEP 101VA 24" N.GUARD
9. 1 EA SWEEP 101VA 36" N.GUARD
10. 1 EA OVERHEAD DOOR HOLDER 60–17–CON–SZ1–US32D–SX1N HAGER
11. 1 EA OVERHEAD DOOR HOLDER 60–17–CON–SZ2–US32D–SX1N HAGER
12. SEE A1.0 FOR 3/16" DIAMOND PLATE THRESHOLD BY DIAMOND PLATE PROTECTION CONTRACTOR
13. SEE A1.0 FOR 1/8" DIAMOND KICK PLATE SCOPE BY DIAMOND PLATE PROTECTION CONTRACTOR
14. (OPTIONAL) 1 EA THRESHOLD 325HD 60" N.GUARD

DOOR #3B – STORAGE SHED
1. 1 EA HINGE 780–112HD 83" ALUM HAGER
2. 1 EA DEADBOLT B661P 626 SCHLAGE
3. 1 EA PULL H3E US28 HAGER
4. 1 EA LOCKGUARD CLP110 US32D DON–JO
5. 1 EA TREADPLATE 24 X 46 UMCO
6. 1 EA WEATHER STRIPPING 160V 48 X 84 N.GUARD
7. 1 EA THRESHOLD 325HD 48" N.GUARD
8. 1 EA SWEEP 101VA 48" N.GUARD
9. 1 EA SEC. LOUVER LVRSG–3 DKB 12 X 12 N.GUARD

DOOR #4 – REAR EXIT
1. 1 EA HINGE 780–112HD 83" ALUM HAGER
2. 1 EA CLOSER 4111 H–CUSH ALUM LCN
3. 1 EA PANIC 9975EO–LD 36" SP28 V.DUPRIN
4. 1 EA TRIM 990DT US26D V.DUPRIN
5. 1 EA ALARM LOCK PG21MSS ALARM
6. 1 EA LOCKGUARD CLP110 US32D DON–JO
7. 1 EA TREADPLATE 24 X 34 UMCO
8. 1 EA WEATHER STRIPPING 160V 36 X 84 N.GUARD
9. 1 EA THRESHOLD 325HD 36" N.GUARD
10. 1 EA SWEEP 101VA 36" N.GUARD
11. 1 EA VIEW FRAME LVGLFMD 9 X 9 DKB W/FLAP ON INSIDE N.GUARD
12. 1 EA MORTISE CYL HOUSING 7PIN SFIC 626
13. 1 EA 7 PIN CONSTRUCTION CORE FOR ABOVE 626
14. 1 EA CONTROL KEY FOR ABOVE

DOOR #5 – RESTROOM ENTRY
1. 3 EA HINGE BB1279 4 ½ X 4 ½ US26D HAGER
2. 1 EA CLOSER LDPA4031 SNB ALUM LCN
3. 1 EA PUSH PLATE 30S 4 X 32 US32D 40"AFF MOUNTED TO CENTER OF PLATE
4. 1 EA PULL PLATE LADDER PULL HANDLE WITH DECORATIVE FIXING, 32"L 1"DIA #S–32–1000 – UMCO 32D. 40" AFF MOUNTED CENTER OF PULL
   ALT. OPTION: 1 EA PULLPLATE SANITGRASP
   ALT. OPTION: 1 EA PULL–PUSH BUTTON CYLINDRICAL LOCK – TRILOGY DL2700 US26D CHROME
5. 2 EA KICKPLATE 190S 8 X 34 US32D HAGER
6. 1 EA DOOR STOP 236W US32D HAGER
7. 1 EA FINGER GRD MKIA PUSH SIDE BRN F.SAFE
8. 1 EA FINGER GRD MKIB PULL SIDE BRN F.SAFE
9. 1 EA STEPNPULL PULL SIDE (OPTIONAL)

DOOR #6 – ADA STALL
1. 2 EA HINGE 1250 4 ½ X 4 ½ US26D HAGER
2. 1 EA HINGE BB1279 4 ½ X 4 ½ US26D HAGER
3. 1 EA DEADBOLT B571 X 10–087 214EE X 12 X 291 X 626 SCHLAGE
4. 2 EA BACK TO BACK LADDER PULL HANDLE, 16"L, 1"DIA #S–16–1000 BTB–UMCO 32D MOUNTED 6" FROM EDGE OF DOOR TO CENTER OF SCREWS – 28⅜" MOUNTED 28⅜" FROM TOP OF DOOR TO C/L OF PULL
5. 1 EA ROBE HOOK 917 BRADLEY
6. 1 EA DOOR STOP 236W US32D HAGER

DOOR #6A – STANDARD STALL
1. 2 EA HINGE 1250 4 ½ X 4 ½ US26D HAGER
2. 1 EA HINGE BB1279 4 ½ X 4 ½ US26D HAGER
3. 1 EA DEADBOLT B571 X 10–087 214EE X 12 X 291 X 626 SCHLAGE
4. 2 EA BACK TO BACK LADDER PULL HANDLE, 16"L, 1"DIA #S–16–1000 BTB–UMCO 32D MOUNTED 6" FROM EDGE OF DOOR TO CENTER OF SCREWS – MOUNTED 28⅜" FROM TOP OF DOOR TO C/L OF PULL
5. 1 EA ROBE HOOK 917 BRADLEY
6. 1 EA DOOR STOP 236W US32D HAGER

DOOR #7 – DINING ROOM JANITORS CLOSET
1. 1. 3 EA HINGE BB1279 4 ½ X 4 ½ US26D HAGER
2. 1 EA LOCK ND80PD RHO 626 SCHLAGE

DOOR #8A – COMPUTER CLOSET
1. 8 EA HINGE BB1279 4 ½ X 4 ½ US26D HAGER
2. 1 EA LOCK ND80PD RHO 626 SCHLAGE
3. 2 EA FLUSH BOLT 283D US26D HAGER

DOOR #8B – COMPUTER CLOSET
1. 8 EA HINGE BB1279 4 ½ X 4 ½ US26D HAGER
2. 1 EA LOCK ND80PD RHO 626 SCHLAGE
3. 2 EA FLUSH BOLT 283D US26D HAGER
4. 2 EA LOUVER L–700–RX 6 X 18 N.GUARD

DOOR #9 & 9A – COOLER
1. ALL DOOR HARDWARE FOR THE REFRIGERATED COOLER / FREEZER SHALL BE PROVIDED BY THE MANUFACTURER.
   MANUFACTURER:
   KOLPAK @ HY 641 N. McCORKLE PARK RD
   PARSONS, TN 38363
   PHONE: 800–344–4675
   HARDWARE PROVIDED:
   1. MAGNETIC PERIMETER DOOR GASKET
   2. THRESHOLD REINFORCED PLASTIC (FRP)
   3. POSI–SEAL DOOR CLOSURE
   4. STATIONARY CHROME DOOR PULL HANDLE
   5. INTERIOR SAFETY RELEASE HANDLE
   6. HINGES – BRUSHED CHROME CAST ALLOY
2. SEE A1.0 FOR 3/16" DIAMOND PLATE THRESHOLD BY DIAMOND PLATE PROTECTION CONTRACTOR
3. SEE A1.0 FOR 1/8" DIAMOND KICK PLATE SCOPE BY DIAMOND PLATE PROTECTION CONTRACTOR

DOOR #10 – CREW BDAP DOOR #10
1. 1 EA HINGE 780–112HD 83" ALUM HAGER
2. 1 EA CLOSER 1461 RW/PA ALUM LCN
3. 1 EA PANIC 9975EO–LD 36" SP28 V.DUPRIN
4. 1 EA TRIM 990DT US26D V.DUPRIN
5. 1 EA ELEC STRIKE 6211 24V DC FSE US32D SCHLAGE
6. 1 EA PWR SUPPLY PS902 SCHLAGE
7. 1 EA ANNUNCIATOR BSV–24P SURFACE MOUNTED
8. 3 EA PUSH BUTTON 621–BK–DA HDP 626 SCHLAGE
9. 1 EA PUSH BUTTON 621–RD–DA HDP 626 SCHLAGE
10. 1 EA HORN WITH STROBE 1910S SCHLAGE
11. 1 EA GLASS 5 X 26 X ¼ UMCO
12. 1 EA VIEW FRAME LFRA100 6 X 27 DKB N.GUARD

DOOR #15 CO2
1. 1 EA HINGE 780–112HD 83" ALUM HAGER
2. 1 EA LOCK ND80PD RHO 626 SCHLAGE
3. 1 EA LOCK GUARD CLP110 US32D DON JO
4. 1 EA WEATHER STRIPPING 160V 36 X 84 N.GUARD
5. 1 EA THRESHOLD 425E 36" N.GUARD
6. 1 EA SWEEP 101VA 36" N.GUARD
7. 1 EA SEC. LOUVER LVRSG–3 DKB 18 X 18 N.GUARD

DOOR #16 CREW ROOM
1. 3 EA HINGE BB1279 4 ½ X 4 ½ US26D HAGER
2. 1 EA ND60PD RHO VESTIBULE LEVER LOCK 626 SCHLAGE

WINDOW TYPES

SCALE: 1/4" = 1'-0"

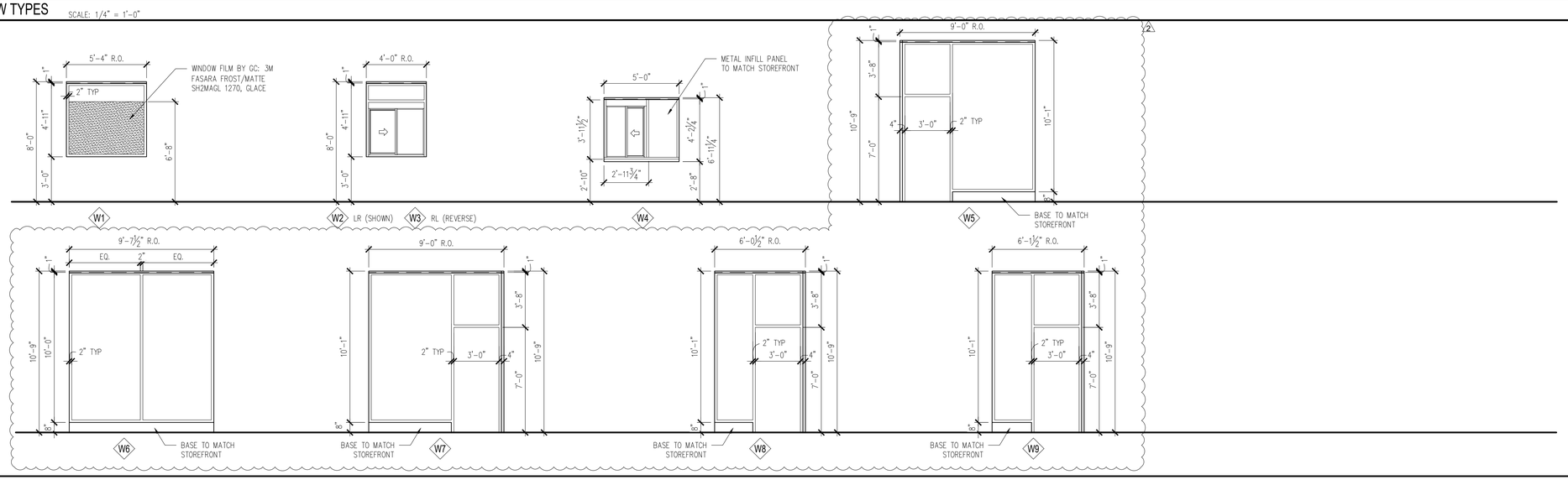

EXTERIOR WINDOW ASSEMBLY
(STOREFRONT & ENTRANCE SYSTEM)
FOR GLAZING & FRAME REQUIREMENTS: SEE EXTERIOR WINDOW ASSEMBLY, 5/A5.0

INTERIOR WINDOW ASSEMBLY
(STOREFRONT & ENTRANCE SYSTEM)
1. EXTRA DARK BRONZE ALUMINUM FRAME, THERMALLY BROKEN WITH HEAD RECEIVER CHANNEL.
2. 1/4" CLEAR TEMPERED GLAZING
3. 1/2" CORIAN SILL EACH SIDE

LINGLE DESIGN GROUP INC
158 WEST MAIN STREET
LENA, IL 61048
815.369.9155
1764 BLAKE ST
DENVER, CO 8020
303.974.5873
WWW.LINGLEDESIGN.COM

© ALL DRAWINGS AND WRITTEN MATERIAL CONTAINED HEREIN ARE THE PROPERTY OF THE LINGLE DESIGN GROUP, INC. THEY MAY NOT BE REVISED, COPIED, REUSED, OR DISCLOSED IN ANY MANNER WITHOUT WRITTEN AUTHORIZATION FROM THE ARCHITECT.

CARL LINGLE LICENSED 7997 KANSAS ARCHITECT

04-08-26

STATE ID: 150404
PROJECT #: 26-028
NATIONAL #: 44655
DRAWN BY: CR
CHECKED BY: JK

DATE:
04/08/26 - PERMIT / BID SET

REVISIONS
1. 05/07/26 - QC COMMENTS/ADA UPDATE
2. 06/22/26 - CITY COMMENTS / DECOR

CLIENT
McDonald's USA, LLC

PROTOTYPE
BB20 4584 WW-HB
ISSUE DATE 02/25

ADDRESS
707 1/2 METROPOLITAN AVE
LEAVENWORTH, KS 66048

SHEET TITLE
DOOR & WINDOW SCHEDULES

SHEET NUMBER:
A6.0

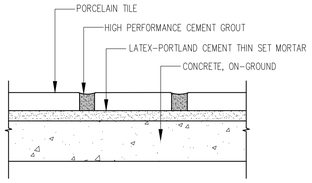

1 DINING ROOM AND RESTROOM FLOORS OVER CONCRETE

N.T.S.

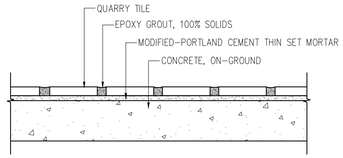

2 KITCHEN/ SUPPORT FLOORS OVER CONCRETE

N.T.S.

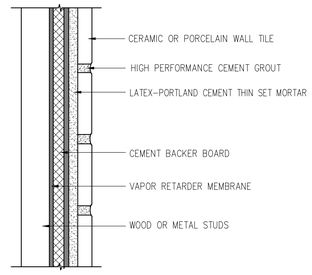

3 DINING ROOM INTERIOR WALLS OVER WOOD OR METAL STUDS

N.T.S.

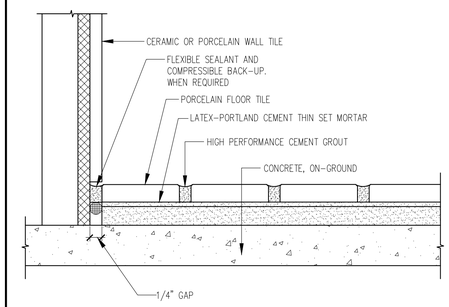

4 DINING ROOM PERIMETER JOINT

N.T.S.

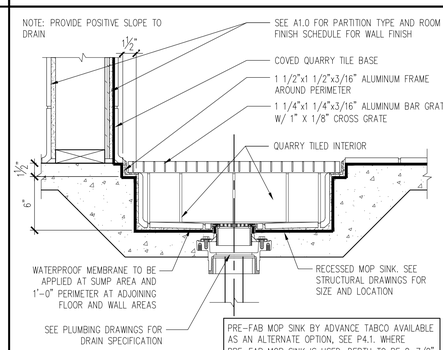

8 MOP SINK

1 1/2" = 1'-0"

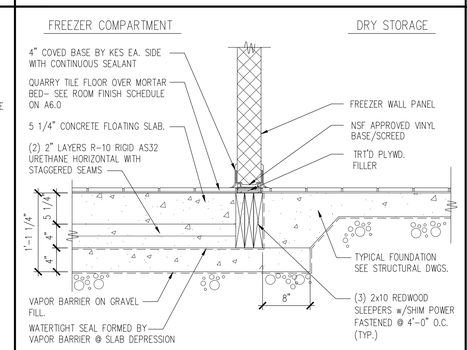

9 FREEZER FLOOR DETAIL @ INT. WALL

1" = 1'-0"

NOTE:
1. BUTT FINISH & TRIM PIECES TO S.S. ENDCAP & CORNER GUARD.
2. CORNER GUARDS & END CAPS TYPICAL AT KITCHEN, SUPPORT ROOM, & SELF SERVE BEVERAGE AREAS
3. SEE "CG" KEY NOTE ON A1.0

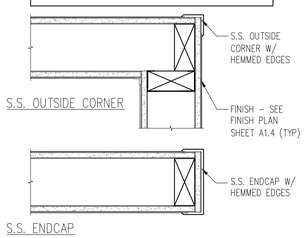

10 STAINLESS STEEL DETAILS

1 1/2" = 1'-0"

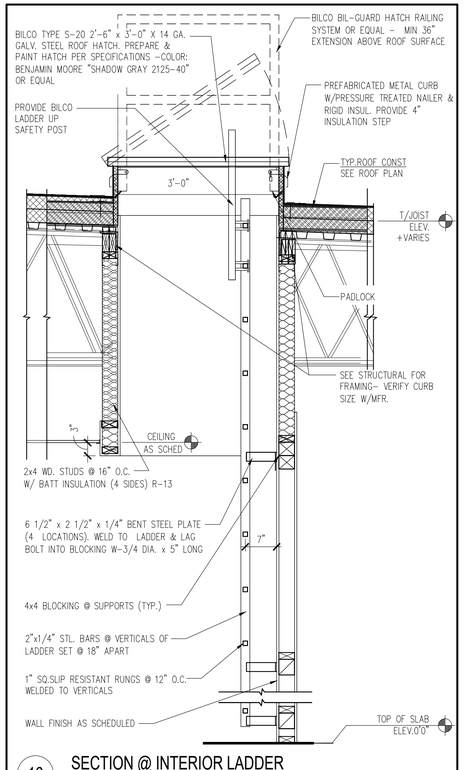

16 SECTION @ INTERIOR LADDER

3/4" = 1'-0"

NOTE:
SEE FINISH SCHEDULES & DETAILS ON SHEET A6.1 FOR BASE INFORMATION. STEP BASE MATERIAL W/RAISED SLAB

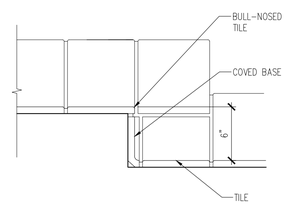

13 DETAIL RAISED SLAB

1 1/2" = 1'-0"

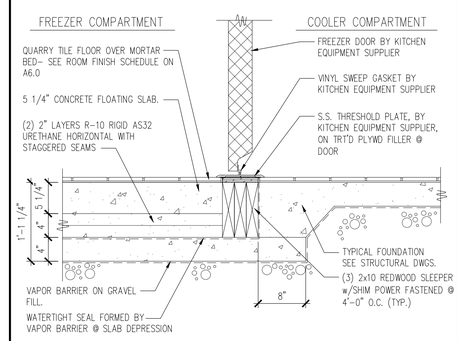

14 FREEZER FLOOR DETAIL @ DOOR

1" = 1'-0"

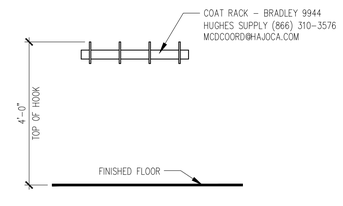

19 WALL MOUNTED COAT HOOKS (CREW ROOM & BDAP)

1/2" = 1'-0"

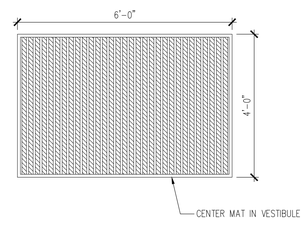

NON-DRIVE THRU - PEDI MAT

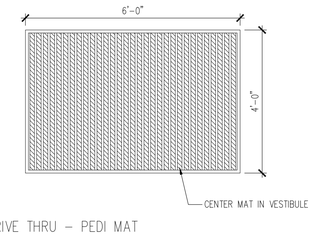

DRIVE THRU - PEDI MAT

PEDIMAT BY CONSTRUCTION SPECIALTIES
- RAIL/FRAME FINISH: CLEAR ANODIZED
- CARPET INSERT: #7325 WROUGHT IRON
CONTACT: NATIONAL ACCOUNTS DIVISION
PHONE: (888) 424-6287
FAX: (908) 849-4295
NATIONALACCOUNTS@C-SCROUP.COM

OPTIONAL: VERIFY WITH MCDONALD'S CONSTRUCTION MANAGER

20 PEDIMAT (OPTIONAL)

1/2" = 1'-0"

LINGLE DESIGN GROUP INC
158 WEST MAIN STREET
LENA, IL 61048
815.369.9155
1764 BLAKE ST
DENVER, CO 8020
303.974.5873
WWW.LINGLEDESIGN.COM

© ALL DRAWINGS AND WRITTEN MATERIAL CONTAINED HEREIN ARE THE PROPERTY OF THE LINGLE DESIGN GROUP, INC. THEY MAY NOT BE REVISED, COPIED, REUSED, OR DISCLOSED IN ANY MANNER WITHOUT WRITTEN AUTHORIZATION FROM THE ARCHITECT.

CARL LINGLE LICENSED 7997 KANSAS ARCHITECT

04-08-26

STATE ID: 150404
PROJECT #: 26-028
NATIONAL #: 44655
DRAWN BY: CR
CHECKED BY: JK

DATE:
04/08/26 - PERMIT / BID SET

REVISIONS
1 05/07/26 - QC COMMENTS/ADA UPDATE
2 06/22/26 - CITY COMMENTS / DECOR

CLIENT
McDonald's USA, LLC

PROTOTYPE
BB20 4584 WW-HB
ISSUE DATE 02/25

ADDRESS
707 1/2 METROPOLITAN AVE
LEAVENWORTH, KS 66048

SHEET TITLE
DETAILS

SHEET NUMBER:
A6.1

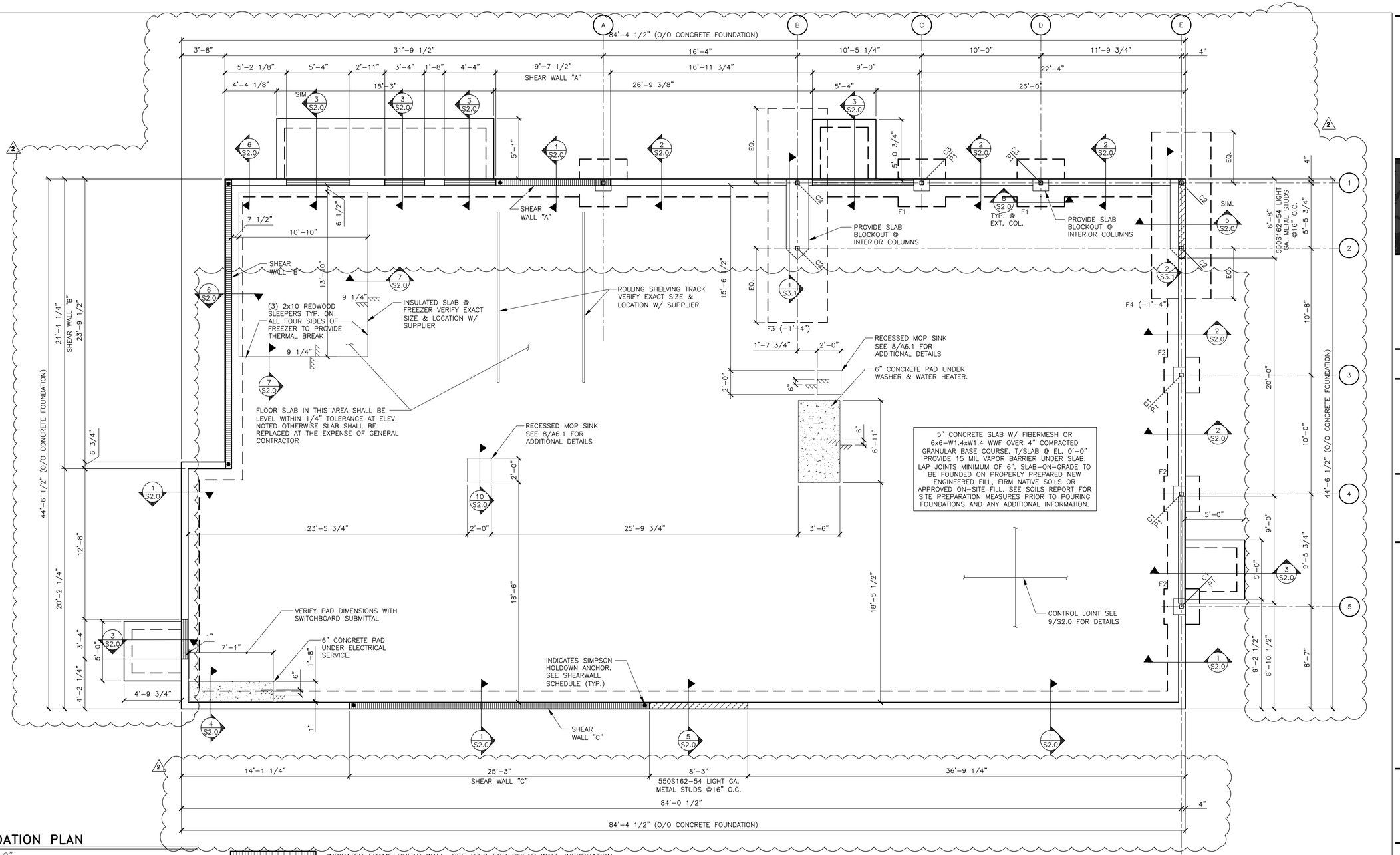

1 FOUNDATION PLAN

S1.0 1/4"=1'-0"

INDICATES FRAME SHEAR WALL. SEE S3.2 FOR SHEAR WALL INFORMATION

INDICATES DEPRESSION IN FOUNDATION WALL @ DOORS. SEE 3/S2.0 FOR THRESHOLD DETAILS.

INDICATES METAL STUD FRAME WALL. SEE 5/S2.0 FOR DETAILS.

NOTES:

1. TOP OF FOOTING @ EL. (-2'-8") UNLESS NOTED OTHERWISE.
   1a. BOTTOM OF FOOTINGS TO BE A MINIMUM OF 36" BELOW GRADE FOR FROSTLINE.
2. TOP OF PIER @ EL. (-0'-8") UNLESS NOTED OTHERWISE.
3. SEE SHEET S4.0 FOR GENERAL STRUCTURAL NOTES.
4. PROVIDE POSITIVE DRAINAGE TO ALL FLOOR DRAINS/SINKS (MIN 6") BEYOND DRAIN) SEE PLUMBING DRAWINGS FOR EXACT LOCATIONS
5. SEE SHEET S2.0 FOR TYPICAL CORNER BAR DETAILS.
6. MINIMUM REQUIREMENTS FOR SILL PLATE CONNECTION TO FOUNDATION:
   MINIMUM # OF BOLTS = 2 PER PIECE OF SILL
   MAXIMUM DISTANCE FROM END OF SILL TO ANCHOR = 12"
   MINIMUM DISTANCE FROM END OF SILL TO ANCHOR = 4"
7. WHERE SILL PLATES ARE NOT CONTINUOUS AT ALL LOCATIONS EXCEPT SHEAR WALLS, USE SIMPSON "RPS22Z" TIE FOR NOTCH < 5 1/2", USE SIMPSON "RPS28Z" FOR NOTCH < 12", W/ 16d NAILS INTO SILL PLATE ENDS. (MAX. SPACING BETWEEN STUDS = 16" O.C.)
8. WHERE SILL PLATES ARE NOT CONTINUOUS AT SHEAR WALLS, CONTACT ENGINEER OF RECORD FOR RESPONSE.

FOOTING SCHEDULE

MARK	SIZE	REINFORCING
F1	4'-0"x4'-0"x1'-0"	5-#5 E.W.-B.
F2	3'-0"x3'-0"x1'-0"	4-#5 E.W.-B.
F3	5'-0"x18'-0"x3'-0"	7-#7 L.W.-T&B (14 TOTAL) #6 @ 12" O.C. S.W.-T&B
F4	5'-0"x14'-0"x3'-0"	7-#7 L.W.-T&B (14 TOTAL) #6 @ 12" O.C. S.W.-T&B

PIER SCHEDULE

MARK	SIZE	REINFORCING	REMARKS
P1	1'-4"x1'-4"	4-#6 VERT. #4 TIES @ 12" O.C.	SEE DETAIL 8/S2.0

COLUMN & BASE PLATE SCHEDULE

MARK	MEMBER	SHAPE	BASE PLATE	REMARKS
C1	HSS4x4x1/4	⊕	A	EXTEND TO ROOF
C2	HSS4x4x5/16	⊕	B	BRACED FRAME
C3	HSS4x4x5/16	⊕	A	EXTEND TO ROOF

NOTE: SEE DETAIL 3/S3.1 FOR BASE PLATE AND ANCHOR ROD DETAILS

Lingle Design Group inc
158 West Main Street
Lena, IL 61048
815.369.9155
1764 blake st
denver, CO 8020
303.974.5873
www.lingledesign.com

BRAD YOUNG & ASSOCIATES, INC.
STRUCTURAL ENGINEERING
345 POLLASKY
CLOVIS, CALIFORNIA 93612
PHONE: (559) 323-9600 FAX: (559) 323-9633

© ALL DRAWINGS AND WRITTEN MATERIAL CONTAINED HEREIN ARE THE PROPERTY OF THE LINGLE DESIGN GROUP, INC. THEY MAY NOT BE REVISED, COPIED, REUSED, OR DISCLOSED IN ANY MANNER WITHOUT WRITTEN AUTHORIZATION FROM THE ARCHITECT.

BRADLEY RAE YOUNG LICENSED 158 KANSAS PROFESSIONAL ENGINEER

04-08-26

STATE ID: 150404
BYA PROJECT #: 26203
NATIONAL #: 44655
DRAWN BY: KS
CHECKED BY: TT

DATE:
04/08/26 - PERMIT / BID SET

REVISIONS
1 05/07/26 - QC COMMENTS/ADA UPDATE
2 06/22/26 - CITY COMMENTS / DECOR

CLIENT
McDonald's USA, LLC

PROTOTYPE
BB20 4584 WW-HB
ISSUE DATE 02/25

ADDRESS
707 1/2 METROPOLITAN AVE
LEAVENWORTH, KS 66048

SHEET TITLE
FOUNDATION PLAN

SHEET NUMBER:
S1.0

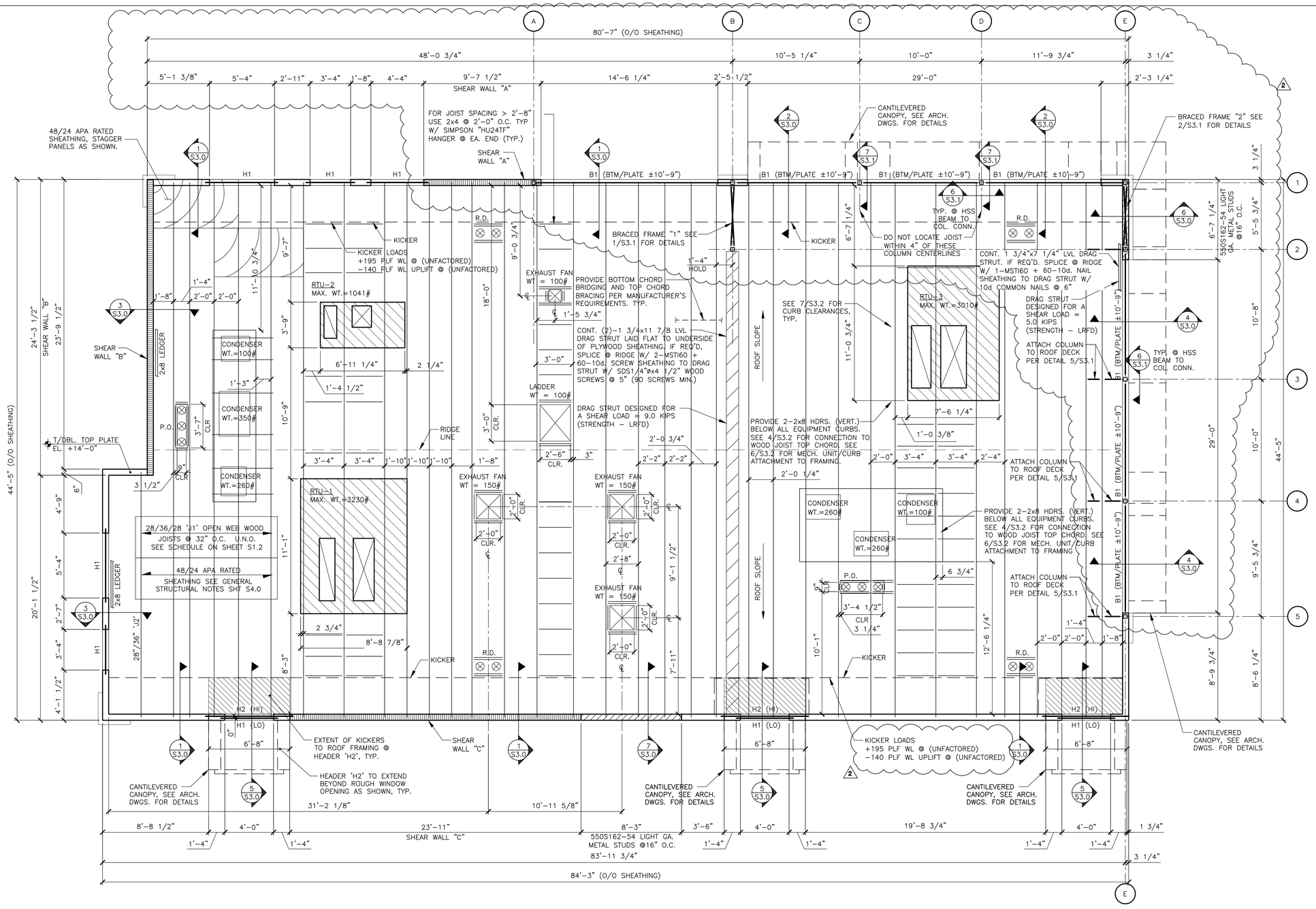

1 S1.2 FRAMING PLAN

1/4"=1'-0"

INDICATES FRAME SHEAR WALL. SEE S3.2 FOR SHEAR WALL INFORMATION

INDICATES METAL STUD FRAME WALL. SEE 7/S3.0 FOR DETAILS.

INDICATES ALLOWABLE RTU PLACEMENT ZONE. RTU VENDOR/SUPPLIER, MODEL AND WEIGHTS SHALL BE VERIFIED PRIOR TO INSTALLATION FOR COORDINATION AND FINAL TRUSS DESIGN VERIFICATION. G.C. TO PROVIDE (2)-2x8 HDRS. BELOW RTU CURBS PER DETAIL 4/S3.2 AND COORDINATE LOCATIONS WITH MANUFACTURER CURB SPECIFICATIONS.

INDICATES RTU SUPPLY/RETURN ROOF DECK PENETRATIONS. G.C. TO PROVIDE (2)-2x8 HDRS. AT PERIMETER OF ALL PENETRATIONS/OPENINGS PER DETAIL 4/S3.2 AND COORDINATE EXTENT WITH MANUFACTURER SPECIFICATIONS.

NOTES:
1. SEE SHEET S4.0 FOR GENERAL STRUCTURAL NOTES.
2. R.D.: ROOF DRAINS
3. P.O.: ROOF CURB PORTAL OPENING - COORDINATE WITH MECHANICAL DRAWINGS.
4. WHEN TOP PLATES ARE NOT CONTINUOUS, USE SIMPSON "RPS22" TIE FOR NOTCH < 5 1/2", USE SIMPSON "RPS28" TIES FOR NOTCH < 12", W/ 16d NAILS INTO TOP PLATE ENDS. (MAX. SPACING BETWEEN STUDS = 16" O.C.)
5. TOP PLATE SPLICE SHALL BE MINIMUM LENGTH OF 48" WITH 2 ROWS (2 1/2" APART) OF 22-16d COMMON NAILS SPACED @ 2" ON CENTER (44 TOTAL).
6. SEE 5/S3.2 FOR SNOW DRIFT DIAGRAM.

NOTE TO CONTRACTOR:
ANY SPRINKLER LINES GREATER THAN 3" DIAMETER SHALL BE VERIFIED BY THE SPRINKLER CONTRACTOR PRIOR TO TRUSS FABRICATION.

BEAM SCHEDULE

MARK	MEMBER	SHAPE	SUPPORT	REMARKS
B1	HSS16x4x1/4 LLV	▯	1/2" END PLATE	SEE DETAIL 6/S3.1

HEADER SCHEDULE

MARK	MEMBER	SHAPE	BEARING
H1	5 1/4"x9 1/2" LVL	⊠	SEE DETAIL 2/S3.2
H2	5 1/4"x11 7/8" LVL	⊠	SEE DETAIL 5/S3.0 & 2/S3.2

JOIST SCHEDULE

MARK	LIVE/ROOF SNOW LOAD	DEPTH	MANUFACTURER & SERIES
J1	20/20	28"/36"/28"	REDBUILT "RED-S"
J2	20/20	28"/36"	REDBUILT "RED-S"

NOTE: SEE DETAIL 4/S3.2 FOR JOIST DETAILS AND SUPPLIER INFORMATIC

Lingle Design Group inc
158 West Main Street
Lena, IL 61048
815.369.9155
1764 blake st
denver, CO 8020
303.974.5873
www.lingledesign.com

BRAD YOUNG & ASSOCIATES, INC.
STRUCTURAL ENGINEERING
345 POLLASKY
CLOVIS, CALIFORNIA 93612
PHONE: (559) 323-9600 FAX: (559) 323-9633

© ALL DRAWINGS AND WRITTEN MATERIAL CONTAINED HEREIN ARE THE PROPERTY OF THE LINGLE DESIGN GROUP, INC. THEY MAY NOT BE REVISED, COPIED, REUSED, OR DISCLOSED IN ANY MANNER WITHOUT WRITTEN AUTHORIZATION FROM THE ARCHITECT.

BRADLEY RAE YOUNG LICENSED 158 KANSAS PROFESSIONAL ENGINEER

04-08-26

STATE ID: 150404
BYA PROJECT #: 26203
NATIONAL #: 44655
DRAWN BY: KS
CHECKED BY: TT

DATE:
04/08/26 - PERMIT / BID SET

REVISIONS
1 05/07/26 - QC COMMENTS/ADA UPDATE
2 06/22/26 - CITY COMMENTS / DECOR

CLIENT
McDonald's USA, LLC

PROTOTYPE
BB20 4584 WW-HB
ISSUE DATE 02/25

ADDRESS
707 1/2 METROPOLITAN AVE
LEAVENWORTH, KS 66048

SHEET TITLE
FRAMING PLAN

SHEET NUMBER:
S1.2

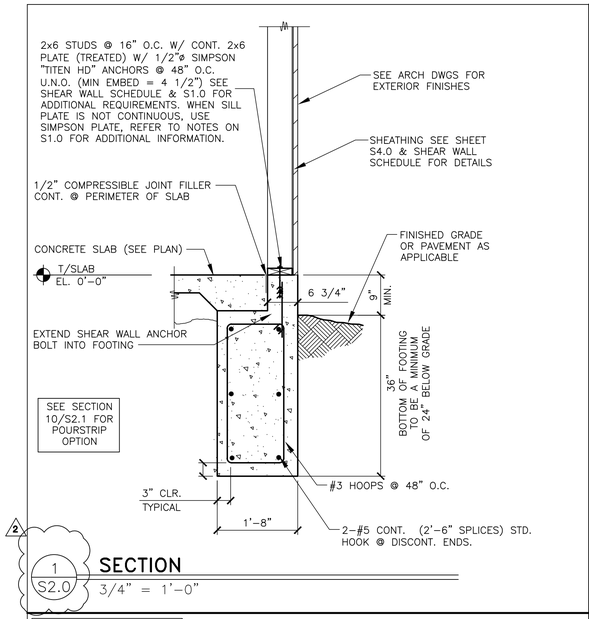

1 S2.0 **SECTION**
3/4" = 1'-0"

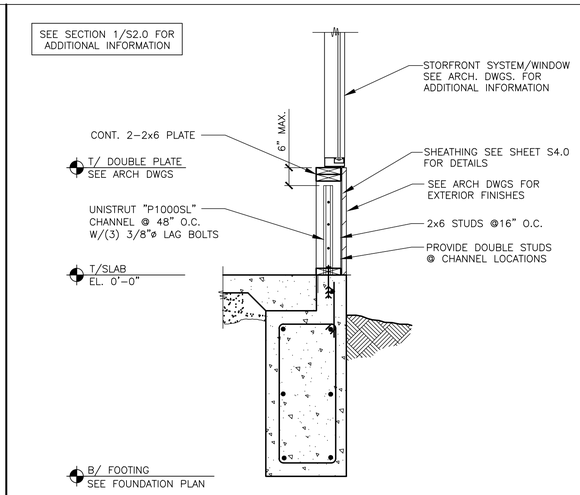

2 S2.0 **SECTION**
3/4" = 1'-0"

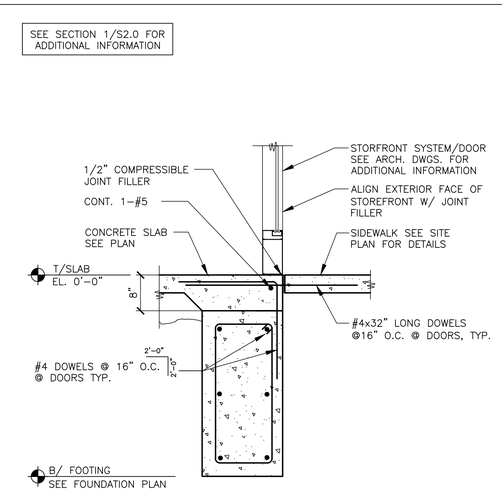

3 S2.0 **SECTION**
3/4" = 1'-0"

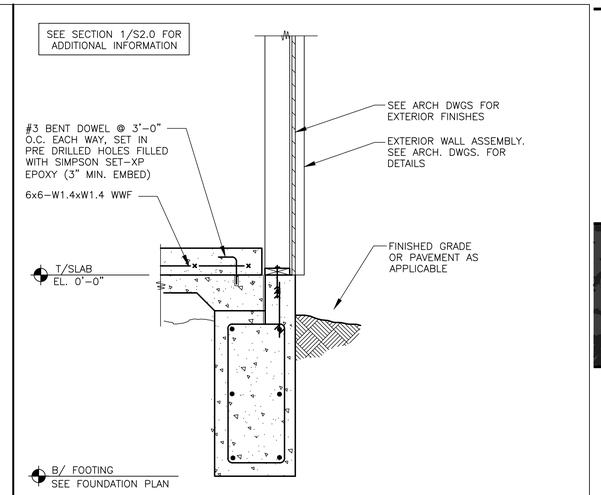

4 S2.0 **SECTION**
3/4" = 1'-0"

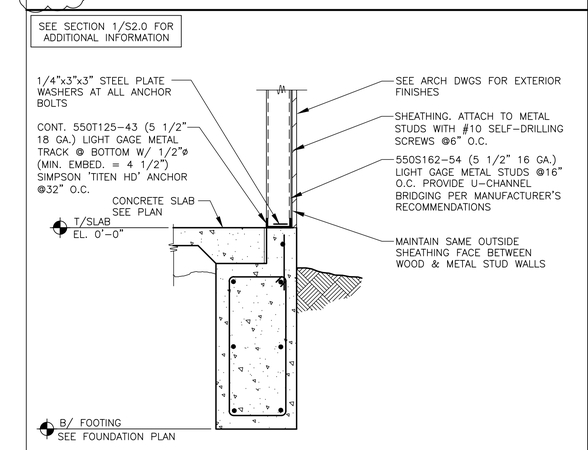

5 S2.0 **SECTION**
3/4" = 1'-0"

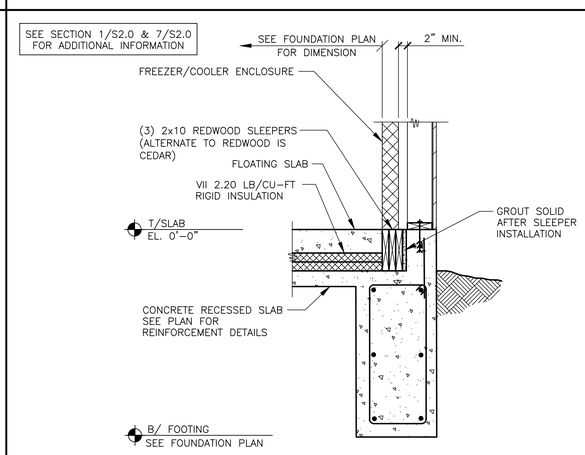

6 S2.0 **SECTION**
3/4" = 1'-0"

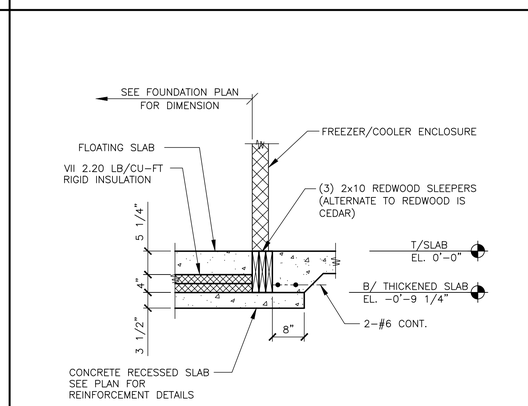

7 S2.0 **SECTION**
3/4" = 1'-0"

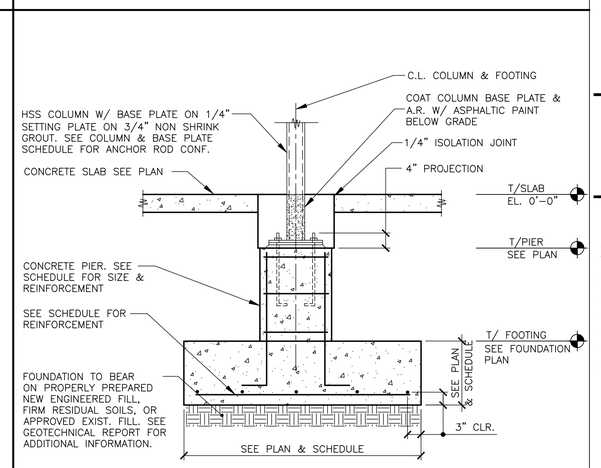

8 S2.0 **ISOLATED COLUMN FOOTING DETAIL**
3/4" = 1'-0"

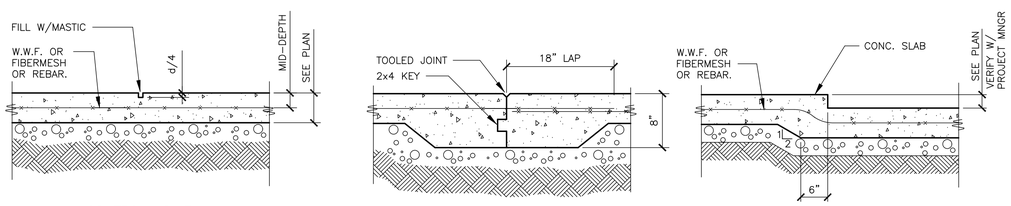

CONTROL JOINT
SAWCUT MAX. NEXT MORNING AFTER SLAB IS CAST

CONTROL JOINTS SHALL BE IN A SQUARE PATTERN OF 400 SQ. FT. AND/OR THE LENGTH SHALL NOT BE MORE THAN 2x WIDTH. ALIGN WITH COLUMN CENTER LINES.

CONSTRUCTION JOINT

SLAB DEPRESSION

SLAB-ON-GRADE TO BEAR ON PROPERLY PREPARED NEW ENGINEERED FILL, FIRM RESIDUAL SOILS, OR APPROVED EXIST. FILL. SEE GEOTECHNICAL REPORT FOR ADDITIONAL INFORMATION.

9 S2.0 **SLAB ON GRADE DETAILS**
N.T.S.

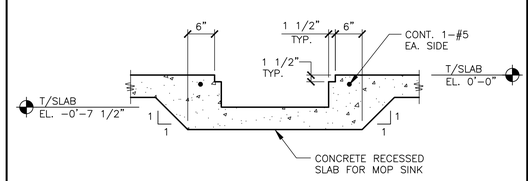

NOTE:
WHERE PREFAB MOP SINK IS USED, DEPTH TO BE 8 7/8" TO ACCOMMODATE FACTORY-BUILT MOP SINK DIMENSION

10 S2.0 **RECESSED SLAB DETAIL**
3/4" = 1'-0"

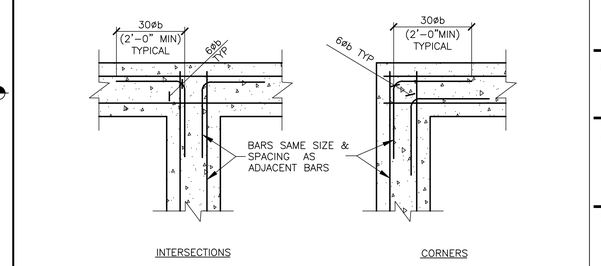

TYPICAL CORNER BAR DETAIL

11 S2.0 **CORNER BAR DETAILS**
N.T.S.

Lingle Design Group inc
158 West Main Street
Lena, IL 61048
815.369.9155
1764 blake st
denver, CO 8020
303.974.5873
www.lingledesign.com

BRAD YOUNG & ASSOCIATES, INC.
STRUCTURAL ENGINEERING
345 POLLASKY
CLOVIS, CALIFORNIA 93612
PHONE: (559) 323-9600 FAX: (559) 323-9633

© ALL DRAWINGS AND WRITTEN MATERIAL CONTAINED HEREIN ARE THE PROPERTY OF THE LINGLE DESIGN GROUP, INC. THEY MAY NOT BE REVISED, COPIED, REUSED, OR DISCLOSED IN ANY MANNER WITHOUT WRITTEN AUTHORIZATION FROM THE ARCHITECT.

BRADLEY RAE YOUNG LICENSED 158 KANSAS PROFESSIONAL ENGINEER

04-08-26

STATE ID: 150404
BYA PROJECT #: 26203
NATIONAL #: 44655
DRAWN BY: KS
CHECKED BY: TT

DATE:
04/08/26 - PERMIT / BID SET

REVISIONS
1 05/07/26 - QC COMMENTS/ADA UPDATE
2 06/22/26 - CITY COMMENTS / DECOR

CLIENT
McDonald's USA, LLC

PROTOTYPE
BB20 4584 WW-HB
ISSUE DATE 02/25

ADDRESS
707 1/2 METROPOLITAN AVE
LEAVENWORTH, KS 66048

SHEET TITLE
FOUNDATION SECTIONS

SHEET NUMBER:
S2.0

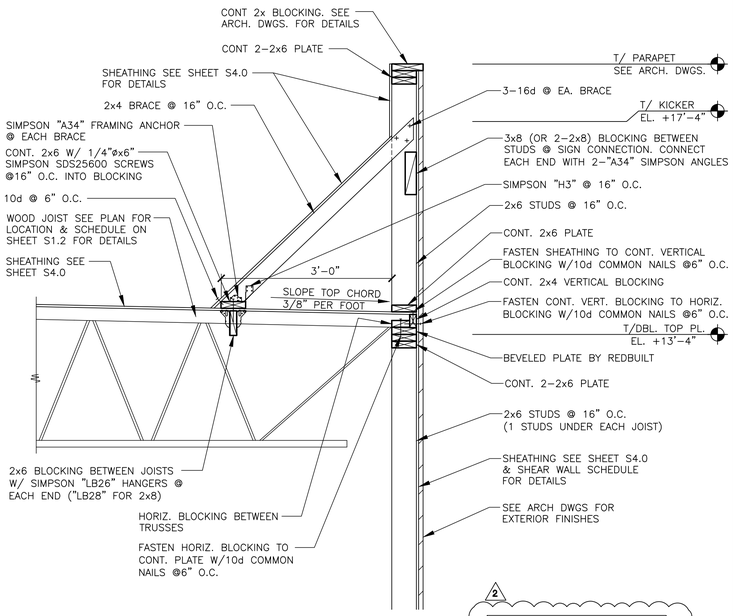

KICKER FORCES (UNFACTORED)
DOWN – 195 PLF (WIND)
UPLIFT – 140 PLF (WIND)

1 S3.0 **SECTION**
3/4" = 1'-0"

SEE SECTION 1/S3.0 FOR ADDITIONAL INFORMATION

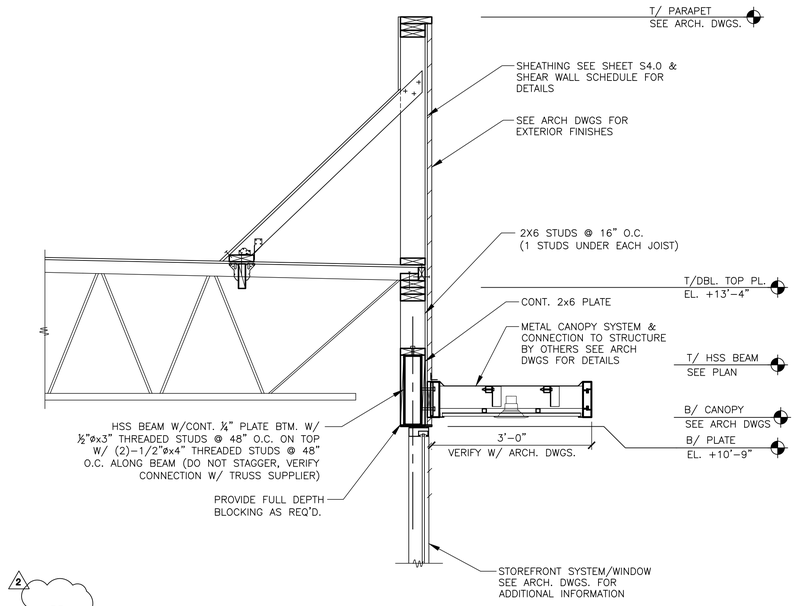

2 S3.0 **SECTION**
3/4" = 1'-0"

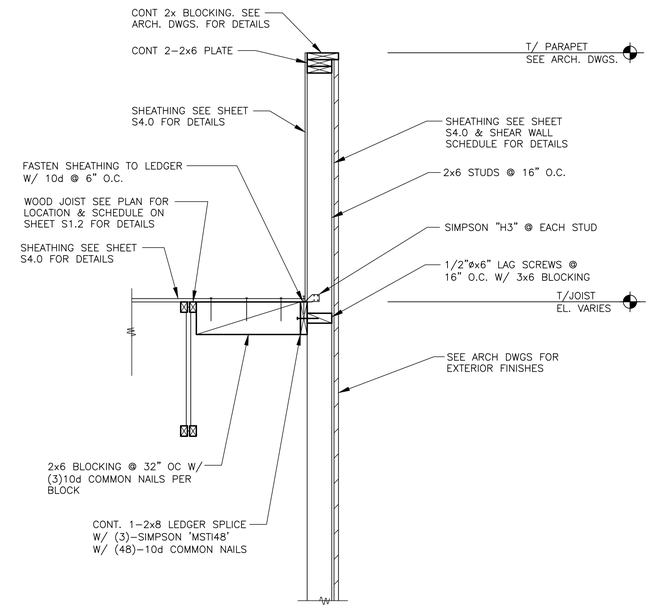

3 S3.0 **SECTION**
3/4" = 1'-0"

SEE SECTION 2/S3.0 & 3/S3.0 FOR ADDITIONAL INFORMATION

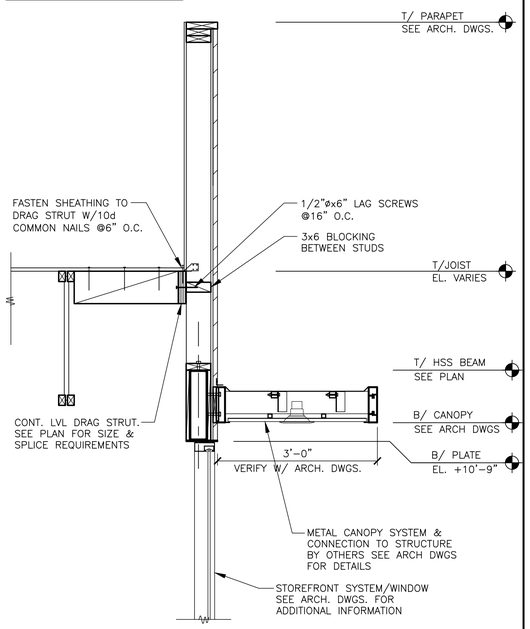

4 S3.0 **SECTION**
3/4" = 1'-0"

SEE SECTION 1/S3.0 FOR ADDITIONAL INFORMATION

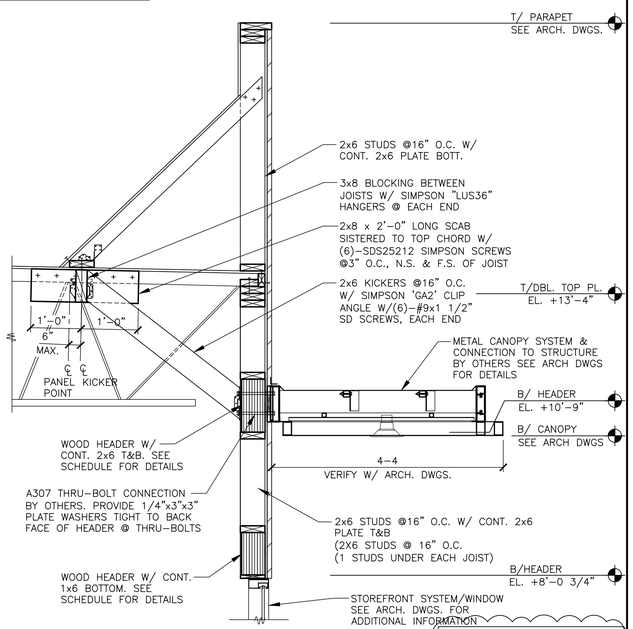

KICKER FORCES (UNFACTORED)
HIGH KICKER
DOWN: – 195 PLF (WIND)
UPLIFT: – 140 PLF (WIND)
LOW KICKER
DOWN: – 270 PLF (WIND)
UPLIFT: – 35 PLF (DEAD)
140 PLF (SNOW)

5 S3.0 **SECTION**
3/4" = 1'-0"

SEE SECTION 4/S3.0 FOR ADDITIONAL INFORMATION

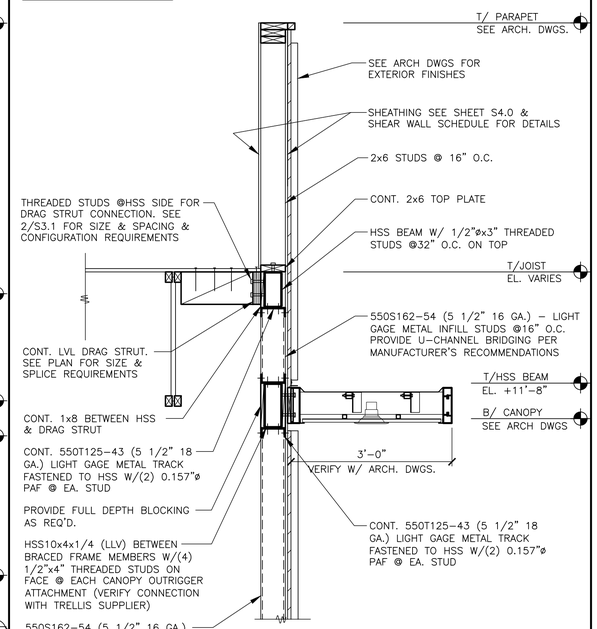

6 S3.0 **SECTION**
3/4" = 1'-0"

SEE SECTION 1/S3.0 FOR ADDITIONAL INFORMATION

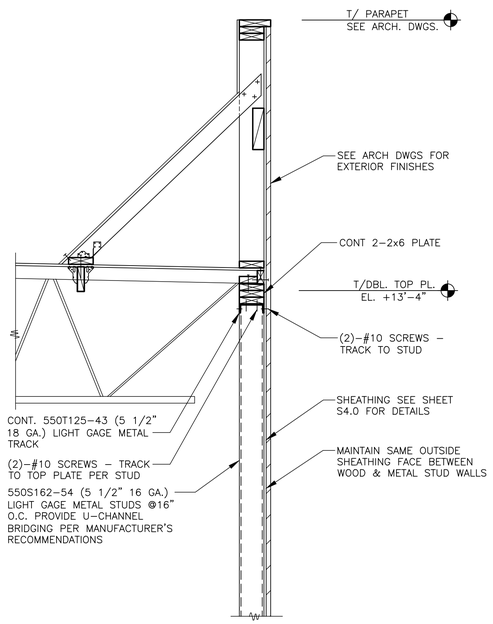

7 S3.0 **SECTION**
3/4" = 1'-0"

Lingle Design Group inc
158 West Main Street
Lena, IL 61048
815.369.9155
1764 blake st
denver, CO 8020
303.974.5873
www.lingledesign.com

BRAD YOUNG & ASSOCIATES, INC.
STRUCTURAL ENGINEERING
345 POLLASKY
CLOVIS, CALIFORNIA 93612
PHONE: (559) 323-9600 FAX: (559) 323-9633

© ALL DRAWINGS AND WRITTEN MATERIAL CONTAINED HEREIN ARE THE PROPERTY OF THE LINGLE DESIGN GROUP, INC. THEY MAY NOT BE REVISED, COPIED, REUSED, OR DISCLOSED IN ANY MANNER WITHOUT WRITTEN AUTHORIZATION FROM THE ARCHITECT.

BRADLEY RAE YOUNG LICENSED 158 KANSAS PROFESSIONAL ENGINEER
04-08-26

STATE ID: 150404
BYA PROJECT #: 26203
NATIONAL #: 44655
DRAWN BY: KS
CHECKED BY: TT

DATE:
04/08/26 - PERMIT / BID SET

REVISIONS
1 05/07/26 - QC COMMENTS/ADA UPDATE
2 06/22/26 - CITY COMMENTS / DECOR

CLIENT
McDonald's USA, LLC

PROTOTYPE
BB20 4584 WW-HB
ISSUE DATE 02/25

ADDRESS
707 1/2 METROPOLITAN AVE
LEAVENWORTH, KS 66048

SHEET TITLE
FRAMING SECTIONS

SHEET NUMBER:
S3.0

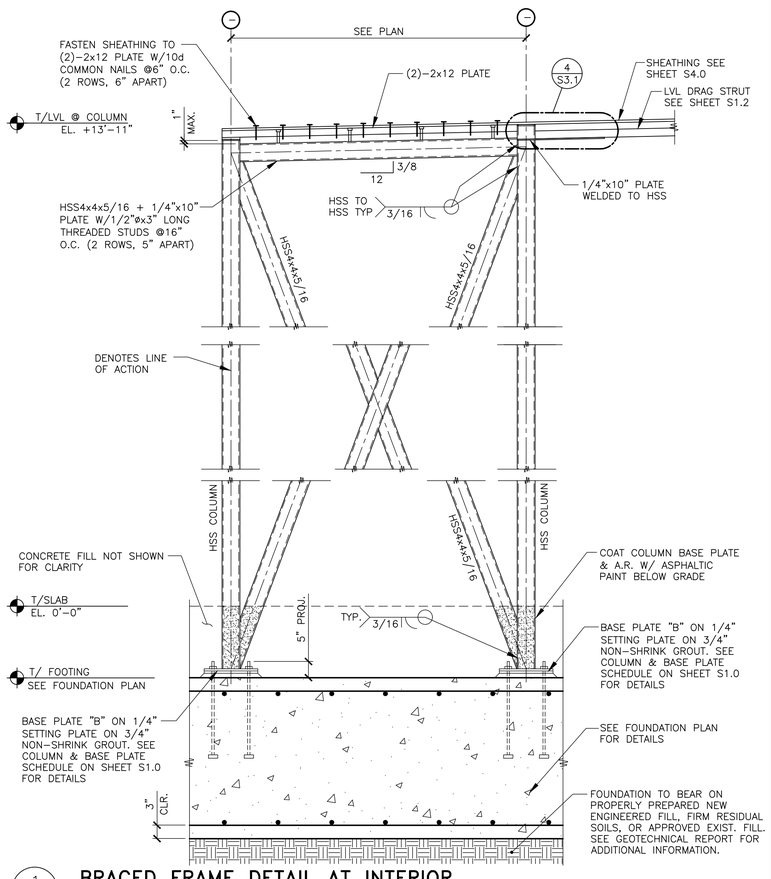

1 S3.1 BRACED FRAME DETAIL AT INTERIOR
3/4" = 1'-0"

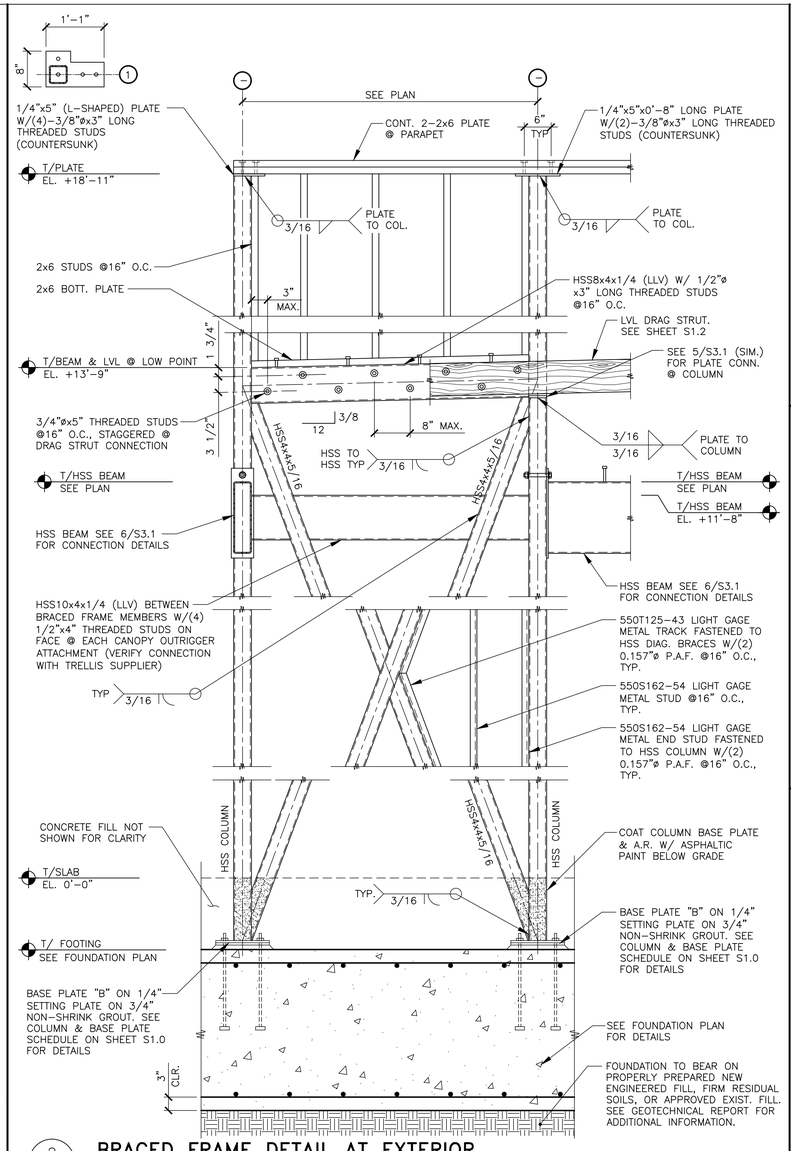

2 S3.1 BRACED FRAME DETAIL AT EXTERIOR
3/4" = 1'-0"

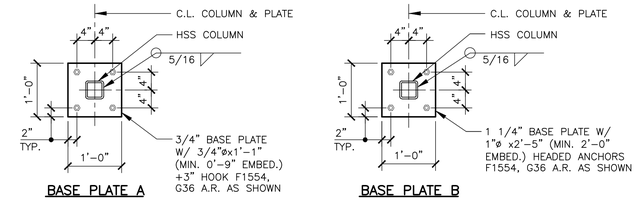

3 S3.1 BASE PLATE DETAILS
N.T.S.

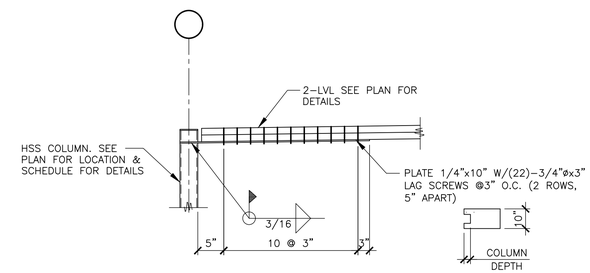

4 S3.1 DRAG STRUT CONNECTION DETAIL
3/4" = 1'-0"

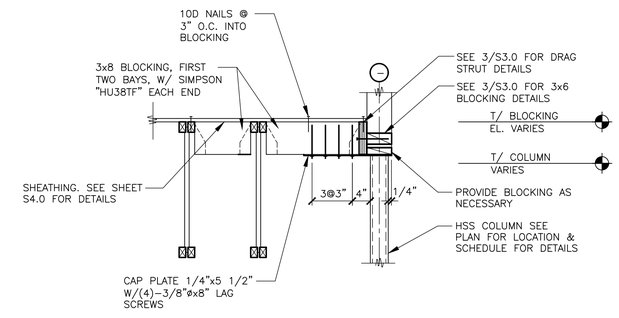

5 S3.1 COLUMN BRACING DETAIL
3/4" = 1'-0"

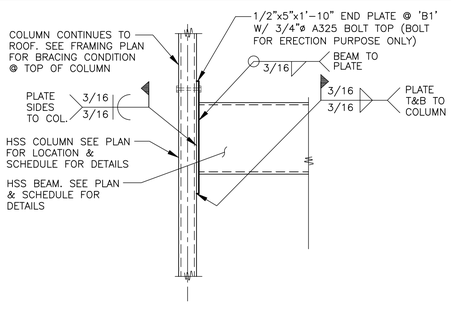

2

6 S3.1 HSS BEAM CONNECTION DETAIL
3/4" = 1'-0"

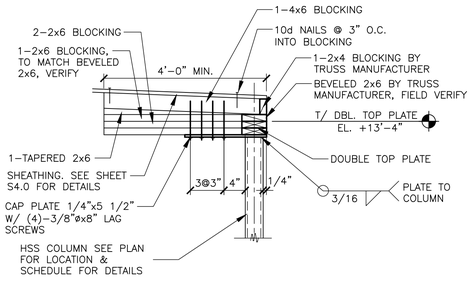

7 S3.1 COLUMN BRACING DETAIL
3/4" = 1'-0"

8 S3.1 NOT USED
3/4" = 1'-0"

9 S3.1 NOT USED
3/4" = 1'-0"

Lingle Design Group inc
158 West Main Street
Lena, IL 61048
815.369.9155
1764 blake st
denver, CO 8020
303.974.5873
www.lingledesign.com

BRAD YOUNG & ASSOCIATES, INC.
STRUCTURAL ENGINEERING
345 POLLASKY
CLOVIS, CALIFORNIA 93612
PHONE: (559) 323-9600 FAX: (559) 323-9633

© ALL DRAWINGS AND WRITTEN MATERIAL CONTAINED HEREIN ARE THE PROPERTY OF THE LINGLE DESIGN GROUP, INC. THEY MAY NOT BE REVISED, COPIED, REUSED, OR DISCLOSED IN ANY MANNER WITHOUT WRITTEN AUTHORIZATION FROM THE ARCHITECT.

BRADLEY RAE YOUNG LICENSED 158 KANSAS PROFESSIONAL ENGINEER
04-08-26

STATE ID: 150404
BYA PROJECT #: 26203
NATIONAL #: 44655
DRAWN BY: KS
CHECKED BY: TT

DATE: 04/08/26 - PERMIT / BID SET

REVISIONS
1 05/07/26 - QC COMMENTS/ADA UPDATE
2 06/22/26 - CITY COMMENTS / DECOR

CLIENT
McDonald's USA, LLC

PROTOTYPE
BB20 4584 WW-HB
ISSUE DATE 02/25

ADDRESS
707 1/2 METROPOLITAN AVE
LEAVENWORTH, KS 66048

SHEET TITLE
STEEL DETAILS

SHEET NUMBER:
S3.1

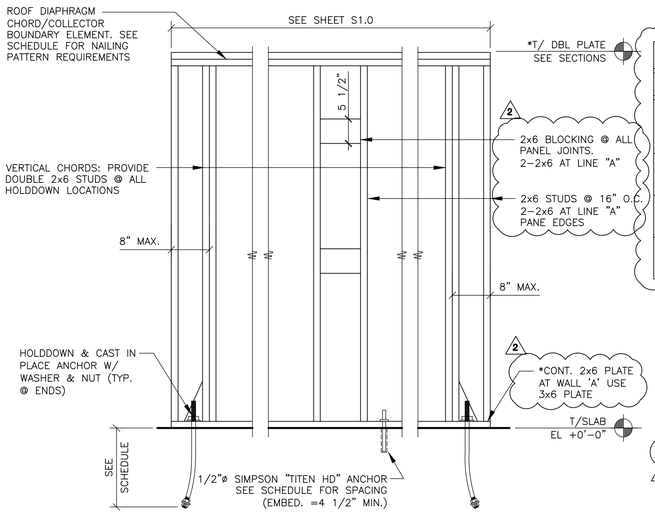

SHEAR WALL SCHEDULE

WIND: 110 MPH (EXPOSURE B) SEISMIC: Sds = 9.8%, Sd1 = 10.4.0%

MARK	SHEATHING	SHEATHING NAIL SIZE	SHEATHING NAIL** SPACING @ PANEL EDGES	HOLDDOWN*** ANCHORS	ANCHOR BOLT SPACING	REMARKS
A	1-15/32"	8d	4"	1-HDUE7-SDS3 W/(1) SABR 5/8x24" PRECAST ANCHOR	16"	18" MIN. EMBED. ON HOLD DOWN ANCHORS. SEE NOTES 5&6
B	1-15/32"	8d	6"	1-HDUE5-SDS3 W/(1) SABR 5/8x24" PRECAST ANCHOR	32"	18" MIN. EMBED. ON HOLD DOWN ANCHORS.
C	1-15/32"	8d	6"	1-HDUE5-SDS3 W/(1) SABR 5/8x24" PRECAST ANCHOR	40"	18" MIN. EMBED. ON HOLD DOWN ANCHORS.

NOTES:
1. SHEATHING PANELS MAY BE LAID UP HORIZONTALLY OR VERTICALLY. NO VERTICAL PANEL EDGES ON VERTICAL CHORDS (HOLDDOWN LOCATION).
2. WIND LOADS GOVERN OVER SEISMIC LOADS UNLESS AS NOTED IN THE REMARKS COLUMN.
3. NAIL ALL SHEATHING TO INTERMEDIATE SUPPORTS @ 12" O.C.
4. SCREW HOLDOWN ANCHORS TO VERTICAL MEMBER W/ 14-"SDS1/4"øx2 1/2" SCREWS EACH.
* IF SILL PLATE OR TOP PLATES ARE NOT CONTINUOUS, CONTACT THE ENGINEER OF RECORD FOR SOLUTION.
** NAIL WALL SHEATHING TO ROOF DIAPHRAGM CHORD & TO EACH MEMBER/WALL VERTICAL CHORD W/ 8d COMMON NAILS @ 6" O.C., UNO.
*** HOLD DOWNS AND HOLD DOWN ANCHOR SYSTEMS PER SIMPSON STRONG TIE & SHALL BE INSTALLED PER MANUFACTURER SPECIFICATIONS.
5. AT SHEARWALL 'A' PLYWOOD TO BE EDGE NAILED TO COLUMN NAILER AT LINE 'A'
6. USE 3x6 SILL PLATE AND 2-2x5 AT PLYWOOD EDGES AND BLOCKING.

1 / S3.2 SHEAR WALL SCHEDULE
N.T.S.

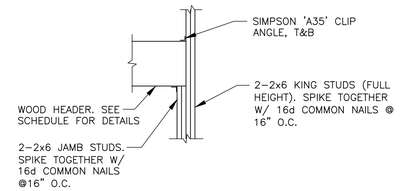

2 / S3.2 HEADER SUPPORT DETAIL
N.T.S.

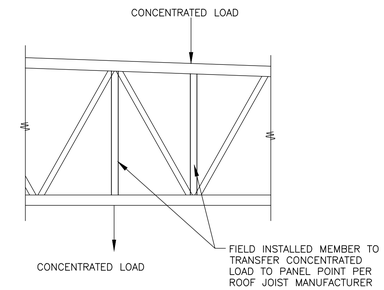

3 / S3.2 JOIST DETAIL @ POINT LOADS
N.T.S.

1. FOR NATIONAL ACCOUNT PACKAGE & PRICING CONTACT REDBUILT @ 1-866-859-6757
2. JOIST MFGR. TO VERIFY SIZE AT HVAC ROOF TOP UNITS.

HEADER	HANGER
2x6	LUS26
2-2x6	LUS26-2
2x8	LUS28
2-2x8	LUS28-2
2x10	LUS210
2-2x10	LUS210-2

FOR OPENINGS < 1'-4" USE 1-2x6
FOR OPENINGS > 1'-4" AND < 4'-0" USE 2-2x8
FOR OPENINGS > 4'-0" AND < 6'-0" USE 2-2x10

3. ALL JOISTS SHALL BE DESIGNED FOR THE FOLLOWING NET UPLIFT. 110 MPH (BASIC) - 8 PSF SERVICE (ASD: 0.6D + 0.6W)

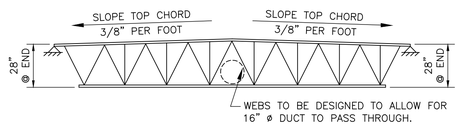

JOIST J1 PROFILE

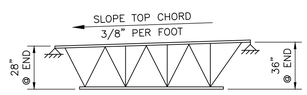

JOIST J2 PROFILE

4 / S3.2 JOIST NOTES
N.T.S.

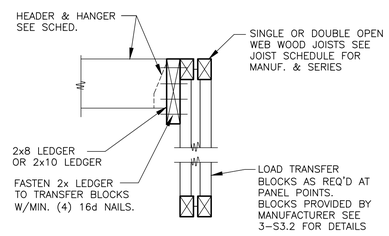

LOAD TRANSFER BLOCKS CONCENTRATED LOADS

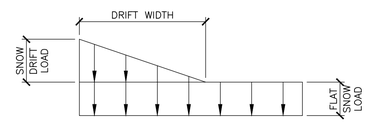

DRIFT	SNOW DRIFT LOAD (PSF)	WIDTH (FT)
SHORT DIRECTION	25.4	6'-3"
LONG DIRECTION	36.2	8'-9"

NOTE: SNOW DRIFT LOADS BASED ON NOMINAL, UNFACTORED GROUND SNOW LOADS. SEE SHEET S4.0 FOR ADDITIONAL INFORMATION.

5 / S3.2 SNOW DRIFT DIAGRAM/SCHEDULE
N.T.S

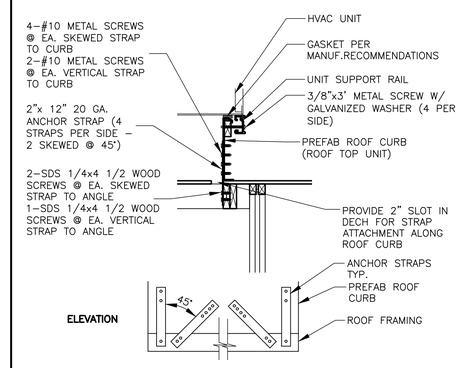

6 / S3.2 SECTION
3/4" = 1'-0"

NOTE: RTU VENDOR/SUPPLIER AND MODEL SHALL BE VERIFIED PRIOR TO INSTALLATION. G.C. TO PROVIDE (2)-2x8 HDRS. BELOW RTU CURBS AND AT PERIMETER OF ALL PENETRATIONS/OPENINGS PER DETAIL 4/S3.2. COORDINATE LOCATIONS AND EXTENT WITH MANUFACTURER CURB SPECIFICATIONS.

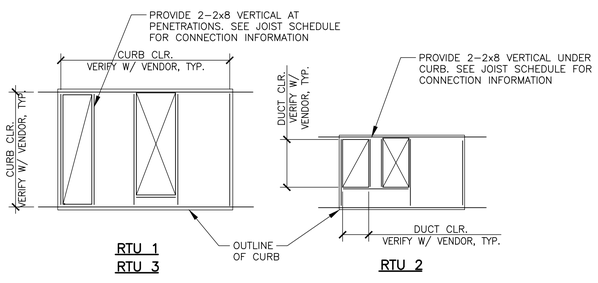

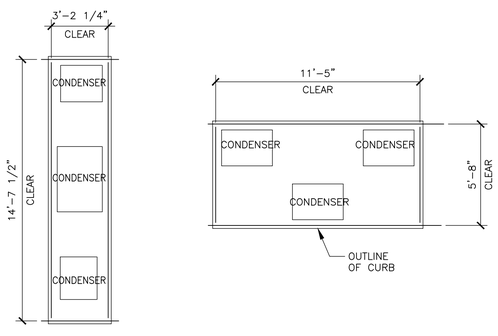

7 / S3.2 ROOF TOP UNIT CLEARANCES
1/4" = 1'-0"

8 / S3.2 NOT USED
N.T.S.

9 / S3.2 NOT USED
N.T.S.

Lingle Design Group inc
158 West Main Street
Lena, IL 61048
815.369.9155
1764 blake st
denver, CO 8020
303.974.5873
www.lingledesign.com

BRAD YOUNG & ASSOCIATES, INC.
STRUCTURAL ENGINEERING
345 POLLASKY
CLOVIS, CALIFORNIA 93612
PHONE: (559) 323-9600 FAX: (559) 323-9633

© ALL DRAWINGS AND WRITTEN MATERIAL CONTAINED HEREIN ARE THE PROPERTY OF THE LINGLE DESIGN GROUP, INC. THEY MAY NOT BE REVISED, COPIED, REUSED, OR DISCLOSED IN ANY MANNER WITHOUT WRITTEN AUTHORIZATION FROM THE ARCHITECT.

BRADLEY RAE YOUNG LICENSED 158 KANSAS PROFESSIONAL ENGINEER
04-08-26

STATE ID: 150404
BYA PROJECT #: 26203
NATIONAL #: 44655
DRAWN BY: KS
CHECKED BY: TT

DATE:
04/08/26 - PERMIT / BID SET

REVISIONS
1 05/07/26 - QC COMMENTS/ADA UPDATE
2 06/22/26 - CITY COMMENTS / DECOR

CLIENT
McDonald's USA, LLC

PROTOTYPE
BB20 4584 WW-HB
ISSUE DATE 02/25

ADDRESS
707 1/2 METROPOLITAN AVE
LEAVENWORTH, KS 66048

SHEET TITLE
DETAILS

SHEET NUMBER:
S3.2

STRUCTURAL GENERAL NOTES:

DESIGN AND LOADING

1. THE STRUCTURAL DESIGN OF THIS BUILDING WAS BASED ON THE DESIGN CRITERIA:
   A. BUILDING CODE: 2018 INTERNATIONAL BUILDING CODE
   B. FLOOR:
      LIVE LOAD: 100 PSF (NON-REDUCIBLE)
   C. ROOF:
      LIVE LOAD: 20 PSF
      DEAD LOAD: 20 PSF
   D. SNOW:
      GROUND LOAD, P_g: 30 PSF
      FLAT ROOF LOAD, P_f: 21 PSF
      IMPORTANCE FACTOR, I_s: 1.0
      EXPOSURE FACTOR, C_e: 1.0
      THERMAL FACTOR, C_t: 1.0
      SLOPE FACTOR, C_s: 1.0
   E. WIND:
      BASIC DESIGN WIND SPEED (3-SECOND GUST), V: 110 MPH
      ALLOWABLE STRESS DESIGN WIND SPEED (3-SECOND GUST), V_{ASD}: 85 MPH
      RISK CATEGORY: II
      WIND EXPOSURE: B
      GC_{pi} = ±0.18
      PRESSURES PER ASCE 7-16
   F. SEISMIC:
      RISK CATEGORY: II
      IMPORTANCE FACTOR: 1.00
      SITE CLASS: D (ASSUMED)
      SS = 0.092, S1= 0.065
      SDS = 0.098, SD1 = 0.104
      DESIGN CATEGORY: B
      PLYWOOD SHEAR WALLS (R = 6.5)
      STEEL SYSTEMS NOT SPECIFICALLY DETAILED FOR SEISMIC RESISTANCE (R = 3.0)
      Cs1: 0.041 (LONGITUDINAL DIRECTION) Cs2: 0.089 (TRANSVERSE DIRECTION)
      DESIGN BASE SHEAR = SEE CALCULATIONS
      ANALYSIS PROCEDURE: EQUIVALENT LATERAL FORCE PROCEDURE
   G. FLOOD LOAD: N/A
   H. SPECIAL LOADS: N/A
   I. RAIN LOADS: N/A

FOUNDATION NOTES

1. THE FOUNDATION DESIGN OF THIS BUILDING WAS BASED ON THE FOLLOWING CRITERIA:
   A. MINIMUM ALLOWABLE SOIL BEARING CAPACITY = 2,000 PSF.
   B. RECOMMENDED BY OLSSON IN THEIR REPORT #025-02525 DATED 11/10/2025
   C. ANY FILL REQUIRED BELOW SLABS ON GRADE OR FOOTINGS SHALL BE COMPACTED AS REQUIRED BY THE SOILS REPORT NOTED IN ITEM #2.
2. ALL EXTERIOR FOOTINGS SHALL EXTEND BELOW THE MAXIMUM ANTICIPATED DEPTH OF FROST.
3. THE CONTRACTOR SHALL NOTIFY THE ARCHITECT OR ENGINEER OF RECORD IMMEDIATELY IN THE EVENT THAT THE SOILS CONDITIONS ENCOUNTERED VARY FROM THOSE SHOWN ON THE BORING LOGS.
4. ALL FOUNDATION EXCAVATIONS SHALL BE INSPECTED BY A SOILS TESTING LABORATORY PRIOR TO PLACEMENT OF CONCRETE.

CONCRETE AND REINFORCING

1. ALL CONCRETE SHALL BE IN ACCORDANCE WITH THE "AMERICAN CONCRETE INSTITUTE BUILDING CODE" (ACI 318) AND WITH "SPECIFICATIONS FOR STRUCTURAL CONCRETE FOR BUILDINGS" (ACI 301) LATEST EDITIONS.
2. ALL NORMAL WEIGHT CONCRETE (145 PCF) SHALL OBTAIN A MINIMUM 28 DAY COMPRESSIVE STRENGTH OF 3000 PSI (3500 PSI FOR SLABS).
3. ALL CONCRETE SUBJECT TO EXTERIOR EXPOSURE SHALL BE AIR ENTRAINED AS RECOMMENDED BY ACI 318.
4. TEST CYLINDERS SHALL BE MADE AND TESTED AS OUTLINED IN CHAPTER 16 OF ACI-301.
5. REINFORCING BARS SHALL BE DEFORMED BARS OF NEW BILLET STEEL CONFORMING TO ASTM A-615, GRADE 60. WELDED WIRE FABRIC SHALL CONFORM TO ASTM A-185. ALL REINFORCING AND ACCESSORIES SHALL BE DETAILED AND PLACED IN ACCORDANCE WITH ACI STANDARD 315 AND 315R.
6. PROVIDE ALL ACCESSORIES NECESSARY TO SUPPORT REINFORCEMENT AT POSITIONS SHOWN ON THE PLANS AND DETAILS. PLASTIC COATED ACCESSORIES SHALL BE USED IN ALL EXPOSED CONCRETE WORK.
7. THE GENERAL CONTRACTOR SHALL CHECK WITH ARCHITECTURAL, MECHANICAL AND ELECTRICAL DRAWINGS AND THE SUB-CONTRACTORS FOR OPENINGS, SLEEVES, ANCHORS, HANGERS, INSERTS, SLAB DEPRESSIONS AND OTHER ITEMS RELATED TO THE CONCRETE WORK AND SHALL ASSUME RESPONSIBILITY FOR THEIR PROPER LOCATION.

STRUCTURAL STEEL

1. STRUCTURAL STEEL SHALL BE DETAILED, FABRICATED AND ERECTED IN CONFORMANCE WITH THE AISC360 "SPECIFICATION FOR STRUCTURAL STEEL". SEISMIC DESIGN OF STRUCTURAL STEEL STRUCTURES SHALL CONFORM TO AISC 341.
2. STRUCTURAL STEEL SHALL CONFORM TO THE FOLLOWING ASTM SPECIFICATIONS:
   A. ANCHOR RODS F1554, GRADE 36
   B. HIGH STRENGTH STRUCTURAL BOLTS A325-N U.N.O.
   C. STRUCTURAL SHAPES (W) A992
   D. STRUCTURAL SHAPES (M, S, C, MC, PLATES) A36
   E. STRUCTURAL SHAPES (HP) A572
   F. STRUCTURAL TUBING (HSS) A500 GRADE B
   G. STRUCTURAL ANGLES A36
3. ALL WELDING ELECTRODES SHALL BE E70-XX. ALL SHOP AND FIELD WELDING SHALL BE MADE IN ACCORDANCE WITH A.W.S. D1.1 "CODE FOR WELDING IN BUILDING CONSTRUCTION" AND SHALL BE MADE BY CERTIFIED WELDERS.

LAMINATED VENEER LUMBER (LVL)

1. ALL BEAMS SHALL BE MANUFACTURED WITH LAMINATED VENEER LUMBER AND WATERPROOF ADHESIVES.
2. SIZE, MANUFACTURER & SERIES OF ALL LVL MEMBERS SHALL BE AS SHOWN ON DRAWINGS.
3. ANY SUBSTITUTIONS MUST BE APPROVED IN WRITING BY ENGINEER OR ARCHITECT OF RECORD.
4. PROVIDE 3" MINIMUM BEARING OR AS SPECIFIED ON PLANS. REFER TO PLANS FOR FASTENING OF MULTIPLE PIECE BEAMS.

OPEN WEB WOOD JOISTS

1. OPEN WEB WOOD JOISTS SHALL BE MANUFACTURED WITH MACHINE STRESS RATED TOP AND BOTTOM CHORDS. WEBS SHALL BE TUBULAR STEEL MEMBERS PER MANUFACTURERS' SPECIFICATIONS.
2. SIZE, MANUFACTURER & SERIES OF ALL OPEN WEB JOISTS SHALL BE AS SHOWN ON DRAWINGS. ANY SUBSTITUTIONS MUST BE APPROVED IN WRITING BY ENGINEER OR ARCHITECT OF RECORD.
3. PROVIDE 3 1/2" MINIMUM BEARING OR AS SPECIFIED ON PLANS. SHIM AS REQUIRED TO PROVIDE FULL BEARING AND LEVEL SUPPORT.
4. DO NOT CUT TOP OR BOTTOM CHORDS.
5. ALL HANGERS AND FRAMING CONNECTORS SHOWN ARE MANUFACTURED BY SIMPSON STRONG TIE. ANY SUBSTITUTIONS MUST BE APPROVED IN WRITING BY ENGINEER OR ARCHITECT OF RECORD.
6. REFER TO PLANS FOR WEB STIFFENER AND CONCENTRATED LOAD REQUIREMENTS.
7. REFER TO MANUFACTURERS' INSTALLATION GUIDE FOR JOIST BRACING DURING ERECTION. REFER TO MANUFACTURERS' INSTALLATION GUIDE FOR JOIST BRIDGING REQUIREMENTS.

SAWN LUMBER

1. ALL GRADES OF LUMBER INDICATED ON STRUCTURAL DRAWINGS SHALL BE RATED BY THE SOUTHERN PINE INSPECTION BUREAU (SPIB), OR THE WESTERN WOOD PRODUCTS ASSOCIATION (WWPA). LUMBER GRADES SHALL BE AS FOLLOWS, WITH A MAXIMUM MOISTURE CONTENT OF 19%:
   A. SOUTHERN PINE NO. 1.
   B. DOUGLAS FIR-LARCH NO. 1.
   C. HEM-FIR NORTH NO. 1
2. BOLT HEADS AND NUTS BEARING ON WOOD SHALL BE PROVIDED WITH STANDARD CUT WASHERS. ALL WOOD IN CONTACT WITH CONCRETE OR MASONRY SHALL BE PRESSURE TREATED.
3. MINIMUM NAILED CONNECTIONS FOR WOOD FRAMING MEMBERS SHALL BE IN ACCORDANCE WITH THE LOCAL BUILDING CODE OR TABLE 2304.9.1 OF THE INTERNATIONAL BUILDING CODE IF NO OTHER CRITERIA IS GIVEN.
4. CONNECTORS SHOWN ON THE DETAILS ARE MANUFACTURED BY SIMPSON. WRITTEN APPROVAL BY ENGINEER REQUIRED FOR SUBSTITUTIONS.

ROOF & WALL SHEATHING

1. ALL SHEATHING SHALL CONFORM TO AMERICAN PLYWOOD ASSOCIATION (APA) DESIGN SPECIFICATIONS, LATEST EDITION. SHEATHING SHALL BE CONTINUOUS OVER THREE ADJACENT SPANS MINIMUM.
2. WALL SHEATHING SHALL BE 15/32" (1/2" NOMINAL) APA RATED SHEATHING, EXPOSURE 1, 32/16. ALL WALL SHEATHING SHALL BE FASTENED TO SUPPORTING MEMBERS W/ 8d COMMON NAILS @ 6" O.C. AT PANEL EDGES AND 12" O.C. AT INTERMEDIATED SUPPORTS, U.N.O.
3. ROOF SHEATHING SHALL BE 23/32" (3/4" NOMINAL) APA RATED SHEATHING, EXPOSURE 1, 48/24. ALL ROOF SHEATHING SHALL BE FASTENED TO SUPPORTING MEMBERS W/10d COMMON NAILS @ 6" O.C. AT PANEL EDGES, AND 12" O.C. AT INTERMEDIATE SUPPORTS. U.N.O.

LIGHT GAGE METAL FRAMING

1. 16 GA. AND HEAVIER STUDS SHALL HAVE A MINIMUM YIELD STRESS OF 50,000 PSI. 18 GA. AND LIGHTER STUDS AND TRACKS SHALL HAVE A MINIMUM YIELD STRESS OF 33,000 PSI.
2. STUDS AND TRACKS SHALL BE 18 GA. MINIMUM U.N.O. THEY SHALL BE MANUFACTURED BY DIETRICH INDUSTRIES, INC. OR APPROVED EQUAL.
3. PROVIDE DOUBLE STUDS FOR FULL HEIGHT OF WALL EACH SIDE OF ALL OPENINGS UNLESS OTHERWISE NOTED. WELD STUDS TO EACH OTHER WITH 1 1/2" LONG 1/8" FILLET WELDS AT 12" O.C. EACH SIDE. PROVIDE STUD TRACK AT EACH HEAD AND SILL.
4. REFER TO PLANS AND DETAILS FOR CONNECTION OF STUD WALLS TO FOUNDATION, FLOOR OR ROOF.

SHOP DRAWINGS

1. SHOP DRAWING SUBMITTALS SHALL BE SUBMITTED ELECTRONICALLY.
2. SHOP DRAWINGS SHALL BE REVIEWED BY CONTRACTOR TO VERIFY THAT SUBMITTAL IS COMPLETE PRIOR TO SUBMITTING TO ARCHITECT/ENGINEER.
3. DRAWINGS CREATED BY THE ENGINEER OF RECORD CANNOT BE REPRODUCED AND/OR USED AS A SHOP DRAWING SUBMITTAL. SHOP DRAWING SUBMITTALS SHALL INCLUDE THE FOLLOWING:
   A. CONCRETE MIX DESIGN
   B. FOUNDATION REINFORCING BARS
   C. STRUCTURAL STEEL
   D. OPEN WEB JOISTS AND CALCULATIONS
   E. ROOF SHEATHING
   F. TRELLIS SYSTEM & CALCULATIONS
   G. LAMINATED VENEER LUMBER (LVL)
   H. SAWN LUMBER AND CONNECTORS

SPECIAL INSPECTIONS

1. SPECIAL INSPECTIONS SHALL BE PERFORMED IN ACCORDANCE WITH SECTION 1705 OF IBC AND THE OWNER SHALL EMPLOY ONE OR MORE SPECIAL INSPECTORS TO PROVIDE INSPECTIONS DURING CONSTRUCTION ON THE TYPES OF WORK LISTED UNDER SECTION 1705. THE FOLLOWING AREAS OF WORK REQUIRE SPECIAL INSPECTIONS IN ACCORDANCE WITH THE LISTED 2021 INTERNATIONAL BUILDING CODE SECTIONS/LOCATIONS:
   A. SOILS – SECTION 1705.6 PER TABLE 1705.6
   B. CONCRETE – SECTION 1705.3 PER TABLE 1705.3
   C. STEEL – SECTION 1705.2 (SEE AISC 360-16)
   D. WOOD – SECTION 1705.5

MISCELLANEOUS

1. ALL DIMENSIONS ON STRUCTURAL DRAWINGS TO BE CHECKED AGAINST ARCHITECTURAL, MECHANICAL AND ELECTRICAL DRAWINGS BY THE GENERAL CONTRACTOR AND ANY DISCREPANCIES ARE TO BE REPORTED TO THE ARCHITECT IMMEDIATELY.
2. THE CONTRACTOR SHALL ASSUME RESPONSIBILITY, UNRELIEVED BY REVIEW OF SHOP DRAWINGS OR PERIODIC OBSERVATION OF CONSTRUCTION, FOR COMPLIANCE WITH THE CONTRACT DOCUMENTS, FOR FABRICATION PROCESSES AND CONSTRUCTION TECHNIQUES, AND FOR SAFE CONDITIONS ON THE JOB SITE.
3. DO NOT SCALE THE DRAWINGS.

Lingle Design Group inc
158 West Main Street
Lena, IL 61048
815.369.9155
1764 blake st
denver, CO 8020
303.974.5873
www.lingledesign.com

BRAD YOUNG & ASSOCIATES, INC.
STRUCTURAL ENGINEERING
345 POLLASKY
CLOVIS, CALIFORNIA 93612
PHONE: (559) 323-9600 FAX: (559) 323-9633

© ALL DRAWINGS AND WRITTEN MATERIAL CONTAINED HEREIN ARE THE PROPERTY OF THE LINGLE DESIGN GROUP, INC. THEY MAY NOT BE REVISED, COPIED, REUSED, OR DISCLOSED IN ANY MANNER WITHOUT WRITTEN AUTHORIZATION FROM THE ARCHITECT.

BRADLEY RAE YOUNG LICENSED 15158 KANSAS PROFESSIONAL ENGINEER

04-08-26

STATE ID: 150404
BYA PROJECT #: 26203
NATIONAL #: 44655
DRAWN BY: KS
CHECKED BY: TT

DATE:
04/08/26 - PERMIT / BID SET

REVISIONS
1 05/07/26 - QC COMMENTS/ADA UPDATE
2 06/22/26 - CITY COMMENTS / DECOR

CLIENT
McDonald's USA, LLC

PROTOTYPE
BB20 4584 WW-HB
ISSUE DATE 02/25

ADDRESS
707 1/2 METROPOLITAN AVE
LEAVENWORTH, KS 66048

SHEET TITLE
STRUCTURAL NOTES

SHEET NUMBER:
S4.0

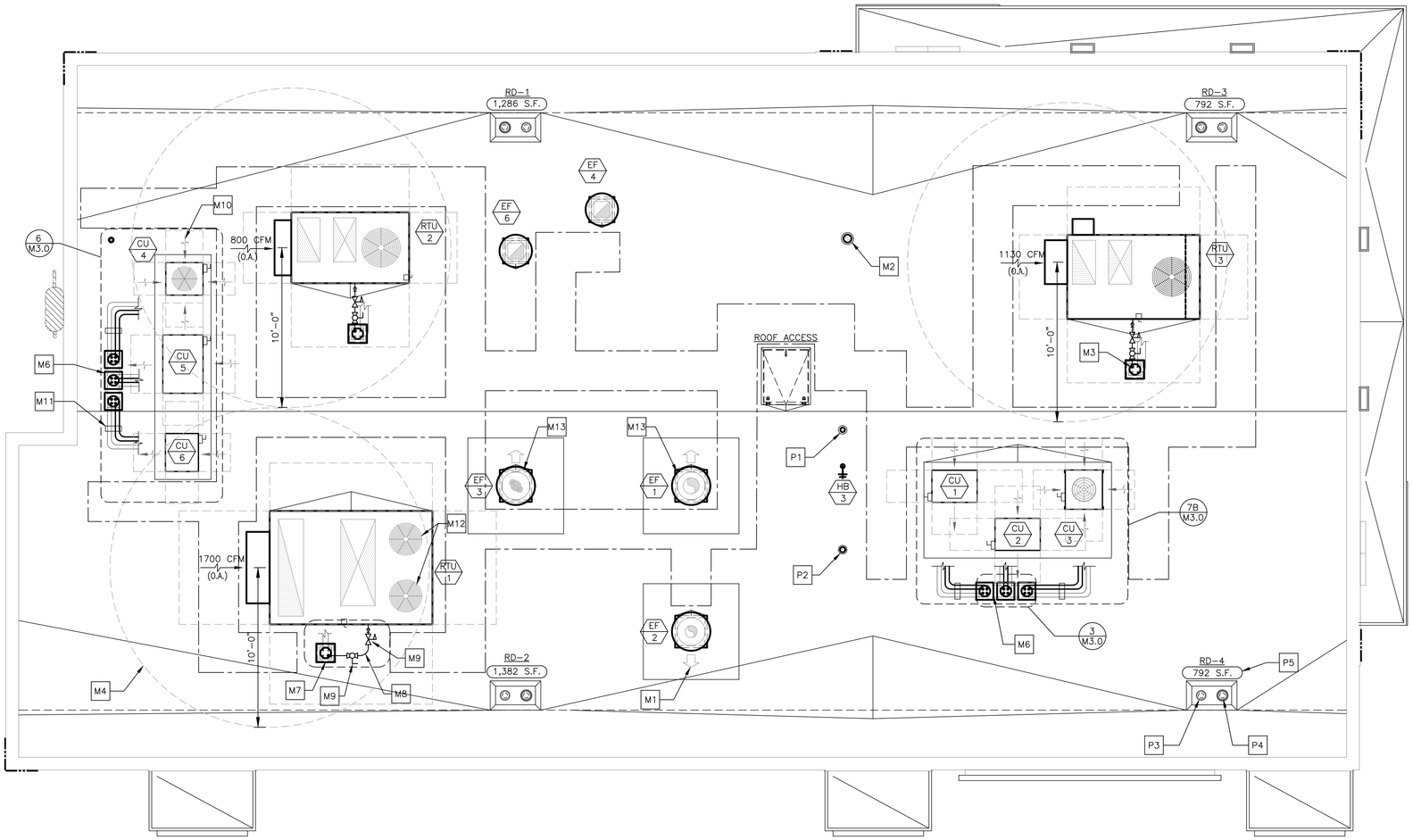

CONDENSATE LINE FROM RTUs DOWN THROUGH THE ROOF ON UNITS BASE, TO BE FURNISHED AND INSTALLED BY PC. SEE PLUMBING SHEETS P1.2, P2.1 AND COORDINATION SCHEDULE ON M4.1.

1 / M1.0 ROOF PLAN
1/4"=1'-0"

DRAWING NOTES

1. ROOFTOP EQUIPMENT LOCATIONS SHOWN ARE GENERAL. ACTUAL LOCATIONS SHALL BE COORDINATED WITH THE STRUCTURAL DRAWINGS.
2. ROOF OPENINGS FOR ROOFTOP UNITS AND EXHAUST FANS SHALL BE COORDINATED WITH THE MANUFACTURER.
3. ROOF OPENINGS FOR PIPE PORTALS SHALL ONLY BE LARGE ENOUGH TO ALLOW PIPE AND CONDUIT PENETRATIONS. PIPE PORTAL CURB SHALL BE FILLED WITH AS MUCH BATT INSULATION AS POSSIBLE.
4. PRIOR TO INSTALLING THE TOP OF THE EQUIPMENT PLATFORM, INSIDE OF THE PLATFORM SHALL BE INSULATED WITH AS MUCH BATT INSULATION AS POSSIBLE.

KEYED NOTES

- M1 ARROW INDICATES DIRECTION OF EXHAUST FAN HINGE SWING (TYP.)
- M2 6"ø ALUMINUM EXHAUST DUCT FROM EXHAUST FAN (EF-5). PROVIDE PORTALS PLUS PLASTI-FLASH WITH C-126 CAP (OR EQUAL) FOR ROOF PENETRATION. TERMINATE DUCT A MIN. OF 24" ABOVE FINISHED ROOF WITH GOOSENECK.
- M3 GAS PIPING DOWN (TYP. 3 PLACES)
- M4 MAINTAIN A MINIMUM 10'-0" CLEARANCE FROM EDGE OF OUTLETS AND VENT TERMINALS TO FRESH AIR INTAKES (TYP.)
- M5 (NOT USED)
- M6 ROOF PIPE PORTAL FOR CONDENSING UNITS
- M7 ROOF PIPE PORTAL FOR ROOFTOP UNITS (TYP. 3 PLACES)
- M8 GAS PIPING FROM ROOF PORTAL TO ROOFTOP UNIT SHALL BE COATED WITH A CORROSION RESISTANT PAINT (SEE SHEET M4.0 "NATURAL GAS SYSTEMS", NOTE 8).
- M9 GAS PRESSURE REGULATOR AND SHUT-OFF VALVE, SET PRESSURE AT 7" W.C. - NATURAL GAS (TYP. OF 3)
- M10 ARROW INDICATES DIRECTION OF AIRFLOW FOR CONDENSING OR ROOFTOP UNIT AIR INTAKE (TYP.)
- M11 REFRIGERANT PIPING SUPPORT AS REQUIRED. PROVIDE ROOFTOP BLOX MODEL RTB-01 (OR EQUAL) AND ALL NECESSARY ACCESSORIES FOR PROPER PIPE AND CONDUIT SUPPORT. PROVIDE GALVANIZED PIPE SHIELD TO PROTECT INSULATION AT ALL SUPPORTS.
- M12 PROVIDE HAIL GUARD FOR RTU-1 PROTECTING CONDENSER COIL FROM GREASE.
- M13 EXHAUST FANS WITH WINDBAND EXTENSION TO PREVENT DIRECT GREASE BLOW ONTO CONDENSER COIL OF UNIT RTU-1.
- P1 CONCENTRIC VENTING KIT FOR COMBUSTION AIR INTAKE AND FLUE EXHAUST FOR SEALED COMBUSTION WATER HEATER (SEE PLUMBING DRAWINGS). PROVIDE PORTALS PLUS PLASTIFLASH WITH C-126 CAP (OR EQUAL) FOR ROOF PENETRATION.
- P2 PLUMBING VENT THROUGH ROOF (SEE PLUMBING DRAWINGS). PROVIDE PORTALS PLUS PLASTI-FLASH WITH C-126 CAP (OR EQUAL) FOR ROOF PENETRATION.
- P3 PRIMARY ROOF DRAIN WITH DOME STRAINER (TYP). (SEE PLUMBING DRAWINGS)
- P4 OVERFLOW ROOF DRAIN WITH DOME STRAINER (TYP). (SEE PLUMBING DRAWINGS)
- P5 AREA OF ROOF SERVED BY ROOF DRAIN (TYP.)

PIPE PORTAL SCHEDULE

MANUFACTURER	CURB DIMENSIONS	CURB TYPE	CAP TYPE (QTY)	SERVES
RPS	12"x12"x11"H	RC-2A	N18 (1)	RTU-1 THROUGH RTU-3
RPS	43"x12"x13"H	RC-2A	N18 (3)	CU-1 THROUGH CU-6

SEQUENCE OF OPERATION

THERMOSTAT SETTINGS

MODE	FAN	SETPOINTS COOLING	SETPOINTS HEATING
OCCUPIED	ON	75°F	70°F
UNOCCUPIED	AUTO	90°F	55°F
HUMIDITY			
HUMIDITY SETPOINT (FOR DEHUMIDIFICATION UNITS ONLY)			60%

RTU-1, RTU-2 & RTU-3:

1. OCCUPIED MODE SHALL BEGIN AS FOLLOWS:
   - RTU-1: 1.5 HOURS BEFORE OPEN
   - RTU-2: 1 HOUR BEFORE OPEN
   - RTU-3: 30 MINUTES BEFORE OPEN
2. ROOFTOP UNIT FAN SHALL RUN CONTINUOUSLY DURING OCCUPIED MODE
3. ECONOMIZER SHALL BE OPEN DURING OCCUPIED MODE (OUTDOOR AIR THROUGH ROOFTOP UNITS SERVES AS MAKE-UP AIR FOR THE KITCHEN EXHAUST SYSTEM) - REFER TO E3.2 FOR HOOD/FAN INTERLOCK DETAILS.
4. UNOCCUPIED MODE SHALL BEGIN ONE (1) HOUR AFTER STORE CLOSES
5. DURING UNOCCUPIED MODE, ECONOMIZER IS CLOSED AND HEATING, COOLING AND FAN OPERATE IN AUTO MODE (ON DEMAND)
6. RTU-2 SHALL BE INTERLOCKED WITH EF-6. UPON ACTIVATION OF EF-6, RTU-2 SHALL INCREASE SUPPLY AND OUTSIDE AIR BY 600 CFM, WHILE MAINTAINING 1250 CFM RETURN AIR. COORDINATE WITH E.C. AND BAS SUPPLIER.

LINGLE DESIGN GROUP INC
158 WEST MAIN STREET
LENA, IL 61048
815.369.9155
1764 BLAKE ST
DENVER, CO 8020
303.974.5873
WWW.LINGLEDESIGN.COM

WCW Engineers, Inc.
760 Creel Drive
Wood Dale, Illinois 60191
Tel. 630/595-8800
Fax 630/595-8818
www.WCWengineers.com

© ALL DRAWINGS AND WRITTEN MATERIAL CONTAINED HEREIN ARE THE PROPERTY OF THE LINGLE DESIGN GROUP, INC. THEY MAY NOT BE REVISED, COPIED, REUSED, OR DISCLOSED IN ANY MANNER WITHOUT WRITTEN AUTHORIZATION FROM THE ARCHITECT.

LICENSE EXPIRATION: APR 30, 2027

JOSEPH G. THOMAS LICENSED 16129 KANSAS PROFESSIONAL ENGINEER

DATE ISSUED: JUN 22, 2026

STATE ID: 150404
NATIONAL #: 446655
PROJECT #: 26-028
DRAWN BY: SC
CHECKED BY: JT

DATE:
04/08/26 - PERMIT / BID SET

REVISIONS
1 05/07/26 - QC COMMENTS/ADA UPDATE
2 06/22/26 - CITY COMMENTS / DECOR

CLIENT
McDonald's USA, LLC

PROTOTYPE
BB20 4584 WW-HB
ISSUE DATE 02/25

ADDRESS
707 1/2 METROPOLITAN AVE
LEAVENWORTH, KS 66048

SHEET TITLE
ROOF PLAN

SHEET NUMBER:
M1.0

H:\26113\Dwg\MECH.dwg, M1-0, 6/19/2026 10:42:27 AM, 1:1

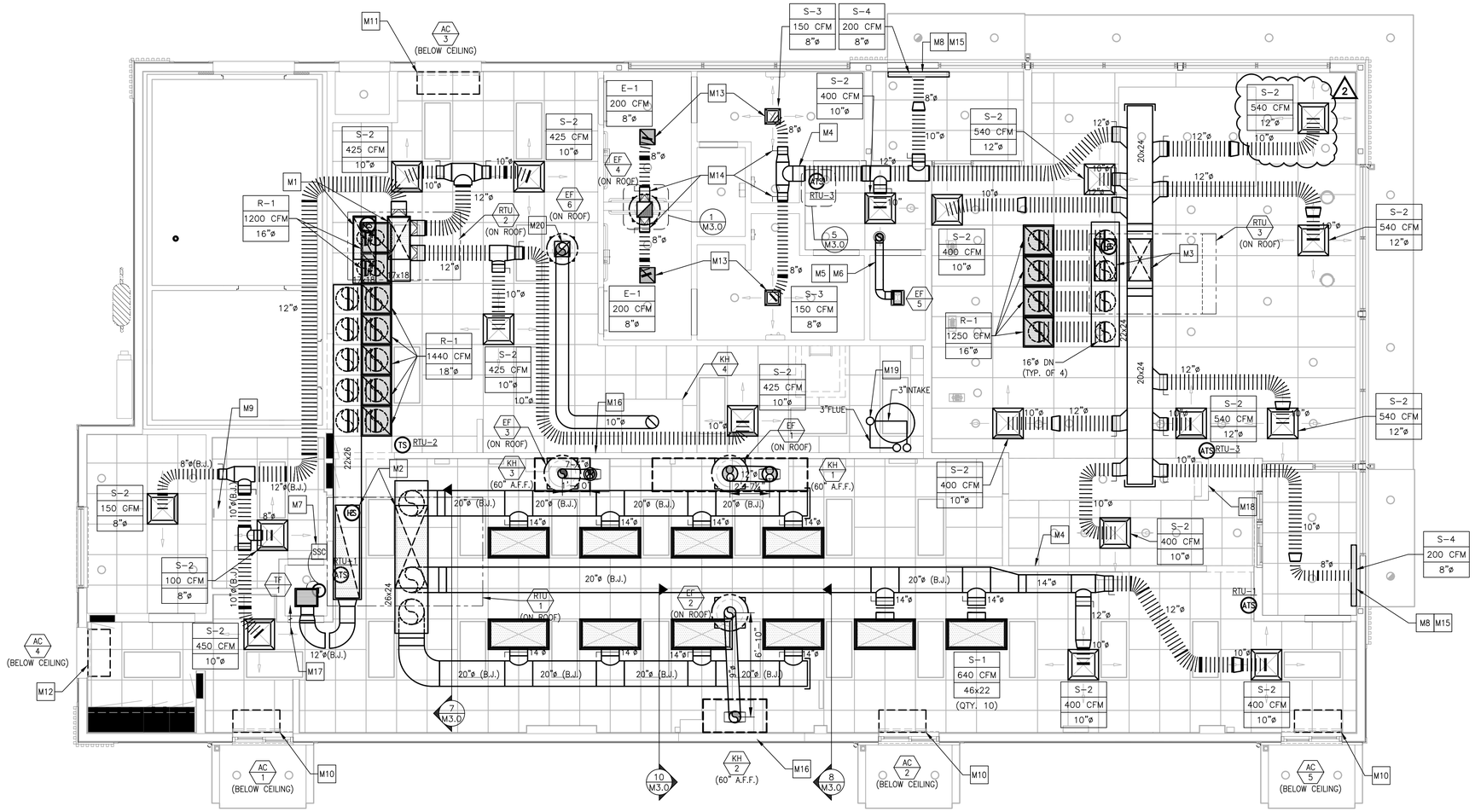

1 M1.2 DUCTWORK PLAN
1/4"=1'-0"

DRAWING NOTES

1. ALL DUCTWORK SHALL BE RUN BETWEEN OR THROUGH THE JOISTS UNLESS NOTED OTHERWISE. DUCTWORK DESIGNATED WITH (B.J.) SHALL BE RUN BELOW THE JOISTS.
2. DUCT SIZES SHOWN ARE INTERNAL FREE AREA DIMENSIONS UNLESS NOTED OTHERWISE.
3. ALL SHEET METAL DUCTWORK SHALL BE EXTERNALLY INSULATED. INSULATION IS NOT SHOWN FOR CLARITY. SEE MECHANICAL NOTES FOR INSULATION REQUIREMENTS.
4. CARBON STEEL KITCHEN EXHAUST DUCTWORK SHALL BE EXTERNALLY INSULATED. INSULATION NOT SHOWN FOR CLARITY. SEE MECHANICAL NOTES AND DETAILS FOR INSULATION REQUIREMENTS.
5. RETURN AIRFLOW VOLUME SHOWN ON PLAN IS FOR DUCTWORK SIZING PURPOSES WHEN THE UNIT IS IN RECIRCULATION (UNOCCUPIED) MODE.
6. DIFFUSERS IN DINING ROOM ARE SPECIFIC TO THE DECOR PLAN SHOWN. DIFFERENT CEILING LAYOUTS MAY REQUIRE A DIFFERENT DIFFUSER TYPES, QUANTITIES, LOCATIONS AND FINISHES/COLORS.
7. NO DIFFUSERS OR GRILLES TO BE INSTALLED ABOVE KIOSKS TO AVOID CONFLICTS WITH KIOSK'S CEILING PENETRATIONS FOR CONDUITS

KEYED NOTES

- M1 17x33 SUPPLY AND 17x33 RETURN DUCT DROPS FROM ROOFTOP UNIT (RTU-2)
- M2 26x63 SUPPLY AND 19x73 RETURN DUCT DROPS FROM ROOFTOP UNIT (RTU-1)
- M3 17x33 SUPPLY AND 17x33 RETURN DUCT DROPS FROM ROOFTOP UNIT (RTU-3)
- M4 PROVIDE SHEET METAL DUCT AT ALL DRAFTSTOP WALL PENETRATIONS (TYP.)
- M5 6"ø ALUMINUM DUCT FROM EXHAUST FAN UP THROUGH ROOF
- M6 EXTERNALLY INSULATE EXHAUST DUCT FROM FAN TO ROOF PENETRATION
- M7 STEADY STATE SPEED CONTROLLER FOR CEILING MOUNTED EXHAUST FAN. STEADY STATE SPEED CONTROLLER SHALL BE INSTALLED OVER SUSPENDED CEILING FOR ACCESS. DO NOT INSTALL OVER AREAS WITH DRYWALL CEILINGS. SET COMPUTER CLOSET THERMOSTAT TO 80 F (adj.).
- M8 SET DIFFUSER'S (S-5) OUTER SLOT FOR VERTICAL AIR THROW PATTERN AND INNER SLOT FOR HORIZONTAL THROW PATTERN (TYP.)
- M9 BUILDING AUTOMATION SYSTEM LOCATION. SEE LIGHTING CONTROL DETAILS ON SHEET E4.1.
- M10 MOUNT AIR CURTAIN TIGHT TO CEILING
- M11 MOUNT AIR CURTAIN WITH BOTTOM OF UNIT AT TOP OF DOOR FRAME
- M12 MOUNT AIR CURTAIN WITH BOTTOM OF UNIT ABOVE DOOR FRAME AND TOP OF SWITCHGEAR TO MEET 3'-0" MINIMUM SWITCHGEAR'S CLEARANCE REQUIREMENT
- M13 FOR DIFFUSERS INSTALLED IN DRYWALL CEILINGS, VOLUME DAMPER IS INTEGRAL TO DIFFUSER AND ADJUSTABLE AT FACE OF DIFFUSER (SEE NOTE 18 UNDER "VENTILATION SYSTEMS" ON DRAWING M4.0 AND AIR DEVICE SCHEDULE ON DRAWING M4.1)
- M14 FOR DIFFUSERS INSTALLED IN DRYWALL CEILINGS, INSTALL HIGH-EFFICIENCY TAKE-OFFS WITH VOLUME DAMPER IN FULL-OPEN POSITION TO FACILITATE BALANCING AT FACE OF DIFFUSER.
- M15 GENERAL CONTRACTOR SHALL PROVIDE ADDITIONAL T-BAR FRAME TO PROPERLY LOCATE DIFFUSER AS SHOWN. AIR STREAM FROM DIFFUSER SHALL COVER ENTIRE DOOR OPENING.
- M16 NONCOMBUSTIBLE WALL CONSTRUCTION BEHIND TYPE I KITCHEN HOODS. REFER TO SHEET A1.0 FOR MORE INFORMATION.
- M17 ONE INCH DOOR UNDERCUT TRANSFER AIR TO CLOSET (375 CFM). SEE ARCH PLANS FOR LOUVERED DOOR SCHEDULE.
- M18 MECHANICAL CONTRACTOR TO PROVIDE 4x12 LOUVERED RETURN AIR BEHIND EACH RECESSED MENU BOARD. SEE ARCHITECTURAL PLANS, DETAIL 14/A3.1. AND AIR DEVICE SCHEDULE (R-2) ON SHEET M4.1.

2021 IMC SECTION 403.3 - VENTILATION SCHEDULE

UNIT	AREA SERVED	AREA FT² (Az)	CFM/PERSON (Rp)	CFM/FT² (Ra)	PEOPLE OR PEOPLE/1000 FT² (Pz)	UNCORRECTED REQUIRED O/A CFM (Vbz)	Ez*	Ev**	REQUIRED O/A CFM (Vot)***	ACTUAL O/A CFM	REQUIRED EXHAUST CFM	ACTUAL EXHAUST CFM
RTU-1	PRESENTER	343	5	0.06	4	41	0.8	0.98				
	KITCHEN	714	7.5	0.18	18	-	0.8					
						305			311	1700		
RTU-2	SUPPORT	603	0	0.12	0	72	0.8	0.84	-	-		
	MANAGER'S OFFICE	60	5	0.06	1	9	0.8		-	-		
	CREW ROOM	96	5	0.06	5	30	0.8		-	-		
	ORDER	140	5	0.06	7	43	0.8		-	-		
						154			183	800		
RTU-3	DINING	1284	7.5	0.18	90	905	0.8	0.91	-	-		
	VESTIBULE 1	57	0	0.06	0	3	0.8		-	-		
	VESTIBULE 2	44	0	0.06	0	3	0.8		-	-		
	WOMEN'S	135	0	0.06	0	8	0.8		-	-		
	MEN'S	122	0	0.06	0	7	0.8		-	-		
						927			1018	1130		
EF-1, 2 & 3	KITCHEN	714	-	0.7	-	-	-	-	-	-	500	2405
EF-4	WOMEN'S	135	-	-	-	-	-	-	-	-	100	200
	MEN'S	122	-	-	-	-	-		-	-	100	200
EF-5	JANITOR'S CLOSET	19	-	-	-	-	-		-	-	50	75
EF-6	WAREWASHER	-	-	-	-	-	-		-	-	350	600
										TOTAL:	1100	3480

* ZONE AIR DISTRIBUTION EFFECTIVENESS BASED ON ASHRAE 62.1 TABLE 6.2 FOR CEILING SUPPLY PF WARM AIR 15° F OR MORE ABOVE SPACE TEMPERATURE AND CEILING RETURN (IMC TABLE 403.3.1.2)
** VENTILATION SYSTEM EFFICIENCY BASED ON ASHRAE 62.1 TABLE 6.3 AND SECTION 6.2.5 (IMC SECTION 403.3.2.3 M2)
*** CORRECTED REQUIRED O/A INTAKE REQUIRED FOR SYSTEM CALCULATED BASED ON ASHRAE 62.1 SECTION 6.2 (IMC SECTION 403.3)

- M19 PROVIDE AIR INTAKE AND FLUE EXHAUST PER MANUFACTURER'S INSTALLATION MANUAL. AIR INTAKE AND FLUE EXHAUST TO COMBINE WITH CONCENTRIC VENT KIT. REFER TO 6/P3.0 FOR FURTHER DETAILS.
- M20 10" TYPE 304 STAINLESS STEEL DUCT FROM TYPE II EXHAUST HOOD UP THROUGH ROOF TO EXHAUST FAN. DUCTWORK SHALL BE PITCHED TOWARDS TYPE II EXHAUST HOOD. EXTERNALLY INSULATE EXHAUST DUCT FROM TYPE II EXHAUST HOOD CONNECTION TO ROOF PENETRATION.

AIR BALANCE SCHEDULE

UNIT	SUPPLY AIR	RETURN AIR	OUTDOOR AIR	EXHAUST AIR	PRESSURE
RTU-1	7200	5500	1700		1700
RTU-2	2400	1600	800		800
RTU-3	5000	3870	1130		1130
EF-1				1350	-1350
EF-2				575	-575
EF-3				480	-480
EF-4				400	-400
EF-5				75	-75
EF-6				600	-600
TOTALS	14600	10970	3630	3480	150

NOTES:
1. BALANCING TOLERANCES ARE AS FOLLOWS:
   HOODS: 0% TO +10%
   OUTDOOR AIR: 0% TO +10%
   SUPPLY AND RETURN AIR DIFFUSERS: -10% TO +10%
   TOILET EXHAUST AIR: -10% TO +10%
2. BALANCE ROOFTOP UNIT SUPPLY AND RETURN AIR PRIOR TO TURNING ON EXHAUST FANS.
3. EXHAUST HOODS SHALL BE BALANCED WITH A 4" VANE ANEMOMETER.
4. RTU BLOWER TO RUN CONTINUOUSLY DURING OCCUPIED HOURS. REFER TO SEQUENCE OF OPERATIONS ON M1.0 AND E3.2 FOR HOOD/FAN INTERLOCK DETAILS.
5. EF-6 DOES NOT RUN CONTINUOUSLY - VALUES SHOWN IN AIR BALANCE SCHEDULE REFLECT OPERATIONAL STATE. WHEN EF-6 IS NOT OPERATIONAL, RTU-2 SHALL BE DECREASED BY 600 CFM ACCORDINGLY. REFER TO M1.0 FOR ADDITIONAL DETAILS OF SEQUENCE OF OPERATIONS AND INTERLOCKING REQUIREMENTS.

HEATING SCHEDULE

EQUIPMENT	INPUT (BTU/HR)	OUTPUT (BTU/HR)	REQUIRED HEAT (BTU/HR)
ROOFTOP UNIT (RTU-1)	250,000	202,500	146,329
ROOFTOP UNIT (RTU-2)	150,000	121,500	73,041
ROOFTOP UNIT (RTU-3)	250,000	202,500	115,016
TOTALS		526,500	334,386

LINGLE DESIGN GROUP INC
158 WEST MAIN STREET
LENA, IL 61048
815.369.9155
1764 BLAKE ST
DENVER, CO 8020
303.974.5873
WWW.LINGLEDESIGN.COM

WCW Engineers, Inc.
760 Creel Drive
Wood Dale, Illinois 60191
Tel. 630/595-8800
Fax 630/595-8818
www.WCWengineers.com

© ALL DRAWINGS AND WRITTEN MATERIAL CONTAINED HEREIN ARE THE PROPERTY OF THE LINGLE DESIGN GROUP, INC. THEY MAY NOT BE REVISED, COPIED, REUSED, OR DISCLOSED IN ANY MANNER WITHOUT WRITTEN AUTHORIZATION FROM THE ARCHITECT.

LICENSE EXPIRATION: APR 30, 2027

JOSEPH G. THOMAS LICENSED 16129 KANSAS PROFESSIONAL ENGINEER

DATE ISSUED: JUN 22, 2026

STATE ID: 150404
PROJECT #: 26-028
NATIONAL #: 44655
DRAWN BY: SC
CHECKED BY: JT

DATE:
04/08/26 - PERMIT / BID SET

REVISIONS
1. 05/07/26 - QC COMMENTS/ADA UPDATE
2. 06/22/26 - CITY COMMENTS / DECOR

CLIENT
McDonald's USA, LLC

PROTOTYPE
BB20 4584 WW-HB
ISSUE DATE 02/25

ADDRESS
707 1/2 METROPOLITAN AVE
LEAVENWORTH, KS 66048

SHEET TITLE
DUCTWORK PLAN

SHEET NUMBER:
M1.2

H:\26113\Dwg\MECH.dwg, M1-2-Flex, 6/19/2026 10:42:32 AM, 1:1

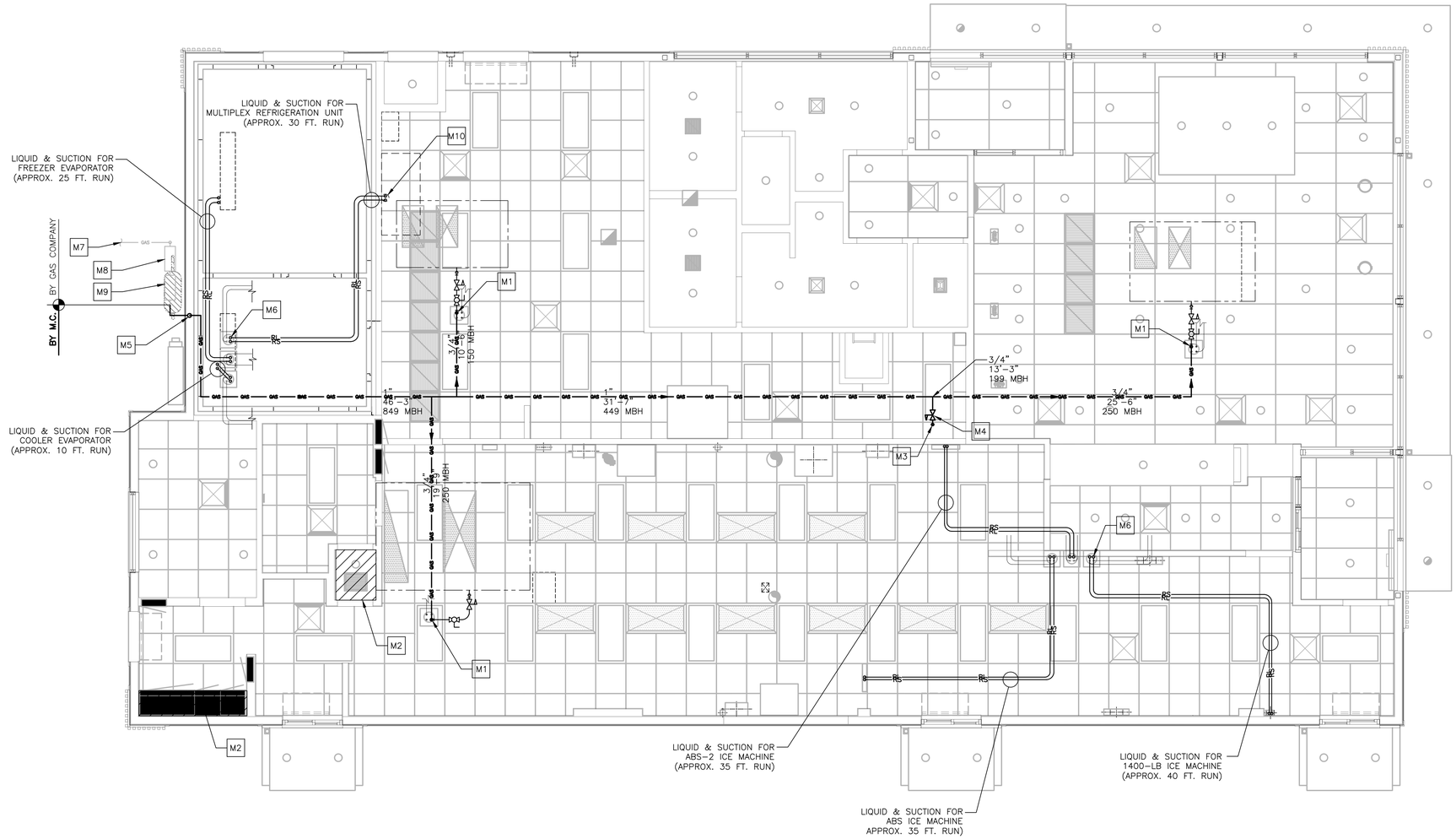

1 / M1.4 MECHANICAL PIPING PLAN
1/4"=1'-0"

DRAWING NOTES

1. GAS PIPING LENGTHS ARE APPROXIMATE AND ARE SHOWN FOR SIZING PURPOSES ONLY.
2. REFRIGERANT PIPE SIZES SHALL BE PER MANUFACTURER'S INSTALLATION INSTRUCTIONS.

KEYED NOTES

- M1 GAS PIPE UP THROUGH ROOF TO RTU.
- M2 UTILITIES SHALL NOT BE ROUTED ABOVE TECH. CLOSET. OR SWITCHGEAR.
- M3 GAS PIPE DOWN TO WATER HEATER – APPROX. 10 FT. DROP
- M4 SIZE REGULATOR PROPERLY FOR APPLICATION – SET GAS PRESSURE REGULATOR OUTLET PRESSURE TO 10" W.C. AND PROVIDE VENT THROUGH ROOF AS REQUIRED.
- M5 GAS PIPE UP IN WALL – APPROX. 10 FT. RISE
- M6 REFRIGERANT LIQUID AND SUCTION LINES UP THROUGH ROOF TO CONDENSING UNITS (TYP. 6 PLACES – SEE DETAIL 3 ON DRAWING M3.0)
- M7 INCOMING SERVICE LINE – SEE GAS PIPING NOTES ON DRAWING M4.0
- M8 INCOMING SERVICE REGULATOR SET TO 2 PSIG.
- M9 INCOMING SERVICE METER – SEE GAS LOAD SCHEDULE FOR SIZING
- M10 REFRIGERANT LINES DOWN TO SODA SYSTEM (MULTIPLEX).

GAS LOAD SCHEDULE

EQUIPMENT	INPUT (BTU/HR)	GAS FLOW (1,000 BTU/CF) (CF/HR)
ROOFTOP UNIT (RTU-1)	250,000	250
ROOFTOP UNIT (RTU-2)	150,000	150
ROOFTOP UNIT (RTU-3)	250,000	250
WATER HEATER (WH-1)	199,999	199.999
TOTAL	849,999	849.999

PIPING KEY

1 1/2" — PIPE SIZE
10'-11" — PIPE LENGTH
1010 MBH — LOADING ON PIPE LENGTH

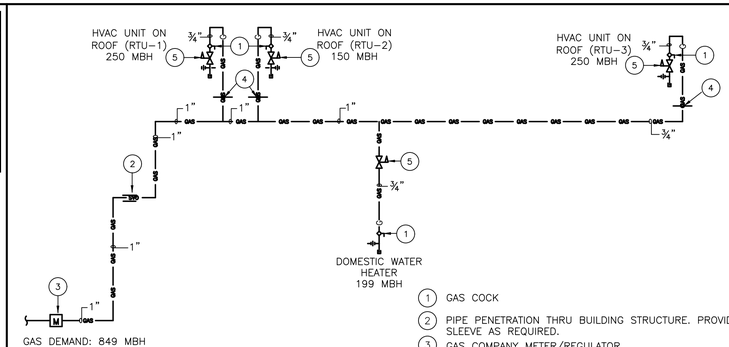

GAS RISER DIAGRAM

NOT TO SCALE

1. GAS COCK
2. PIPE PENETRATION THRU BUILDING STRUCTURE. PROVIDE PIPE SLEEVE AS REQUIRED.
3. GAS COMPANY METER/REGULATOR
4. GAS PIPING UP THRU THE ROOF. COORDINATE PIPE ROOF PENETRATION WITH AC UNIT LOCATION IN THE FIELD.
5. GAS REGULATOR (SEE DETAIL 4/M3.0)

LINGLE DESIGN GROUP INC
158 WEST MAIN STREET
LENA, IL 61048
815.369.9155
1764 BLAKE ST
DENVER, CO 8020
303.974.5873
www.LINGLEDESIGN.COM

WCW Engineers, Inc.
760 Creel Drive
Wood Dale, Illinois 60191
Tel. 630/595-8800
Fax 630/595-8818
www.WCWengineers.com

© ALL DRAWINGS AND WRITTEN MATERIAL CONTAINED HEREIN ARE THE PROPERTY OF THE LINGLE DESIGN GROUP, INC. THEY MAY NOT BE REVISED, COPIED, REUSED, OR DISCLOSED IN ANY MANNER WITHOUT WRITTEN AUTHORIZATION FROM THE ARCHITECT.

LICENSE EXPIRATION: APR 30, 2027

JOSEPH G. THOMAS LICENSED 16129 KANSAS PROFESSIONAL ENGINEER

DATE ISSUED: JUN 22, 2026

STATE ID: 150404
PROJECT #: 26-028
NATIONAL #: 44655
DRAWN BY: SC
CHECKED BY: JT

DATE:
04/08/26 - PERMIT / BID SET

REVISIONS
1. 05/07/26 - QC COMMENTS/ADA UPDATE
2. 06/22/26 - CITY COMMENTS / DECOR

CLIENT
McDonald's USA, LLC

PROTOTYPE
BB20 4584 WW-HB
ISSUE DATE 02/25

ADDRESS
707 1/2 METROPOLITAN AVE
LEAVENWORTH, KS 66048

SHEET TITLE
MECH. PIPING PLAN

SHEET NUMBER:
M1.4

H:\26113\Dwg\MECH.dwg, M1-4, 6/19/2026 10:42:38 AM, 1:1

HOOD INFORMATION

HOOD NO.	TAG	MODEL	LENGTH	MAX. COOKING TEMP.	APPLIANCE DUTY	DESIGN CFM/ft	TOTAL EXH. CFM	EXHAUST PLENUM RISERS(S)						HOOD CONSTRUCTION	HOOD CONFIG.	
								WIDTH	LENG.	HEIGHT	DIA.	CFM	VEL.	S.P.		END TO END	ROW
1	DISH	CLASS 2	48"	NA	DISH	150	600			4"	10"	600	1100	-0.25"	304 SS	ALONE	ALONE

HOOD OPTIONS

HOOD NO.	TAG	OPTION
1	DISH	FASCIA PANEL 14.00" HIGH FRONT, LEFT, RIGHT (FASCIA HEIGHT INCREASES FOR TALLER CEILING)

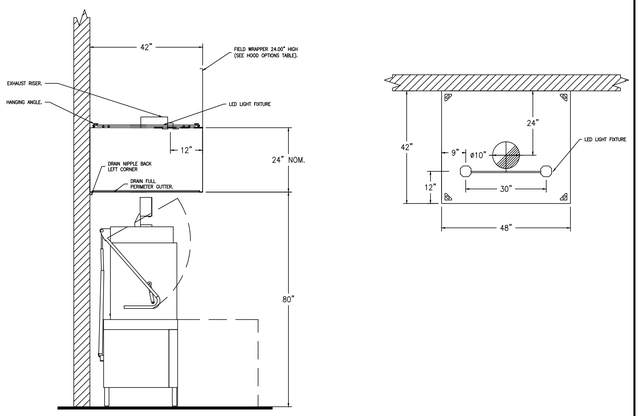

KITCHEN EXHAUST HOOD (TYPE II)

TAG: KH-4 (SEE KITCHEN EXHAUST HOOD SCHEDULE)
N.T.S.

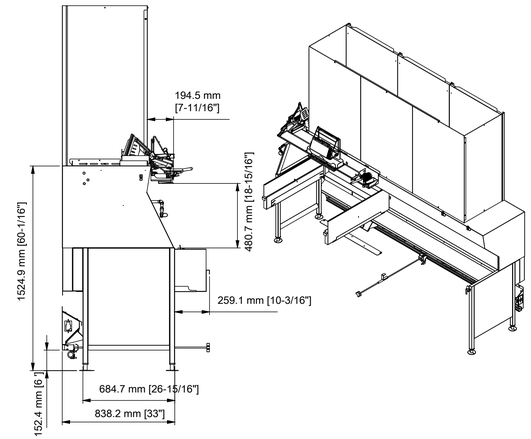

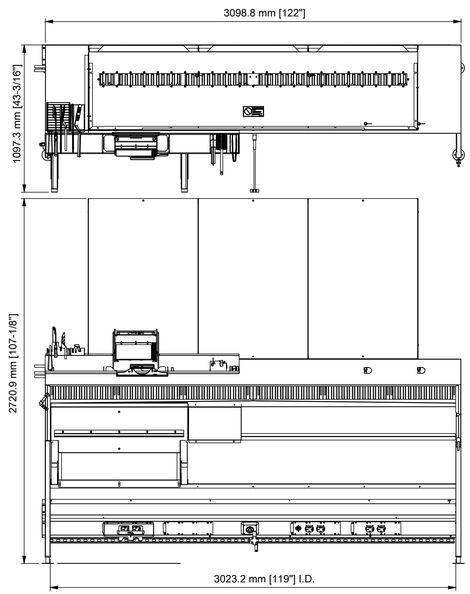

KITCHEN EXHAUST HOOD (TYPE I)

TAG: KH-1 (SEE KITCHEN EXHAUST HOOD SCHEDULE)
SCALE: ½"=1'-0"

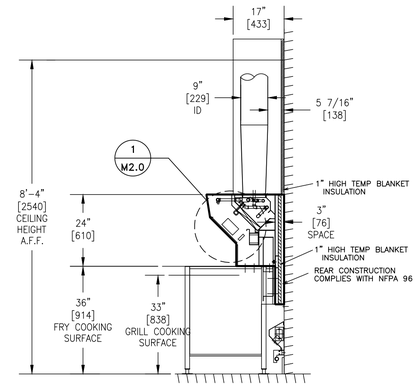

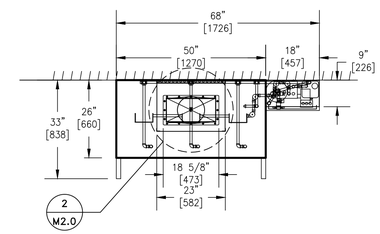

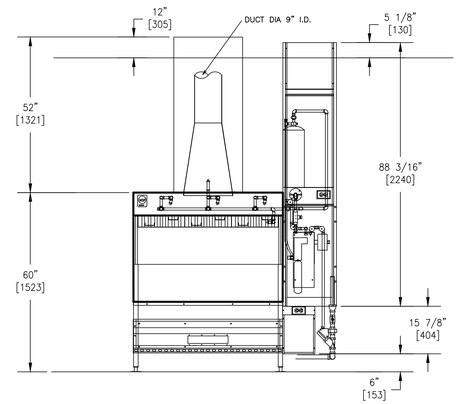

KITCHEN EXHAUST HOOD (TYPE I)

TAG: KH-2 (SEE KITCHEN EXHAUST HOOD SCHEDULE)
SCALE: ½"=1'-0"

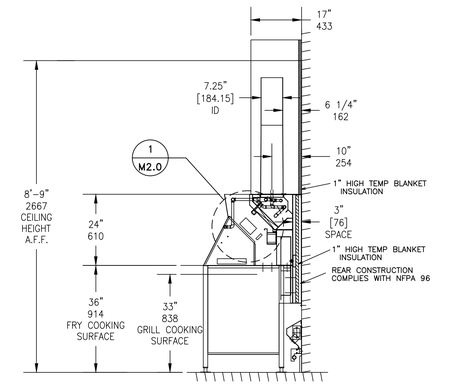

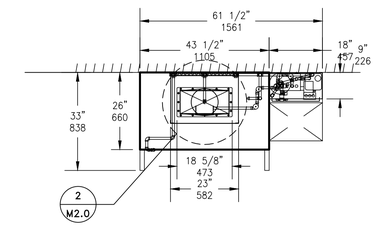

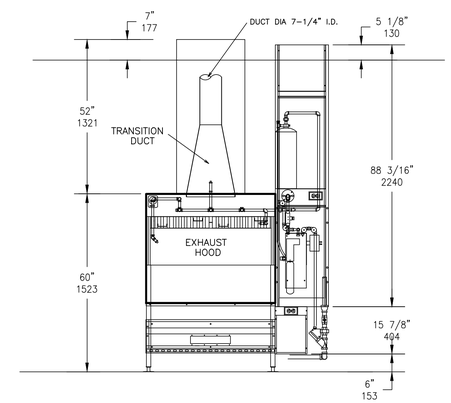

KITCHEN EXHAUST HOOD (TYPE I)

TAG: KH-3 (SEE KITCHEN EXHAUST HOOD SCHEDULE)
SCALE: ½"=1'-0"

DRAWING NOTES

1. 16 GA. STAINLESS STEEL MATERIAL USED FOR HOOD CONSTRUCTION
2. FILTER BAFFLE:
   UL FILE R14372, VOL. 1, SEC. 1
   UL CONTROL NUMBER 5L65
   MEA-446-92-M
3. EXHAUST HOOD:
   UL FILE MH12755, VOL. 4
   UL CONTROL NUMBER 78L1
4. UTILITY CHASE AND RACEWAY:
   UL FILE E163328, VOL.1, SEC.3
5. HIGH TEMP GASKET:
   UL FILE MH12755, VOL. 2, SEC. 1, ILL. 9
6. HOOD CONSTRUCTION COMPLIES WITH NSF STANDARD 2
7. HOOD PERFORMANCE TESTED IN ACCORDANCE WITH UL 710
8. UL 300 AND NFPA 17A COMPLIANT R-102 WET CHEMICAL SYSTEM INCLUDED WITH HOOD INSTALLATION
9. ANSUL CONNECTIONS AND STARTUP BY APPROVED ANSUL REPRESENTATIVE
10. REFER E3.2 FOR HOOD/FAN INTERLOCK DETAILS
11. CAPTURE JET PLENUMS ARE TO BE ATTACHED WHEN CALLED OUT PER KITCHEN SCHEDULE.

DETAIL

UL LABEL
SCALE: NONE

1
M2.0

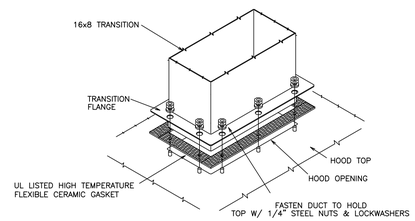

DETAIL

HOOD CONNECTION
SCALE: NONE

2
M2.0

LINGLE DESIGN GROUP INC
158 WEST MAIN STREET
LENA, IL 61048
815.369.9155
1764 BLAKE ST
DENVER, CO 8020
303.974.5873
WWW.LINGLEDESIGN.COM

WCW Engineers, Inc.
760 Creel Drive
Wood Dale, Illinois 60191
Tel. 630/595-8800
Fax 630/595-8818
www.WCWengineers.com

© ALL DRAWINGS AND WRITTEN MATERIAL CONTAINED HEREIN ARE THE PROPERTY OF THE LINGLE DESIGN GROUP, INC. THEY MAY NOT BE REVISED, COPIED, REUSED, OR DISCLOSED IN ANY MANNER WITHOUT WRITTEN AUTHORIZATION FROM THE ARCHITECT.

LICENSE EXPIRATION: APR 30, 2027

JOSEPH G. THOMAS LICENSED 16129 KANSAS PROFESSIONAL ENGINEER

DATE ISSUED: JUN 22, 2026

STATE ID: 150404
PROJECT #: 26-028
NATIONAL #: 44655
DRAWN BY: SC
CHECKED BY: JT

DATE:
04/08/26 - PERMIT / BID SET

REVISIONS
1 05/07/26 - QC COMMENTS/ADA UPDATE
2 06/22/26 - CITY COMMENTS / DECOR

CLIENT
McDonald's USA, LLC

PROTOTYPE
BB20 4584 WW-HB
ISSUE DATE 02/25

ADDRESS
707 1/2 METROPOLITAN AVE
LEAVENWORTH, KS 66048

SHEET TITLE
EXHAUST HOODS

SHEET NUMBER:
M2.0

H:\26113\Dwg\MECH.dwg, M2-0, 6/19/2026 10:42:43 AM, 1:1

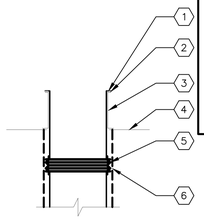

KEYED NOTES:
1. SHEET METAL DUCT DROP (SUPPLY, RETURN OR EXHAUST)
2. FOAM GASKET BETWEEN DUCT AND CURB
3. ROOF CURB
4. ROOF LINE
5. 6" FACE–TO–FACE CANVAS FLEXIBLE CONNECTION
6. 2" EXTERIOR INSULATION (SUPPLY AND RETURN)

DETAIL 1 / M3.0
DUCT DROP INSTALLATION
SCALE: NONE

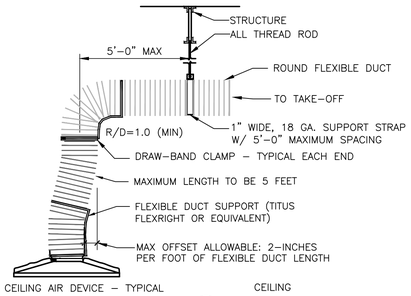

DETAIL 2 / M3.0
DIFFUSER/GRILLE CONNECTION
SCALE: NONE

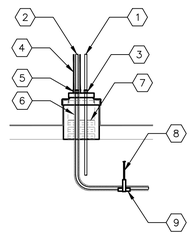

KEYED NOTES:
1. REFRIGERANT LIQUID LINE
2. REFRIGERANT SUCTION LINE WITH 1" THICK EXTERNAL FOAM INSULATION (ARMAFLEX BY ARMACELL OR EQUAL)
3. STAINLESS STEEL CLAMP
4. APPLY WEATHERPROOFING OVER FOAM INSULATION (ALUMAGUARD BY POLYGUARD OR EQUAL)
5. WRAP FOAM INSULATION OVER PIPE PORTAL NIPPLE AND STAINLESS STEEL CLAMP
6. RESTART FOAM INSULATION IMMEDIATELY AFTER PIPE PORTAL PENETRATION
7. INSULATE BOTTOM OF ROOF PORTAL CURB (MIN. R–19)
8. PIPE HANGER
9. LIGHT GAUGE GALVANIZED STEEL PROTECTIVE SHIELD

DETAIL 3 / M3.0
REFRIGERANT PIPE INSTALLATION
SCALE: NONE

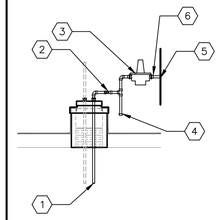

KEYED NOTES:
1. GAS PIPING
2. SHUT–OFF VALVE
3. PRESSURE REGULATOR (PROPERLY SIZED FOR APPLICATION)
4. DIRT LEG
5. ROOFTOP UNIT ENTRY
6. UNION (TYP.)

DETAIL 4 / M3.0
GAS PIPE INSTALLATION
SCALE: NONE

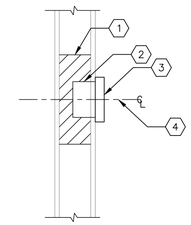

KEYED NOTES:
1. PROVIDE BATT INSULATION FOR TEMPERATURE SENSORS INSTALLED IN HOLLOW CAVITY WALLS
2. 2x4 ELECTRICAL BOX
3. SENSOR (TEMPERATURE, HUMIDITY OR CO2)
4. MOUNT SENSOR(S) BETWEEN 4'–0" TO 4'–6" A.F.F.

DETAIL 5 / M3.0
REMOTE SENSOR INSTALLATION
SCALE: NONE

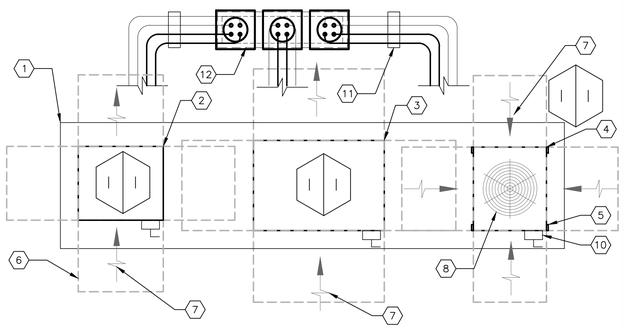

KEYED NOTES:
1. 180"Lx43"Wx14"H EQUIPMENT PLATFORM MANUFACTURED BY RPS OR EQUAL
2. 28½"Lx24¾"Wx19¾"H CONDENSING UNIT (COOLER).
3. 43⅞"Lx30½"Wx29¾"H CONDENSING UNIT (FREEZER).
4. 29"Lx24½"Wx34"H CONDENSING UNIT (MULTIPLEX).
5. FASTEN CONDENSING UNIT TO TOP OF PLATFORM AND SEAL FASTENER PENETRATIONS WITH UV RESISTANT SEALANT
6. OUTLINE OF SERVICE CLEARANCE EXTENDING 3'–0" FROM CONDENSING UNIT ON ALL SIDES
7. CONDENSER AIR INTAKE
8. CONDENSER FAN OUTLET ON TOP OF UNIT
9. CONDENSER FAN OUTLET ON SIDE OF UNIT
10. DISCONNECT SWITCH FURNISHED WITH UNIT
11. PROVIDE PIPE SUPPORT AS REQUIRED (TREATED LUMBER IS NOT ACCEPTABLE)
12. MULTIPLE PIPE PORTAL MANUFACTURED BY RPS OR EQUAL

CONDUIT SIZES: (PER CONDENSING UNIT
(1) ¾" POWER
(1) ¾" CONTROL

REFRIGERANT PIPING SIZES:
SEE MANUFACTURER'S INSTALLATION INSTRUCTIONS FOR RECOMMENDED REFRIGERANT PIPE SIZING

DETAIL 6 / M3.0
REMOTE CONDENSER UNITS (CU–4, CU–5 & CU–6)
SCALE: ½"=1'–0"

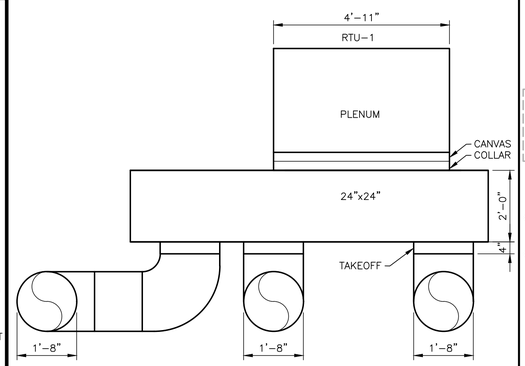

DETAIL 7 / M3.0
VIEW TOWARDS REAR OF KITCHEN AT DUCT DROPS
SCALE: ½"=1'–0"

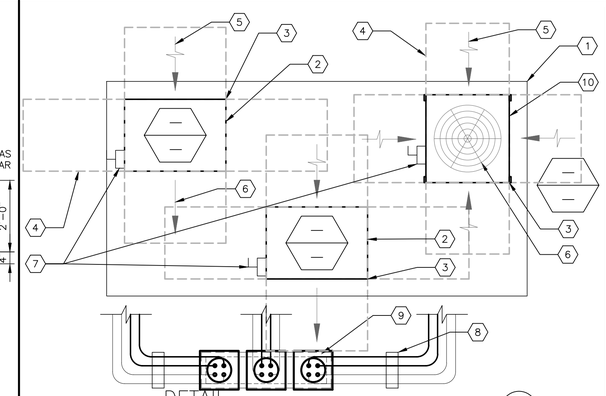

DETAIL 7B / M3.0
REMOTE CONDENSER UNIT (CU–1, CU–2 & CU–3)
SCALE: ½"=1'–0"

KEYED NOTES:
1. 141"x72"x14"H EQUIPMENT PLATFORM MANUFACTURED BY RPS OR EQUAL
2. 34"x24⅛"x25¾"H CONDENSING UNIT
3. FASTEN CONDENSING UNIT TO TOP OF PLATFORM AND SEAL FASTENER PENETRATIONS WITH UV RESISTANT SEALANT
4. OUTLINE OF SERVICE CLEARANCE EXTENDING FROM CONDENSING UNIT ON ALL SIDES
5. CONDENSER AIR INTAKE
6. CONDENSER FAN OUTLET
7. DISCONNECT SWITCH PROVIDED BY ELECTRICAL CONTRACTOR
8. PROVIDE PIPE SUPPORT AS NECESSARY (TREATED LUMBER IS NOT ACCEPTABLE)
9. MULTIPLE PIPE PORTAL MANUFACTURED BY RPS OR EQUAL
10. 29½"x28"x38"H CONDENSING UNIT

CONDUIT SIZES: (PER CONDENSING UNIT)
(1) ¾" POWER
(1) ¾" CONTROL

REFRIGERANT PIPING SIZES:
(PER CONDENSING UNIT)
ICE MACHINE – ½" LIQUID, ¾" SUCTION
(CU–3 CONDENSING UNIT)
ICE MACHINE – ⅜" LIQUID, ½" SUCTION

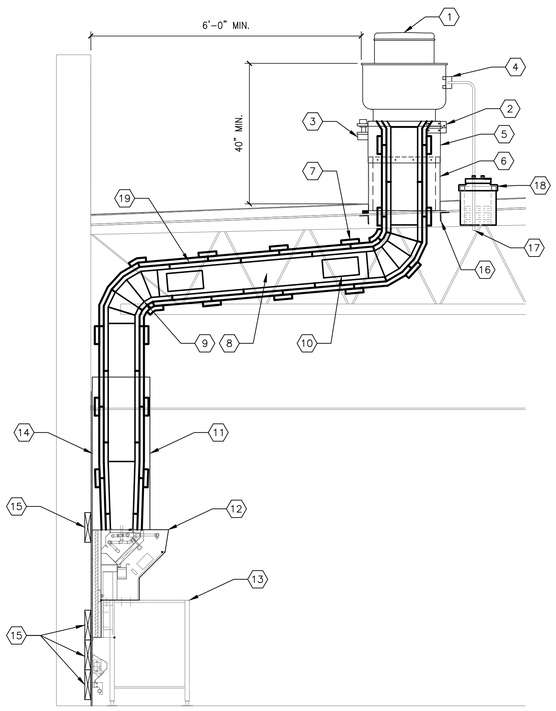

KEYED NOTES:
1. UPBLAST EXHAUST FAN (SEE EXHAUST FAN SCHEDULE)
2. HINGED CURB CAP FOR CLEANING ACCESS (FURNISHED WITH FAN)
3. GREASE TRAP (FURNISHED WITH FAN)
4. NEMA 3R DISCONNECT SWITCH (FURNISHED WITH FAN)
5. 12" HIGH CURB EXTENSION (FURNISHED WITH FAN)
6. 18" HIGH CURB (FURNISHED WITH FAN)
7. TWO (2) LAYERS OF 1½" THICK DUCT WRAP TO MEET ASTM E2336 INSTALLED PER MANUFACTURER'S INSTRUCTIONS (SEE MECHANICAL NOTES FOR INSULATION SPECIFICATION)
8. 16 GAUGE BLACK IRON (CARBON STEEL) OR 18 GAUGE STAINLESS STEEL DUCTWORK WELDED LIQUID–TIGHT
9. 5–GORE BLACK IRON (CARBON STEEL) RADIUS ELBOW
10. 12"x6" ACCESS DOOR AT ALL CHANGES IN DIRECTION
11. STAINLESS STEEL FASCIA PANEL TO PROTECT DUCTWORK AND INSULATION
12. BACKSHELF TYPE EXHAUST HOOD (SEE KITCHEN EXHAUST HOOD SCHEDULE)
13. COOKING APPLIANCE (SEE KITCHEN DRAWINGS)
14. REAR WALL CONSTRUCTION SHALL CONSIST OF CERAMIC TILE OR MIN. 22 GAUGE STAINLESS STEEL OVER ⅝" TYPE X GYPSUM BOARD OR ½" CEMENT BOARD FROM FLOOR TO CEILING AND EXTENDING 24" TO EACH SIDE OF THE HOOD INSTALLED ON NON–COMBUSTIBLE WALL (REFER TO SHEET A1.0 FOR MORE INFORMATION.
15. 2x10 LIGHT GAUGE STEEL FOR SUPPORT BLOCKING FOR HOOD AND RACEWAY (COORDINATE INSTALLATION WITH HOOD INSTALLER)
16. STRUCTURAL FRAMING FOR ROOF OPENING (SEE STRUCTURAL DRAWINGS)
17. TRANSITION TO FLEXIBLE CONDUIT UNDER ROOF PENETRATION WHERE ALLOWED BY CODE.
18. ROOF PIPE PORTAL, RPS–N18(1) RC–2A 12x12x11H.
19. ¼" PER FOOT SLOPE PITCHED BACK TOWARDS THE HOOD.

SECTION 8 / M3.0
KITCHEN EXHAUST HOOD INSTALLATION
SCALE: ½"=1'–0"

KEYED NOTES:
1. OUTLINE OF ROOFTOP UNIT
2. ROOF CURB
3. SUPPLY AND RETURN AIR DUCT DROPS
4. ROOF OPENING

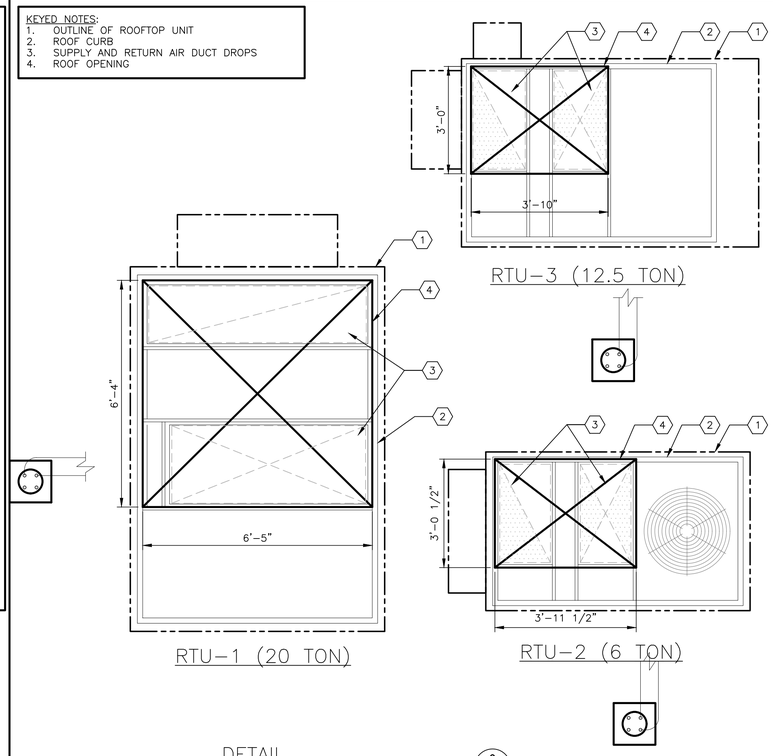

DETAIL 9 / M3.0
ROOF OPENINGS
SCALE: ½"=1'–0"

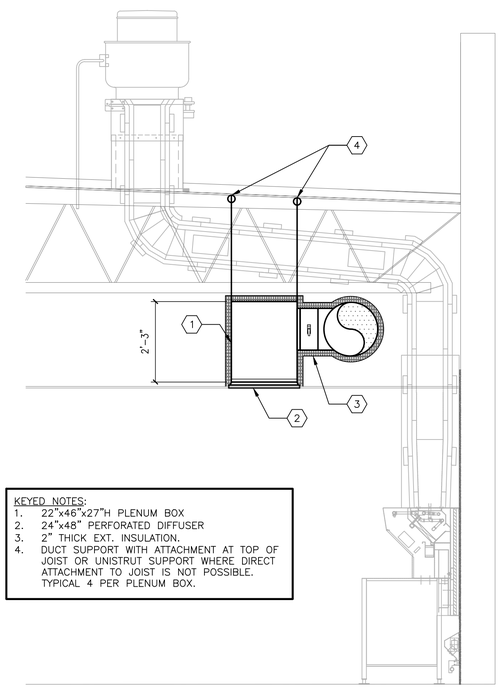

KEYED NOTES:
1. 22"x46"x27"H PLENUM BOX
2. 24"x48" PERFORATED DIFFUSER
3. 2" THICK EXT. INSULATION.
4. DUCT SUPPORT WITH ATTACHMENT AT TOP OF JOIST OR UNISTRUT SUPPORT WHERE DIRECT ATTACHMENT TO JOIST IS NOT POSSIBLE. TYPICAL 4 PER PLENUM BOX.

SECTION 10 / M3.0
SUPPLY (S–1) PLENUM INSTALLATION
SCALE: ½"=1'–0"

LINGLE DESIGN GROUP INC
158 WEST MAIN STREET
LENA, IL 61048
815.369.9155
1764 BLAKE ST
DENVER, CO 8020
303.974.5873
WWW.LINGLEDESIGN.COM

WCW Engineers, Inc.
760 Creel Drive
Wood Dale, Illinois 60191
Tel. 630/595-8800
Fax 630/595-8818
www.WCWengineers.com

© ALL DRAWINGS AND WRITTEN MATERIAL CONTAINED HEREIN ARE THE PROPERTY OF THE LINGLE DESIGN GROUP, INC. THEY MAY NOT BE REVISED, COPIED, REUSED, OR DISCLOSED IN ANY MANNER WITHOUT WRITTEN AUTHORIZATION FROM THE ARCHITECT.

LICENSE EXPIRATION: APR 30, 2027

JOSEPH G. THOMAS
LICENSED
16129
KANSAS
PROFESSIONAL ENGINEER

DATE ISSUED: JUN 22, 2026

STATE ID: 150404
NATIONAL #: 44655
PROJECT #: 26-028
DRAWN BY: SC
CHECKED BY: JT

DATE:
04/08/26 - PERMIT / BID SET

REVISIONS
1 05/07/26 - QC COMMENTS/ADA UPDATE
2 06/22/26 - CITY COMMENTS / DECOR

CLIENT
McDonald's USA, LLC

PROTOTYPE
BB20 4584 WW-HB
ISSUE DATE 02/25

ADDRESS
707 1/2 METROPOLITAN AVE
LEAVENWORTH, KS 66048

SHEET TITLE
DETAILS

SHEET NUMBER:
M3.0

H:\26113\Dwg\MECH.dwg, M3-0, 6/19/2026 10:42:48 AM, 1:1

MECHANICAL NOTES

GENERAL:

1. ALL WORK PERFORMED SHALL BE IN ACCORDANCE WITH ALL LOCAL CODES AND ACCEPTABLE TO THE AUTHORITY HAVING JURISDICTION.
2. ALL DIMENSIONS, CLEARANCES AND TOLERANCES SHALL BE VERIFIED PRIOR TO INSTALLATION.
3. ALL MATERIALS, FIXTURES AND EQUIPMENT USED SHALL BE IN ACCORDANCE WITH McDONALD'S SPECIFICATIONS. SPECIFICATIONS ARE CONTAINED WITHIN THESE DRAWINGS AND THE McDONALD'S PROJECT MANUAL. ANY CONTRACTOR IN NEED OF A COPY OF THE McDONALD'S PROJECT MANUAL SHALL CONTACT THE McDONALD'S AREA CONSTRUCTION MANAGER. ANY VARIANCE FROM THE McDONALD'S SPECIFICATIONS SHALL BE REVIEWED AND APPROVED BY THE ENGINEER-OF-RECORD.
4. ALL EQUIPMENT SHALL BE INSTALLED IN ACCORDANCE WITH ITS LISTING AND/OR THE MANUFACTURER'S INSTALLATION INSTRUCTIONS.
5. SEE COORDINATION SCHEDULE FOR ADDITIONAL SCOPE OF WORK.
6. PRIOR TO BUILDING TURNOVER, A COMPLETE START-UP, TEST, ADJUST AND BALANCE SHALL BE PERFORMED ON ALL MECHANICAL SYSTEMS. THIS WORK SHALL BE PERFORMED BY A CERTIFIED TEST AND BALANCE CONTRACTOR. A CERTIFIED TEST AND BALANCE CONTRACTOR CAN BE FOUND BY VISITING:
   HTTP://WWW.AABCHQ.COM/DIRECTORY
   HTTP://WWW.NEBB.ORG/DIRECTORY.HTM
   HTTP://WWW.TABBCERTIFIED.ORG/SITE/CONTENT/CONTRACTORS/SEARCH
7. UPON COMPLETION OF THE PUNCHLIST, THE MECHANICAL CONTRACTOR AND TEST AND BALANCE CONTRACTOR SHALL SUBMIT REDLINED OR AS-BUILT DRAWINGS ALONG WITH THE TEST AND BALANCE REPORT AND ALL EQUIPMENT OPERATION AND MAINTENANCE MANUALS TO THE McDONALD'S AREA CONSTRUCTION MANAGER. A MINIMUM OF TWO (2) COPIES SHALL BE PROVIDED, ONE (1) FOR REGIONAL RECORDS AND ONE (1) FOR THE RESTAURANT.
8. ALL PENETRATIONS OF FIRE-RATED WALLS SHALL BE FIRESTOPPED WITH AN APPROVED AND LISTED FIRESTOPPING SYSTEM.

VENTILATION SYSTEMS:

1. ALL SHEET METAL DUCTWORK SHALL BE FABRICATED AND INSTALLED IN ACCORDANCE WITH LOCAL CODES AND SMACNA STANDARDS.
2. ALL DUCTWORK DIMENSIONS ARE INTERNAL FREE AREA DIMENSIONS AND SIZED FOR 0.08" W.C. PER 100 FT. OF DUCT.
3. ALL SHEET METAL DUCTWORK SHALL BE CONSTRUCTED IN ACCORDANCE WITH SMACNA TABLES FOR 2" W.C. AND SHALL BE SUPPORTED WITH AN APPROVED HANGER AT INTERVALS NOT EXCEEDING 10 FT.
4. ALL DUCT DROPS INTO THE BUILDING SHALL BE INSTALLED WITH FLEXIBLE CONNECTIONS TO ISOLATE THE DUCTWORK SYSTEM FROM NOISE AND VIBRATION. FLEXIBLE CONNECTIONS SHALL BE TESTED IN ACCORDANCE WITH UL 181 AND LISTED AS CLASS 0 OR CLASS 1.
5. ALL DUCT DROPS INTO THE BUILDING SHALL BE OFFSET AS NECESSARY TO ALLOW FOR THE CLEAR INSTALLATION OF THE EXTERNAL DUCTWORK INSULATION.
6. ALL DUCTWORK BRANCHES THAT SERVE A SINGLE DIFFUSER SHALL BE SUPPLIED WITH A VOLUME DAMPER FOR BALANCING. BRANCHES THAT SERVE MULTIPLE DIFFUSERS, THE BALANCING IS HANDLED VIA REMOTE DAMPER INSTALLED NEAR THE DIFFUSER. REFER TO M1.2 FOR DAMPER LOCATIONS. VOLUME DAMPER SHALL HAVE A 2" OFFSET TO ACCOMMODATE EXTERNAL INSULATION.
7. TAKE-OFFS FROM RECTANGULAR TO ROUND DUCT SHALL BE DUCTMATE STRAIGHT-SIDED OR CENTER HIGH-EFFICIENCY TAKE-OFFS WITH A 2" DAMPER STAND-OFF TO ACCOMMODATE FOR EXTERNAL INSULATION.
8. ALL DUCTWORK JOINTS, LONGITUDINAL AND TRANSVERSE SEAMS SHALL BE SEALED WITH WELDS, GASKETS, MASTICS (ADHESIVES), TAPES, ETC. ALL SEALANT MATERIALS SHALL BE LISTED IN ACCORDANCE WITH UL 181A OR 181B.
9. ALL SUPPLY AND RETURN SHEET METAL DUCTWORK LOCATED WITHIN THE CEILING SPACE SHALL BE EXTERNALLY INSULATED. INSULATION SHALL BE 2" THICK MICROLITE FSK-100 BY JOHNS MANVILLE OR EQUAL.
10. ALL SUPPLY AND RETURN SHEET METAL DUCTWORK LOCATED OUTSIDE OF THE BUILDING SHALL BE INTERNALLY LINED WITH A 1" THICK FIBERGLASS (MIN. R-4.2) AND EXTERNALLY INSULATED WITH A 2" THICK RIGID POLYSTYRENE, POLYURETHANE OR POLYISOCYANURATE BOARD (MIN. R-8 FOR CLIMATE ZONES 1 THROUGH 4), OR A 3" THICK (MIN R-12 FOR CLIMATE ZONES 5 THROUGH 8). INTERNAL FIBERGLASS INSULATION SHALL BE LINATEX BY JOHNS MANVILLE OR EQUAL. EXTERNAL RIGID BOARD INSULATION SHALL BE THERMAPINK BY OWENS CORNING OR EQUAL.
11. FOR APPLICABLE SITUATIONS OR PLAYPLACE ADDITIONS: ALL EXPOSED SPIRAL DUCTWORK SHALL BE INTERNALLY INSULATED TO PREVENT CONDENSATION (MIN. R-4.3). INTERNAL INSULATION SHALL BE 1" THICK SPIRACOUSTIC PLUS BY JOHNS MANVILLE OR EQUAL.
12. ALL DUCTWORK PENETRATIONS THROUGH FIRE-RATED WALLS, BARRIERS OR PARTITIONS SHALL BE PROTECTED WITH A FIRE DAMPER. THE PERIMETER OF THE FIRE DAMPER SHALL BE FIRESTOPPED WITH AN APPROVED AND LISTED FIRESTOPPING MATERIAL.
13. ALL EXTERIOR SHEET METAL DUCTWORK SHALL BE EXTERNALLY WRAPPED WITH AN APPROVED WEATHERPROOFING MATERIAL TO PROTECT AGAINST WATER PENETRATION AND CORROSION. SIDES AND TOP OF EXTERNAL WEATHERPROOFING SHALL BE ALUMAGUARD 60 MIL UV BARRIER BY POLYGUARD OR EQUAL. BOTTOM OF EXTERNAL WEATHERPROOFING SHALL BE VAPORGUARD 5 MIL MEMBRANE BY POLYGUARD OR EQUAL.
14. ALL FLEXIBLE DUCTWORK, METALLIC AND NONMETALLIC, SHALL CONFORM TO THE FOLLOWING:
    A. 2" THICK INSULATION (R-6.0) SEE NOTE#9 AND TABLE(S) BELOW:

DUCT LOCATION: UNCONDITIONED SPACE			CLIMATE ZONES 1 THROUGH 8
DUCTWORK CLASSIFICATION	PRESSURE	SEAL CLASS	INSULATION
SUPPLY	2.00" W.C.	A	TYPE A (R-6)
RETURN	-2.00" W.C.	A	TYPE A (R-6)
EXHAUST	-2.00" W.C.	A	(*)TYPE A (R-6)
HANGER SUPPORTS	EVERY 6 FT.		1" TYPE B

DUCT LOCATION: EXTERIOR (INCLUDES ATTICS ABOVE INSULATED CEILINGS AND CRAWL SPACES.			CLIMATE ZONES 1 THROUGH 4	CLIMATE ZONES 5 THROUGH 8
DUCTWORK CLASSIFICATION	PRESSURE	SEAL CLASS	INSULATION	INSULATION
SUPPLY	2.00" W.C.	A	TYPE A (R-8)	TYPE A (R-12)
RETURN	-2.00" W.C.	A	TYPE A (R-8)	TYPE A (R-12)
EXHAUST	-2.00" W.C.	A	(*)TYPE A (R-8)	(*)TYPE A (R-12)
HANGER SUPPORTS	EVERY 6 FT.		1" TYPE B	

(*) EXHAUST DUCTWORK IS ONLY REQUIRED TO BE INSULATED WITHIN 2-FEET OF ROOF PENETRATION. REFER TO "COMMERCIAL KITCHEN EXHAUST SYSTEMS", NOTE#4 FOR FIRE WRAPPING REQUIREMENTS ON KITCHEN GREASE DUCTWORK.

    B. INTEGRAL VAPOR BARRIER
    C. LISTED AND LABELED UL 181, CLASS 0 OR CLASS 1
    D. INSTALLED IN ACCORDANCE WITH:
       i. SMACNA STANDARDS,
       ii. AIR DIFFUSION COUNCIL INSTALLATION GUIDELINES, AND/OR
       iii. MANUFACTURER'S INSTALLATION INSTRUCTIONS
14. FLEXIBLE DUCTWORK SHALL NOT PENETRATE WALLS. SHEET METAL DUCTWORK IS REQUIRED AT ALL FIRE-RATED AND DRAFTSTOP WALL PENETRATIONS.
15. ALL COVERINGS, LININGS AND ADHESIVES (TAPES, ETC.) SHALL HAVE A FLAME-SPREAD INDEX NOT GREATER THAN 25 AND A SMOKE-DEVELOPED INDEX NOT GREATER THAN 50.
16. DUCT-MOUNTED SMOKE DETECTORS, PROVIDED BY ROOFTOP UNIT MANUFACTURER, SHALL BE INSTALLED IN SYSTEMS WITH DESIGN CAPACITY GREATER THAN 2,000 CFM. SEE MECHANICAL DRAWINGS FOR LOCATIONS OF SMOKE DETECTORS. DUCT-MOUNTED SMOKE DETECTORS ARE NOT REQUIRED WHEN THE BUILDING IS PROTECTED THROUGHOUT BY AREA SMOKE DETECTORS CONNECTED TO A FIRE ALARM SYSTEM WHERE THE FIRE ALARM SYSTEM IS DESIGNED TO SHUT DOWN THE ROOFTOP UNITS.
17. ALL SUPPLY AIR DIFFUSERS SHALL BE INSULATED TO PREVENT CONDENSATION.
18. ALL AIR DEVICES LOCATED IN DRYWALL CEILINGS SHALL BE SUPPLIED WITH AN INTEGRAL VOLUME DAMPER ACCESSIBLE FROM THE AIR DEVICE FACE TO FACILITATE BALANCING.
19. ALL OUTDOOR AIR INTAKES SHALL BE LOCATED A MINIMUM OF 10 FT. HORIZONTALLY FROM ANY SOURCE OF CONTAMINATION SUCH AS EXHAUST FANS, PLUMBING VENTS, WATER HEATER FLUES, ETC. WHERE A CONTAMINANT SOURCE IS LOCATED WITHIN 10 FT. OF AN INTAKE, THE INTAKE OPENING SHALL BE LOCATED A MINIMUM OF 2 FT. BELOW THE CONTAMINANT SOURCE.
20. ALL ROOFTOP CONDENSING UNITS THAT DISCHARGE HORIZONTALLY SHALL BE ORIENTED SUCH THAT THE DISCHARGE DOES NOT BLOW IN THE DIRECTION OF AN OUTDOOR AIR INTAKE.

COMMERCIAL KITCHEN EXHAUST SYSTEMS:

1. ALL METAL DUCTWORK USED FOR THE CONVEYANCE OF GREASE-LADEN AIR SHALL BE CONSTRUCTED OF MINIMUM 18 GAUGE STAINLESS STEEL OR 16 GAUGE CARBON STEEL (BLACK IRON).
2. ALL GREASE EXHAUST DUCTWORK JOINTS SHALL BE EITHER TELESCOPING OR BELL TYPE. BUTT-WELDED JOINTS ARE PROHIBITED.
3. ALL GREASE EXHAUST DUCTWORK SEAMS AND JOINTS SHALL BE CONTINUOUSLY WELDED WATER-TIGHT ON THE EXTERNAL SURFACE OF THE DUCT SYSTEM. ALL WELDING SHALL BE PERFORMED BY A CERTIFIED WELDER.
4. ALL GREASE EXHAUST DUCTWORK SHALL BE EXTERNALLY INSULATED WITH A ASTM E2336 LISTED AND LABELED GREASE DUCT ENCLOSURE SYSTEM. INSULATION SHALL BE INSTALLED IN ACCORDANCE WITH ITS LISTING AND THE MANUFACTURER'S INSTALLATION INSTRUCTIONS.
5. ACCESS PANELS SHALL BE PROVIDED AT ALL CHANGES IN DIRECTION OF THE GREASE EXHAUST DUCTWORK SYSTEM. ACCESS PANELS SHALL BE INSTALLED IN ACCORDANCE WITH THE INSULATION MANUFACTURER'S INSTALLATION INSTRUCTIONS AND SHALL BE LABELED AS FOLLOWS: "ACCESS PANEL - DO NOT OBSTRUCT".
6. ALL HORIZONTAL GREASE EXHAUST DUCTWORK SHALL BE INSTALLED WITH A MINIMUM ¼" PER FOOT SLOPE AND SHALL BE PITCHED BACK TOWARD THE HOOD.
7. UPBLAST KITCHEN EXHAUST FANS SHALL BE LOCATED A MINIMUM OF 6 FT. FROM ANY PARAPET WALL OR ADJACENT STRUCTURE AND SHALL TERMINATE A MINIMUM OF 40 INCHES ABOVE THE FINISHED ROOFING MATERIAL.

REFRIGERANT PIPING:

1. ALL REFRIGERATION WORK SHALL BE PERFORMED BY A CERTIFIED REFRIGERATION CONTRACTOR.
2. ALL REFRIGERANT PIPING SHALL BE SEAMLESS COPPER TUBING OF TYPE L IN ACCORDANCE WITH ASTM B 88 AND ALL JOINTS SHALL BE SOLDERED.
3. ALL REFRIGERANT SUCTION LINES SHALL BE INSULATED WITH A MINIMUM 1" FOAM PIPE INSULATION. PIPE INSULATION INSTALLED OUTDOORS SHALL BE PROTECTED WITH AN APPROVED WEATHERPROOFING MATERIAL.
4. ALL SUSPENDED REFRIGERANT PIPING SHALL BE SUPPORTED AS FOLLOWS:

MATERIAL	MAX. HORIZ. SPACING	MAX. VERT. SPACING
COPPER TUBING ≤1¼"	6 FT.	10 FT.
COPPER TUBING ≥1½"	10 FT.	10 FT.

5. ALL REFRIGERANT PIPING SHALL BE SIZED PER EQUIPMENT MANUFACTURER'S RECOMMENDATIONS.
6. PRE-CHARGED LINESETS ARE NOT PERMITTED AS LINES WILL MOST LIKELY NEED TO BE CUT TO FIT THE APPLICATION AND REFRIGERANT WILL NEED TO BE RECLAIMED.
7. ALL PIPE INSULATION SHALL BE PROTECTED FROM DAMAGE FROM PIPE HANGERS. PROTECTION SHALL BE LIGHT GAUGE GALVANIZED STEEL OR EQUAL.
8. ALL REFRIGERANT PIPING SYSTEMS SHALL BE PRESSURE TESTED FOR LEAKS PRIOR TO START-UP. ALL LEAKS SHALL BE REMEDIED PRIOR TO BUILDING TURNOVER.
9. ALL PIPING SHALL MEET MINIMUM INSULATION THICKNESS PER THE TABLE BELOW:

PIPING	MINIMUM INSULATION THICKNESS (IN INCHES) PER NOMINAL PIPE OR TUBE SIZE				
NOMINAL PIPE SIZE	<1	1 TO 1.5	1.5 TO <4	4 TO <8	≥8
LIQUID (REFRIGERATION) (<40°F)	0.5	1.0	1.0	1.0	1.5
SUCTION (REFRIGERATION) (<40°F)	0.5	1.0	1.0	1.0	1.5

CO2 DETECTION EQUIPMENT:

1. THE CO2 DETECTOR SHALL BE HARD-WIRED TO PREVENT TAMPERING AND SHALL BE INSTALLED AT 12" A.F.F. WITHIN A 5 FT. RADIUS OF THE CO2 STORAGE TANKS.
2. ONE (1) AUDIBLE AND ONE (1) VISUAL ALARM SHALL BE INSTALLED A MINIMUM OF 7 FT. A.F.F., IN PLAIN SIGHT IN THE SAME ROOM AS THE CO2 STORAGE TANKS.
3. ONE (1) AUDIBLE AND ONE (1) VISUAL ALARM SHALL BE INSTALLED A MINIMUM OF 7 FT. A.F.F., AT THE BACK OF THE KITCHEN AND IN PLAIN SIGHT FROM THE MAIN SIDE OF THE PREP LINE.
4. THE CO2 EXTERIOR STROBE SHALL BE INSTALLED AS SHOWN ON SHEET A2.0, (DETAIL 2) AND ON SHEET E1.1. THE INSIDE AUDIBLE AND VISUAL ALARM SHALL BE INSTALLED INSIDE THE CO2 CLOSET, AND IN THE SUPPORT/BACK-OF-THE HOUSE LOCATION AS SHOWN ON SHEETS E1.1 AND E3.0.

NATURAL GAS SYSTEMS:

1. ALL GAS PIPING, WATER HEATER VENTS, INTAKES AND FLUES SHALL CONFORM TO THE CURRENT VERSION OF NFPA 54, NATIONAL FUEL GAS CODE, AND ANY LOCAL CODE REQUIREMENTS.
2. THE NATURAL GAS MAIN PIPE SIZING IS BASED ON THE FOLLOWING:
   A. MINIMUM SUPPLY PRESSURE AT THE METER OF 2 PSIG
   B. 1 PSIG PRESSURE DROP FROM METER TO FARTHEST APPLIANCE
   C. 1,000 BTU PER CU. FT. OF NATURAL GAS
3. GAS PIPING RUN-OUTS TO EQUIPMENT ARE SIZED BASED ON THE FOLLOWING:
   A. SUPPLY PRESSURE AT THE REGULATOR OF 10" W.C. (¾ PSIG)
   B. 0.5" W.C. PRESSURE DROP FROM REGULATOR TO FARTHEST APPLIANCE
   C. 1,000 BTU PER CU. FT. OF NATURAL GAS
4. ALL NATURAL GAS PIPE SHALL BE SCHEDULE 40 CARBON STEEL PIPE WITH MALLEABLE IRON FITTINGS AND SHALL BE COMPLY TO ONE OF THE FOLLOWING STANDARDS: ASME B36.10, 10M; ASTM A 53; OR ASTM A 106.
5. NATURAL GAS PRESSURE REGULATORS SHALL BE MAXITROL 325 SERIES OR EQUAL.
6. ALL SUSPENDED STEEL PIPING SHALL BE SUPPORTED AS FOLLOWS:

SIZE	MAX. HORIZ. SPACING	MAX. VERT. SPACING
½"	6 FT.	6 FT.
¾" TO 1"	8 FT.	8 FT.
≥1¼"	10 FT.	10 FT.

7. GAS PIPING SHALL NOT PENETRATE ANY FIRE-RATED CHASE OR SHAFT, DUCTWORK OR PLENUM.
8. ALL NATURAL GAS PIPING INSTALLED OUTDOORS SHALL BE COATED WITH A CORROSION RESISTANT PAINT. PAINT COLOR SHALL BE ORANGE OR YELLOW.
9. ALL INTAKE AND VENT PIPING FOR SEALED-COMBUSTION WATER HEATERS SHALL BE PVC OR ABS, SHALL BE SIZED AND INSTALLED IN ACCORDANCE WITH THE MANUFACTURER'S INSTRUCTIONS AND SHALL BE INSTALLED BY THE PLUMBING CONTRACTOR.
10. ALL WATER HEATER VENTS SHALL BE LOCATED A MINIMUM OF 10 FT. HORIZONTALLY FROM ANY OUTDOOR AIR INTAKE. WHERE A WATER HEATER VENT IS LOCATED WITHIN 10 FT. OF AN INTAKE, THE FLUE OR VENT SHALL TERMINATE A MINIMUM OF 2 FT. ABOVE THE INTAKE.
11. UPON COMPLETION OF INSTALLATION, THE GAS PIPING SYSTEM SHALL BE PURGED OF DELETERIOUS MATERIAL AND SHALL BE PRESSURE TESTED. PRESSURE TESTING SHALL BE PERFORMED WITH THE EQUIPMENT SHUT-OFF VALVES IN THE CLOSED POSITION TO PROTECT EQUIPMENT FROM DAMAGE DUE TO EXCESSIVE PRESSURE.
12. AFTER THE PRESSURE TEST HAS BEEN COMPLETED AND ANY LEAKS REMEDIED, THE INSTALLING CONTRACTOR SHALL MEASURE AND VERIFY THE FOLLOWING GAS PRESSURES WHILE EQUIPMENT IS IN OPERATION:
    A. GRILL - 6" W.C. NATURAL, 14" W.C. L.P.
    B. FRYER - 6" W.C. NATURAL, 14" W.C. L.P.
    C. WATER HEATER - 6" W.C. NATURAL, 14" W.C. L.P.
    D. HVAC UNIT - 7" W.C. NATURAL, 14" W.C. L.P.
13. IF THE MINIMUM PRESSURES ARE NOT MET, THIS SHALL BE IMMEDIATELY REPORTED TO THE MCDONALD'S AREA CONSTRUCTION MANAGER.

CONDENSATE PIPING:

1. CONDENSATE PIPING SHALL BE GALVANIZED STEEL, COPPER OR PVC.
2. PVC PIPE SHALL BE PAINTED WITH WATER BASED LATEX PAINTING TO RESIST DEGRADATION FROM ULTRAVIOLET EXPOSURE.
3. PIPE SUPPORTS SHALL BE RPS MODEL PMP-2 OR EQUAL. QUANTITY AS REQUIRED DEPENDANT UPON PIPING MATERIAL.
4. PIPING SHALL BE SUPPORTED AS FOLLOWS:

MATERIAL	MAX. HORIZ. SPACING	MAX. VERT. SPACING
COPPER PIPE	12 FT.	10 FT.
GALVANIZED STEEL	12 FT.	15 FT.
PVC	4 FT.	15 FT.

5. CONDENSATE PIPING SHALL SLOPE A MINIMUM OF ⅛" PER FOOT.
6. CONDENSATE PIPING SHALL BE SIZED BASED ON THE FOLLOWING:

TOTAL TONS SERVED BY PIPE	MINIMUM PIPE SIZE
<20 TONS	¾"
>20 TONS, <40 TONS	1"
>40 TONS, <125 TONS	1½"

LEGEND

TS	TEMPERATURE SENSOR
ATS	AVERAGING TEMPERATURE SENSOR
CO2	CO2 SENSOR FOR ROOFTOP UNIT DEMAND CONTROL VENTILATION
HS	HUMIDITY SENSOR
T	THERMOSTAT
2	SMOKE DETECTOR
KH 2	EQUIPMENT TAG
R-1 / 1750 CFM / 18"ø	DIFFUSER INFORMATION LINE 1: TAG LINE 2: AIRFLOW LINE 3: NECK SIZE
	SUPPLY AIR DUCT (VERTICAL)
	RETURN OR EXHAUST AIR DUCT (VERTICAL)
	ROUND DUCT (VERTICAL)
SSC	STEADY-STATE SPEED CONTROLLER
	PLAQUE DIFFUSER (SHADED AREA DESIGNATES BLANK-OFF PANEL LOCATION)
	LINEAR SLOT DIFFUSER
	LOUVERED FACE DIFFUSER
	CEILING-MOUNTED EXHAUST FAN
	SPIN-IN COLLAR WITH VOLUME DAMPER
	VOLUME DAMPER
	FLEXIBLE DUCTWORK
12"ø	SHEET METAL DUCTWORK W/DIA. SIZE
	PERFORATED FACE DIFFUSER
	SHEET METAL TEE WITH CAP

ABBREVIATIONS

ACM	AREA CONSTRUCTION MANAGER
B.J.	BELOW JOISTS
BSI	BEVERAGE SYSTEM INSTALLER
DCV	DEMAND CONTROL VENTILATION
E.A.	EXHAUST AIR
EC	ELECTRICAL CONTRACTOR
FAC	FIRE ALARM CONTRACTOR
FOB	FLAT ON BOTTOM
FOT	FLAT ON TOP
FPC	FIRE PROTECTION CONTRACTOR
GC	GENERAL CONTRACTOR
I.D.	INSIDE DIMENSION
KEI	KITCHEN EQUIPMENT INSTALLER
KES	KITCHEN EQUIPMENT SUPPLIER
M.A. (S)	MIXED AIR - SUMMER
M.A. (W)	MIXED AIR - WINTER
MC	MECHANICAL CONTRACTOR
O.A.	OUTDOOR AIR
O.D.	OUTSIDE DIMENSION
O/O	OWNER/OPERATOR
PC	PLUMBING CONTRACTOR
R.A.	RETURN AIR
RC	REFRIGERATION CONTRACTOR
S.A.	SUPPLY AIR
S.P.	STATIC PRESSURE
MC	TEST AND BALANCE CONTRACTOR

LINGLE DESIGN GROUP INC
158 WEST MAIN STREET
LENA, IL 61048
815.369.9155
1764 BLAKE ST
DENVER, CO 8020
303.974.5873
WWW.LINGLEDESIGN.COM

WCW Engineers, Inc.
760 Creel Drive
Wood Dale, Illinois 60191
Tel. 630/595-8900
Fax 630/595-8818
www.WCWengineers.com

© ALL DRAWINGS AND WRITTEN MATERIAL CONTAINED HEREIN ARE THE PROPERTY OF THE LINGLE DESIGN GROUP, INC. THEY MAY NOT BE REVISED, COPIED, REUSED, OR DISCLOSED IN ANY MANNER WITHOUT WRITTEN AUTHORIZATION FROM THE ARCHITECT.

LICENSE EXPIRATION: APR 30, 2027

JOSEPH G. THOMAS LICENSED 16129 KANSAS PROFESSIONAL ENGINEER

DATE ISSUED: JUN 22, 2026

STATE ID: 150404
PROJECT #: 26-028
NATIONAL #: 44655
DRAWN BY: SC
CHECKED BY: JT

DATE:
04/08/26 - PERMIT / BID SET

REVISIONS
1 05/07/26 - QC COMMENTS/ADA UPDATE
2 06/22/26 - CITY COMMENTS / DECOR

CLIENT
McDonald's USA, LLC

PROTOTYPE
BB20 4584 WW-HB
ISSUE DATE 02/25

ADDRESS
707 1/2 METROPOLITAN AVE
LEAVENWORTH, KS 66048

SHEET TITLE
GENERAL NOTES

SHEET NUMBER:
M4.0

H:\26113\Dwg\MECH.dwg, M4-0, 6/19/2026 10:42:52 AM, 1:1

COORDINATION SCHEDULE

GENERAL REQUIREMENTS	FURNISH	INSTALL	FINAL CONNECTION	NOTES
MECHANICAL PERMIT	MC			1–3
HOT WORK (WELDING) PERMIT (IF APPLICABLE)	MC			1–3
REFRIGERATION PERMIT (IF APPLICABLE)	KES			1–3
PLUMBING PERMIT	PC			1–3
ELECTRICAL PERMIT	EC			1–3
FIRE SPRINKLER PERMIT (IF APPLICABLE)	FPC			1–3
FIRE ALARM PERMIT (IF APPLICABLE)	FAC			1–3
CONTRACTOR COORDINATION REQUIREMENTS				
HEATING & AIR–CONDITIONING				
ROOFTOP UNITS, INTAKE AND RELIEF	MCD CP	MC		1–5, 17, 22
ROOF CURBS	MCD CP	MC		1–3, 20, 22
GAS PIPING AND GAS PIPE KIT	PC	PC	PC	1–3, 14, 22–23
CONTROLS WIRING	MC	EC	EC	1–3, 19, 22, 24
POWER WIRING	EC	EC	EC	1–3, 19, 22, 24
CONDENSATE TRAP	MC	PC		1–3, 22–23
CONDENSATE PIPING (IF APPLICABLE)	PC	PC		1–3, 22–23
DUCT–MOUNTED SMOKE DETECTOR	MC	MC	EC	1–3, 22, 24
GENERAL EXHAUST SYSTEMS				
EXHAUST FANS	MCD CP	MC		1–3, 17, 22
ROOF CURBS	MCD CP	MC		1–3, 22
CONTROLS (WHERE APPLICABLE)	MC	EC	EC	1–3, 22, 24
POWER WIRING	EC	EC	EC	1–3, 22, 24
TEMPERATURE CONTROLS				
BUILDING AUTOMATION SYSTEM	MCD CP	MC	EC	1–3, 22, 24
REMOTE SENSORS (RH AND/OR TEMPERATURE)	MC	MC	EC	1–3, 22, 24
CONTROLS WIRING (WHERE APPLICABLE)	MC	EC	EC	1–3, 22, 24
POWER WIRING	EC	EC	EC	1–3, 22, 24
DUCTWORK AND ACCESSORIES				
GALVANIZED SHEET METAL DUCTWORK	MC	MC		1–3, 22
EXTERNAL INSULATION	MC	MC		1–3, 22
INTERNAL INSULATION (IF APPLICABLE)	MC	MC		1–3, 22
WEATHERPROOFING (IF APPLICABLE)	MC	MC		1–3, 22
SPIN–IN COLLARS	MC	MC		1–3, 22
FLEXIBLE DUCTWORK	MC	MC		1–3, 22
VOLUME/BALANCING DAMPERS	MC	MC		1–3, 22
FIRE DAMPERS (IF APPLICABLE)	MC	MC		1–3, 22
FIRESTOPPING (IF APPLICABLE)	MC	MC		1–3, 22
AIR DEVICES AND ACCESSORIES	MC	MC	MC	1–3, 7, 22, 28
PLUMBING SYSTEMS				
WATER HEATERS	MCD CP	PC	PC	1–3, 11–12, 23
HOT AND COLD WATER PIPE	PC	PC	PC	1–3, 23
VENTS AND INTAKES	PC	PC	PC	1–3, 23
THERMOSTATIC MIXING VALVE	PC	PC	PC	1–3, 23
POWER AND CONTROL WIRING	EC	EC	EC	1–3, 23–24
KITCHEN EXHAUST SYSTEMS				
McDONALD'S BACKSHELF EXHAUST HOODS	KES	KEI		1–3, 6, 22, 27
CANOPY EXHAUST HOODS (IF APPLICABLE)	KES	KEI		1–3, 6, 22, 27
BLACK IRON DUCTWORK	KES	KEI		1–3, 6, 22
STAINLESS STEEL DUCTWORK (IF APPLICABLE)	KES	KEI		1–3, 6, 22
ALUMINUM DUCTWORK (IF APPLICABLE)	KES	KEI		1–3, 6, 22
UL LISTED DUCT WRAP	MC	MC		1–3, 6, 22
FIRE–RATED DUCT ENCLOSURE (IF APPLICABLE)	GC	GC		1–3, 6, 20, 22
EXHAUST FANS	MCD CP	MC		1–3, 6, 17, 22
ROOF CURBS	MCD CP	MC		1–3, 6, 20, 22
CURB EXTENSIONS	MC	MC		1–3, 6, 22
CONTROLS (WHERE APPLICABLE)	EC	EC	EC	1–3, 6, 22, 24
POWER WIRING	EC	EC	EC	1–3, 6, 22, 24
FIRE SUPPRESSION SYSTEM	KES	KES	KES	1–3, 16, 22, 27
KITCHEN EQUIPMENT				
COOLER/FREEZER	KES	GC		1–3, 27
EVAPORATOR COILS	KES	MC		1–3, 27
CONDENSATE PIPING	PC	PC	PC	1–3, 23, 27
REMOTE CONDENSING UNIT (MAC)	KES	MC		1–3, 22, 27
ROOF CURBS	MC	MC		1–3, 22
REFRIGERANT PIPING	KES	MC	MC	1–3, 22, 27
POWER WIRING	EC	EC	EC	1–3, 22, 24, 27
CONTROL WIRING	EC	EC	EC	1–3, 24, 27
PIPE PORTALS	MC	MC		1–3, 22
ICE MACHINES	KES	KEI		1–3, 27
WATER SUPPLY PIPING	KES	KEI	BSI	1–3, 27
REMOTE CONDENSING UNITS	KES	MC		1–3, 22, 27
ROOF CURBS	MC	MC		1–3, 22, 27
REFRIGERANT PIPING	KES	MC	MC	1–3, 22, 27
POWER WIRING	EC	EC	EC	1–3, 22, 24, 27
CONTROL WIRING	KES	EC	EC	1–3, 24, 27
PIPE PORTALS	MC	MC		1–3, 22
GRILLS	KES	KES		1–3, 27
GAS PIPING (IF APPLICABLE)	PC	PC	PC	1–3, 23, 27
POWER WIRING	EC	EC	EC	1–3, 24, 27
CONTROL CABLE (6' CLAMSHELL ONLY)	MC	EC	EC	1–3, 23, 24, 27
FRYERS	KES	KES		1–3, 27
GAS PIPING (IF APPLICABLE)	PC	PC	PC	1–3, 23, 27
POWER WIRING	EC	EC	EC	1–3, 24, 27
3–COMPARTMENT SINK	KES	KES		1–3, 12, 27
FAUCETS AND PRE–RINSE SPRAYER	KES	KES		1–3, 27
WATER SUPPLY PIPING	PC	PC	PC	1–3, 23, 27
SANITARY DRAIN PIPING	PC	PC	PC	1–3, 23, 27
HAND SINKS	MCD CP	PC		1–3, 23, 27
FAUCET	MCD CP	PC		1–3, 23, 27
WATER SUPPLY PIPING	PC	PC	PC	1–3, 23, 27
SANITARY DRAIN PIPING	PC	PC	PC	1–3, 23, 27
VEGETABLE SINK	KES	KES		1–3, 23, 27
FAUCET	KES	KES		1–3, 23, 27
WATER SUPPLY PIPING	PC	PC	PC	1–3, 23, 27
SANITARY DRAIN PIPING	PC	PC	PC	1–3, 23, 27
WASHING MACHINE	KES	KES		1–3, 23, 27
WATER SUPPLY PIPING	PC	PC	PC	1–3, 23, 27
SANITARY DRAIN PIPING	PC	PC	PC	1–3, 23, 27
WARE WASHER	KES	KES		1–3, 23, 27
WATER SUPPLY PIPING	PC	PC	PC	1–3, 23, 27
SANITARY DRAIN PIPING	PC	PC	PC	1–3, 23, 27
MISCELLANEOUS ITEMS				
FIRE SPINKLER SYSTEMS	FPC	FPC	FPC	1–3, 15, 25
HVAC EQUIPMENT START–UP	MC			1–3, 22
TEST, ADJUST AND BALANCE HVAC SYSTEMS	TAB			1–3, 22
DOOR GRILLES (IF APPLICABLE)	MC	GC		1–3, 20, 22
ROOF/WALL OPENINGS	GC			1–3, 20–24
APPLIANCE BACKFLOW PREVENTION	KES/BSI	PC	PC	1–3, 23, 27
CO2 DETECTION SYSTEM	KES/BSI	EC/BSI	EC/BSI	1–3, 22, 27

NOTES:

1. THIS SCHEDULE IS INTENDED AS A GUIDE FOR THE WORK TO BE PERFORMED. ALL WORK SHALL BE COORDINATED BETWEEN THE McDONALD'S AREA CONSTRUCTION MANAGER AND ALL GC AND O/O SUBCONTRACTORS.
2. ONE (1) COPY OF THE DECOR PACKAGE DRAWINGS SHALL BE SUPPLIED TO THE GENERAL CONTRACTOR AND EACH OF THE SUBCONTRACTORS. IT SHALL BE THE RESPONSIBILITY OF THE GENERAL CONTRACTOR AND THE SUBCONTRACTORS TO INSURE THAT THEY HAVE RECEIVED THE DECOR PACKAGE DRAWINGS.
3. FOR ANY WORK NOT CLARIFIED IN THIS SCHEDULE OR IN THE NOTES AND SPECIFICATIONS, PLEASE CONSULT THE McDONALD'S CONSTRUCTION MANAGER FOR SCOPE OF WORK.
4. ALL ROOFTOP UNIT EQUIPMENT SUPPLIED BY THE MECHANICAL CONTRACTOR AND THE KITCHEN EQUIPMENT SUPPLIER SHALL BE ON SITE AT THE SAME TIME FOR A SINGLE CRANE LIFT. EQUIPMENT SITE ARRIVAL DATE SHALL BE COORDINATED BETWEEN THE CONSTRUCTION MANAGER, MECHANICAL CONTRACTOR AND KITCHEN EQUIPMENT SUPPLIER.
5. ALL ROOFTOP UNITS INSTALLED IN McDONALD'S RESTAURANTS SHALL BE HIGH EFFICIENCY EQUIPMENT. THE INSTALLATION OF STANDARD EFFICIENCY ROOFTOP UNITS IS PROHIBITED. PLEASE REFER TO THE LATEST EDITION OF IECC FOR HVAC EQUIPMENT PERFORMANCE REQUIREMENTS.
6. ALL KITCHEN EQUIPMENT REQUIRING EXHAUST SHALL BE INSTALLED IN ACCORDANCE WITH THESE PLANS. ANY VARIATION FROM THESE PLANS SHALL BE REPORTED TO THE CONSTRUCTION MANAGER AND THE ENGINEER–OF–RECORD.
7. WHERE GYPSUM BOARD CEILINGS ARE INSTALLED, THE MECHANICAL CONTRACTOR SHALL SUPPLY DRYWALL MOUNTING FRAMES FOR LAY–IN TYPE DIFFUSERS.
8. ALL WORK SHOWN ON P1.6 DRAWING(S) SHALL BE COMPLETED BY THE BEVERAGE SYSTEM INSTALLER (OR K.E.S.) UNLESS OTHERWISE NOTED IN THE PLUMBING DRAWINGS.
9. ALL WORK ON P1.0 & P1.2 DRAWING(S) SHALL BE BY THE PLUMBING CONTRACTOR.
10. THE BEVERAGE SYSTEM INSTALLER FURNISHES, RUNS AND CONNECTS ALL FLEXIBLE WATER AND SYRUP LINES FOR ALL AFFECTED EQUIPMENT INCLUDING THE FOLLOWING:
    A. HOT CHOCOLATE
    B. COFFEE BREWER
    C. ICE MACHINE
    D. O.J.
    E. SODA TOWERS
11. ALL WATER HEATERS INSTALLED IN McDONALD'S RESTAURANTS SHALL BE HIGH EFFICIENCY SEALED–COMBUSTION WATER HEATERS. THE INSTALLATION OF STANDARD EFFICIENCY GRAVITY–VENTED WATER HEATERS IS PROHIBITED. PLEASE REFER TO THE LATEST EDITION OF IECC FOR SERVICE WATER–HEATING EQUIPMENT PERFORMANCE EFFICIENCY REQUIREMENTS.
12. THE CONSTRUCTION MANAGER, PLUMBING CONTRACTOR AND KITCHEN EQUIPMENT SUPPLIER SHALL COORDINATE WHICH SOILED DISHWASHER (3–COMPARTMENT SINK) IS BEING INSTALLED IN THE RESTAURANT.
13. ALL GAS PIPING FOR COOKING EQUIPMENT SHALL TERMINATE IN THE CEILING PRIOR TO THE INSTALLATION OF THE PIPING CHASE. UPON INSTALLATION OF THE CHASE, THE GAS PIPING SHALL THEN BE CONTINUED IN THE CHASE FOR FINAL CONNECTION TO THE APPLIANCE.
14. ALL GAS PIPING FOR ROOFTOP EQUIPMENT SHALL BE BROUGHT UP THROUGH THE BASE OF THE UNIT TO MINIMIZE ROOF PENETRATIONS. WHERE THIS IS NOT POSSIBLE, THE PLUMBING CONTRACTOR SHALL PROVIDE THE NECESSARY PIPE PORTALS ON ROOF.
15. ALL FIRE PROTECTION DRAWINGS CONTAINED WITHIN THIS SET ARE STRICTLY FOR REFERENCE ONLY. FIRE SPRINKLER DRAWINGS SHALL BE DESIGNED AND PERMITTED BY A FIRE PROTECTION CONTRACTOR.
16. ALL R–102 WET CHEMICAL FIRE SUPPRESSION SYSTEMS FOR TYPE I HOODS SHALL BE DESIGNED AND INSTALLED BY A LOCAL ANSUL AGENT. THE USE OF DRY CHEMICAL SYSTEMS IS PROHIBITED. THE LOCAL ANSUL AGENT CONTRACT IS HANDLED THROUGH THE KITCHEN EQUIPMENT SUPPLIER.
17. ALL ROOFTOP UNITS AND EXHAUST FANS ARE SUPPLIED WITH A FACTORY–INSTALLED DISCONNECT SWITCH.
18. ELECTRICAL CONTRACTOR SHALL PROVIDE DISCONNECT SWITCHES FOR REMOTE CONDENSING UNITS.
19. ALL ELECTRICAL CONDUITS FOR ROOFTOP EQUIPMENT SHALL BE BROUGHT UP THROUGH THE BASE OF THE UNIT TO MINIMIZE ROOF PENETRATIONS. WHERE THIS IS NOT POSSIBLE, THE ELECTRICAL CONTRACTOR SHALL PROVIDE THE NECESSARY PIPE PORTALS ON ROOF.
20. WALK–IN COOLER AND WALK–IN FREEZER REFRIGERATION SYSTEMS SHALL MEET THE PERFORMANCE REQUIREMENTS OUTLINED IN THE LATEST EDITION OF IECC. MINIMUM ANNUAL WALK–IN ENERGY FACTOR (AWEF) PROVIDED BY EQUIPMENT MANUFACTURER IS DETERMINED IN ACCORDANCE WITH AHRI 1250.
21. SEE ARCHITECTURAL DRAWINGS FOR ADDITIONAL INFORMATION.
22. SEE STRUCTURAL DRAWINGS FOR ADDITIONAL INFORMATION.
23. SEE MECHANICAL DRAWINGS FOR ADDITIONAL INFORMATION.
24. SEE PLUMBING DRAWINGS FOR ADDITIONAL INFORMATION.
25. SEE ELECTRICAL DRAWINGS FOR ADDITIONAL INFORMATION.
26. SEE FIRE PROTECTION DRAWINGS FOR ADDITIONAL INFORMATION.
27. SEE FIRE ALARM DRAWINGS FOR ADDITIONAL INFORMATION.
28. SEE KITCHEN DRAWINGS FOR ADDITIONAL INFORMATION.
29. SEE DECOR DRAWINGS FOR ADDITIONAL INFORMATION.

AIR DEVICE SCHEDULE

TAG	MANUFACTURER	MODEL	BORDER	SIZE	COLOR	ACCESSORIES	NOTES
S–1	TITUS	PDR	LAY–IN	48x24	WHITE	7	1,2,8
	PRICE	PDDRE					
S–2	TITUS	OMNI	LAY–IN	24x24	VARIES	4,6,7	1,6,7,8
	PRICE	SPD					
S–3	TITUS	OMNI	LAY–IN	12x12	VARIES	1,2,7	1,3,6,8
	PRICE	SPD					
S–4	TITUS	TBDI–80	LAY–IN	48" (2) ¾" SLOTS	VARIES	7	1,5,6,8
	PRICE	TBDI4					
R–1	TITUS	PAR	LAY–IN	24x24	VARIES	7	1,6,8
	PRICE	10					
R–2	TITUS	355RL	SURFACE MOUNT	4x12	WHITE	–	8
	PRICE	530					
E–1	TITUS	355RL	LAY–IN	12x12	WHITE	1,7	1,8
	PRICE	530					

ACCESSORIES:
1. COMBINATION DAMPER AND EQUALIZING GRID
2. PLASTER FRAME FOR DRYWALL CEILING INSTALLATION
3. (NOT USED)
4. BACKPAN INSULATION
5. (NOT USED)
6. BLANK–OFF PANEL AS SHOWN ON DUCTWORK PLAN
7. PLASTER FRAME MAY BE NECESSARY – COORDINATE WITH DECOR DRAWINGS

NOTES:
1. SEE PLAN FOR NECK SIZES
2. FABRICATE 46"x22"x27"H PLENUM WITH 14"ø SIDE INLET (SEE DETAIL 10 ON DRAWING M3.0)
3. PROVIDE 1" FIBERGLASS INSULATION FOR DIFFUSER BACKPAN
4. NOT USED
5. GENERAL CONTRACTOR SHALL PROVIDE ADDITIONAL 4 FT. T–BAR FOR DIFFUSER FRAMING
6. AIR DEVICE FINISH WILL VARY:
   * KITCHEN, STORAGE, RESTROOMS – WHITE
   * DINING ROOM, VESTIBULES – WHITE, BLACK OR PAINTABLE/PRIME COAT (COORDINATE FINAL COLOR WITH DECOR PLANS).
7. ADDITIONAL ACCESSORIES AND/OR ALTERNATE DIFFUSERS MAY BE REQUIRED. REFER TO DECOR DRAWINGS TO VERIFY.
8. ACCEPTABLE ALTERNATIVE MANUFACTURERS: NAILOR & METALAIRE.

CONTROLS

SYMBOL	DESCRIPTION	MANUFACTURER	MODEL
T	24V THERMOSTAT (ROOFTOP UNITS)	–	–
	120V THERMOSTAT (COMPUTER CLOSET)	HONEYWELL	T651A3018
TS	REMOTE TEMPERATURE SENSOR	–	–
ATS	REMOTE AVERAGING TEMPERATURE SENSOR	–	–
HS	REMOTE HUMIDITY SENSOR	–	–
	BULK CO2 DETECTION SYSTEM	LOGIC02	–

NOTES:
1. FOR TSTAT, TS, HS AND ATS INFORMATION, REFER TO E4.1
2. TO ORDER HONEYWELL EQUIPMENT CALL (800)575–4841
3. SEE KITCHEN DRAWINGS FOR BULK CO2 DETECTION LOCATIONS

AIR CURTAIN SCHEDULE

TAG	MANUFACTURER	MODEL	SERVES	AIRFLOW	ELEC	ACCESS.	NOTES
AC 1	POWERED AIRE	MP–1–30E	CASH BOOTH	VARIABLE	8.0 KW HEATER; ⅓ HP FAN	2,3,5	1,2
AC 2	POWERED AIRE	MP–1–30E	PRESENTER'S BOOTH	VARIABLE	8.0 KW HEATER; ⅓ HP FAN	2,3,5	1,2
AC 3	POWERED AIRE	RBT 1–48	STORAGE ENTRANCE	2,559 CFM	MCA: 10 MOCP: 20 ¾ HP	1–4	1,2
AC 4	POWERED AIRE	RBT 1–36	REAR ENTRANCE	2,541 CFM	MCA: 10 MOCP: 20 ¾ HP	1–4	1,2
AC 5	POWERED AIRE	MP 1–30	FORWARD PRESENTER'S BOOTH	VARIABLE	MCA: 5.5 MOCP: 10 ⅓ HP	2–4	1,2

ACCESSORIES:
1. NSF LISTING
2. DOOR SWITCH
3. DELAY TIMER
4. 120V/1ø/60Hz
5. 208V/1ø/60Hz

NOTES:
1. SET DELAY TIMER TO 30 SECONDS
2. MAINTAIN 7" CLEARANCE FOR MOTOR ACCESS ON SIDE OF AIR CURTAIN.

KITCHEN HOOD SCHEDULE

GENERAL					AIRFLOW		FILTERS	
TAG	SERVED BY	MANUFACTURER	MODEL	NOTES	CFM	CFM/LF	QTY/SIZE	FPM
KH 1	EXHAUST FAN (EF–1)	FRANKE	UH–122	1–4	1350	166	(5)10x20	263
		H&K						
KH 2	EXHAUST FAN (EF–2)	FRANKE	UH–50	1–4	575	173	(3)10x16	255
		H&K						
KH 3	EXHAUST FAN (EF–3)	FRANKE	UH–43	1–4	480	166	(2)10x20	255
		H&K						
KH 4	EXHAUST FAN (EF–6)	FRANKE	TYPE II	1–2, 5	600	150	–	–
		H&K						

NOTES:
1. HOODS SHALL BE PROVIDED BY THE KES (SEE COORDINATION SCHEDULE)
2. SEE HOOD DRAWINGS FOR CONSTRUCTION DETAILS AND UL INFORMATION
3. REFER TO E3.2 FOR HOOD/FAN INTERLOCK DETAILS
4. CAPTURE JET PLENUMS TO BE INSTALLED ON HOOD, REFER TO K2.1 KITCHEN SCHEDULE.
5. PROVIDE WITH FASCIA KIT. COORDINATE CONDENSATE DRAINAGE WITH P.C.

FAN SCHEDULE

GENERAL						DESIGN				ELECTRICAL				
TAG	MANUFACTURER	MODEL	SERVES	ACCESSORIES	NOTES	CFM	S.P.	BHP	FRPM	VOLTS	Ø	Hz	HP	FLA AMPS
EF 1	ACCUREX	XCUE–14010VG124MCD	KITCHEN HOOD (KH–1)	1–5,13,14	1,2,6	1350	1.75	0.61	1725	115 TO 10VDC ECM	1	60	1	11.5
EF 2	ACCUREX	XCUE–14010VG124MCD	KITCHEN HOOD (KH–2)	1–5,14	1,2,6	575	1.75	0.19	1725	115 TO 10VDC ECM	1	60	1	11.5
EF 3	ACCUREX	XCUE–14010VG124MCD	KITCHEN HOOD (KH–3)	1–5,13,14	1,2,6	480	1.75	0.19	1725	115 TO 10VDC ECM	1	60	1	11.5
EF 4	ACCUREX	XRED–099–VG4X–QD	DINING RESTROOMS	6–9,14	1,2,5	400	0.50	0.07	1126	115 TO 10VDC ECM	1	60	¼	2.5
EF 5	GREENHECK	SP–AP0511WL	DINING ROOM JANITOR'S CLOSET	10–12	1–3,5	80	0.20	–	900	115	1	60	–	0.29
EF 6	ACCUREX	XCUE–099–VG	KITCHEN HOOD (KH–4)	6–9,14	1,2,7	600	0.75	0.19	1725	115	1	60	¼	2.9
TF 1	GREENHECK	SP–A510	COMPUTER CLOSET	9–12	1–4	375	0.25	0.11	1100	115	1	60	–	3.3

ACCESSORIES:
1. 2–POLE NEMA 3R DISCONNECT SWITCH FACTORY–WIRED AND MOUNTED TO FAN
2. UL 762 LISTED AND LABELED
3. ROOF CURB MODEL GPF–24–G30 WITH 1" INSULATION
4. CURB EXTENSION INTEGRAL TO MCD FAN PACKAGE
5. HINGED CURB CAP KIT WITH CABLES
6. 120VAC BACKDRAFT DAMPER
7. ROOF CURB MODEL GPI–19–G14 WITH 1" INSULATION AND DAMPER TRAY
8. NEMA 3R DISCONNECT SWITCH
9. EXTERNAL STEADY–STATE SPEED CONTROLLER
10. ROUND DUCT CONNECTOR
11. TWO (2) 10W COMPACT LED LAMPS
12. PRISMATIC LENS
13. WINDBAND EXTENSION ON FAN OUTLET
14. VARIGREEN 10VDC ELECTRONICALLY COMMUTATED MOTOR

NOTES:
1. NO SUBSTITUTIONS PERMITTED
2. TO ORDER ACCUREX EQUIPMENT CALL (888)325–6629 OR E–MAIL: MCD@ACCUREX.COM
3. ELECTRICAL CONTRACTOR SHALL PROVIDE DOOR SWITCH FOR LIGHT CONTROL
4. MECHANICAL CONTRACTOR SHALL FURNISH LINE VOLTAGE THERMOSTAT FOR FAN CONTROL. ELECTRICAL CONTRACTOR SHALL INSTALL THERMOSTAT.
5. CONNECT TO TIMECLOCK FOR FAN SHUT–OFF DURING UNOCCUPIED HOURS
6. REFER TO E3.2 FOR HOOD/FAN INTERLOCK DETAILS
7. UNIT SHALL BE INTERLOCKED WITH WAREWASHER SWITCHING CONTACT.

PACKAGED ROOFTOP UNIT SCHEDULE -DX/GAS

TAG	AREA SERVED	NOMINAL TONNAGE	MINIMUM OA (CFM)	SUPPLY FAN					COOLING COIL (DX)						HEAT EXCHANGER (GAS)					WEIGHT (LBS.)*	UNIT POWER CONNECTION				MANUFACTURER	MODEL NO.	ACCESSORIES
				SUPPLY AIRFLOW	EXT. S.P. (IN	MHP	BHP	RPM	ENTERING AIR DB °F	ENTERING AIR WB °F	LEAVING AIR DB °F	LEAVING AIR WB °F	COOLING CAPACITY (MBH) SENSIBLE	COOLING CAPACITY (MBH) TOTAL	ENTERING AIR (DB °F)	LEAVING AIR (DB °F)	TOTAL CAPACITY INPUT	TOTAL CAPACITY OUTPUT	# OF STAGES		VOLT.	PHASE	MCA	MOCP			
RTU-1	KITCHEN	20	1,700	7,200	1.4	3.0	3.38	1,370	80.7	70.4	55.3	46.4	196.9	253.7	57.8	83.8	250,000	202,500	2	2,983	208	3	108	150	TRANE	YSK240	1,3,4,7,9,10,11,12,16,17,19,20,21
RTU-2	SUPPORT	6	800	2,400	0.8	3.1	0.69	1,002	83.0	71.4	56.3	47.2	69.3	85.1	50.7	97.5	150,000	121,500	2	1,471	208	3	38	50	TRANE	YSK072	1,3,4,7,8,9,10,11,12,16,19,20,21
RTU-3	DINING ROOM	12.5	1,330	5,000	1.0	4.6	2.30	1,531	80.4	71.2	57.0	48.0	126.3	153.5	58.5	96.0	250,000	202,500	2	1,770	208	3	67	90	TRANE	YSK150	1,3,4,7,8,9,10,11,12,16,17,19,20,21

ACCESSORIES:
1. DIFF. ENTHALPY ECONOMIZER
2. MOTORIZED O.A. DAMPER
3. BAROMETRIC RELIEF
4. MERV 13 FILTER
5. POWER EXHAUST
6. CO2 SENSOR FOR DCV
7. HUMIDITY CONTROL
8. SUPPLY AIR TEMPERING
9. TEMPERATURE SENSOR
10. COMBINED TEMP/HUMIDITY SENSOR
11. DISCONNECT SWITCH
12. FIELD WIRED 120V CONVENIENCE OUTLET
13. STAINLESS STEEL HEAT EXCHANGER
14. CONDENSER COIL PROTECTIVE COATING
15. EVAPORATOR COIL PROTECTIVE COATING
16. HAIL GUARD
17. RETURN AIR SMOKE DETECTOR
18. SUPPLY AIR SMOKE DETECTOR
19. 14" ROOF CURB
20. CONDENSATE DRAIN W/ P-TRAP
21. FLOAT SWITCH KIT

* NET WEIGHT ONLY - DOES NOT INCLUDE ADDITIONAL FACTORY OR FIELD INSTALLED OPTIONS / ACCESSORIES.

NOTES:
1. NO SUBSTITUTIONS PERMITTED.
2. TO ORDER TRANE EQUIPMENT, CALL (630) 400-4285 OR EMAIL: MCDONALDS@TRANE.COM
3. FACTORY INSTALLED DISCONNECT SWITCH IS NOT AVAILABLE WHEN MOCP IS 200 AMPS OR HIGHER. VERIFY WITH MANUFACTURER'S DOCUMENTATION PRIOR TO ORDERING.
4. MECHANICAL CONTRACTOR SHALL INSTALL SECONDARY ENTHALPY SENSOR IN RETURN AIR DUCT DROP &

LINGLE DESIGN GROUP INC
158 WEST MAIN STREET
LENA, IL 61048
815.369.9155
1764 BLAKE ST
DENVER, CO 8020
303.974.5873
WWW.LINGLEDESIGN.COM

WCW Engineers, Inc.
760 Creel Drive
Wood Dale, Illinois 60191
Tel. 630/595-8900
Fax 630/595-8818
www.WCWengineers.com

© ALL DRAWINGS AND WRITTEN MATERIAL CONTAINED HEREIN ARE THE PROPERTY OF THE LINGLE DESIGN GROUP, INC. THEY MAY NOT BE REVISED, COPIED, REUSED, OR DISCLOSED IN ANY MANNER WITHOUT WRITTEN AUTHORIZATION FROM THE ARCHITECT.

LICENSE EXPIRATION: APR 30, 2027

JOSEPH G. THOMAS LICENSED 16129 KANSAS PROFESSIONAL ENGINEER

DATE ISSUED: JUN 22, 2026

STATE ID: 150404
PROJECT #: 26-028
NATIONAL #: 446655
DRAWN BY: SC
CHECKED BY: JT

DATE: 04/08/26 - PERMIT / BID SET

REVISIONS
1. 05/07/26 - QC COMMENTS/ADA UPDATE
2. 06/22/26 - CITY COMMENTS / DECOR

CLIENT
McDonald's USA, LLC

PROTOTYPE
BB20 4584 WW-HB
ISSUE DATE 02/25

ADDRESS
707 1/2 METROPOLITAN AVE
LEAVENWORTH, KS 66048

SHEET TITLE
SCHEDULES

SHEET NUMBER:
M4.1

H:\26113\Dwg\MECH.dwg, M4-1, 6/19/2026 10:42:57 AM, 1:1