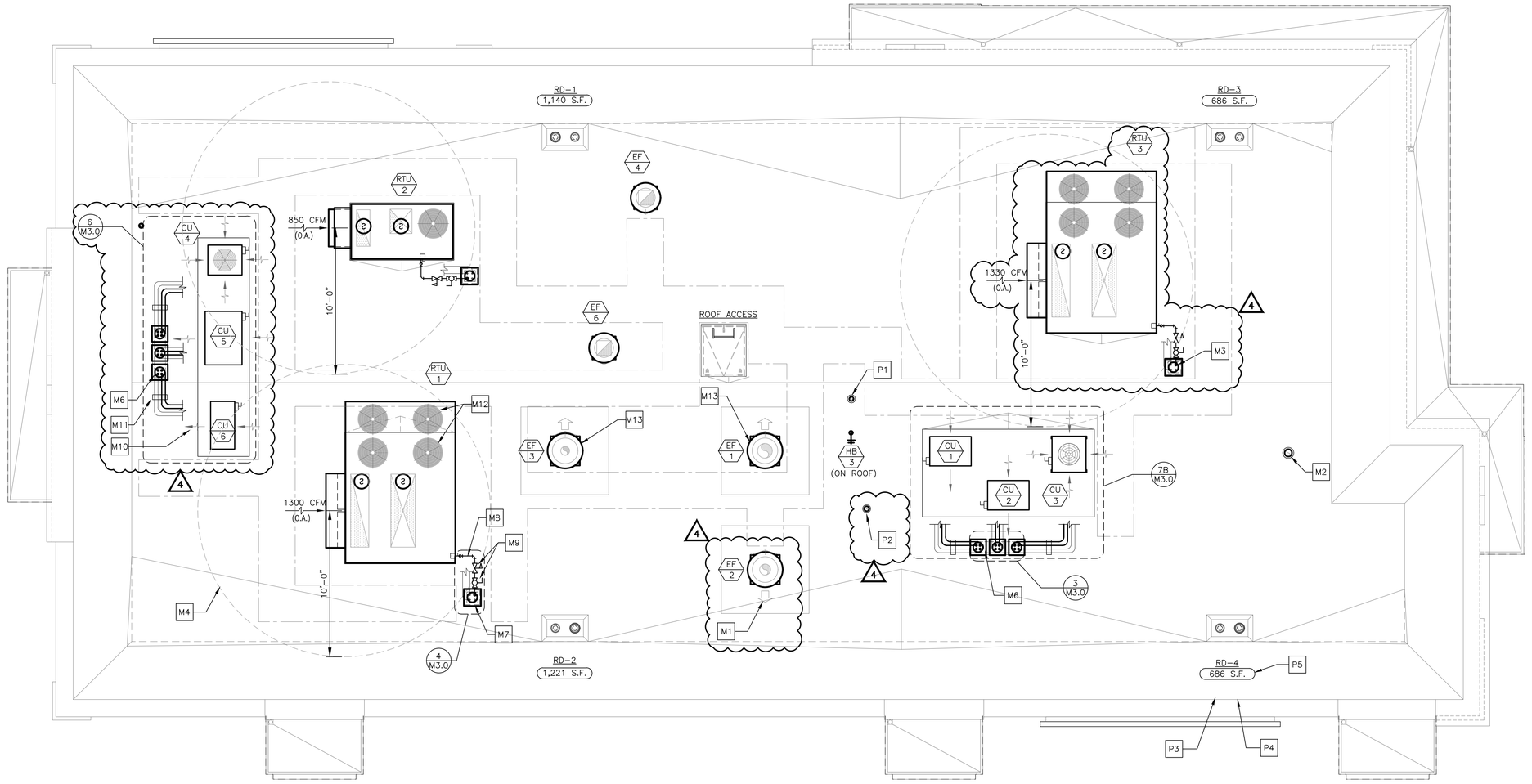

1 M1.0 ROOF PLAN
1/4"=1'-0"

CONDENSATE LINE FROM RTUs DOWN THROUGH THE ROOF ON UNITS BASE, TO BE FURNISHED AND INSTALLED BY PC. SEE PLUMBING SHEETS P1.2, P2.1 AND COORDINATION SCHEDULE ON M4.1.

DRAWING NOTES

1. ROOFTOP EQUIPMENT LOCATIONS SHOWN ARE GENERAL. ACTUAL LOCATIONS SHALL BE COORDINATED WITH THE STRUCTURAL DRAWINGS.
2. ROOF OPENINGS FOR ROOFTOP UNITS AND EXHAUST FANS SHALL BE COORDINATED WITH THE MANUFACTURER.
3. ROOF OPENINGS FOR PIPE PORTALS SHALL ONLY BE LARGE ENOUGH TO ALLOW PIPE AND CONDUIT PENETRATIONS. PIPE PORTAL CURB SHALL BE FILLED WITH AS MUCH BATT INSULATION AS POSSIBLE.
4. PRIOR TO INSTALLING THE TOP OF THE EQUIPMENT PLATFORM, INSIDE OF THE PLATFORM SHALL BE INSULATED WITH AS MUCH BATT INSULATION AS POSSIBLE.

KEYED NOTES

- M1 ARROW INDICATES DIRECTION OF EXHAUST FAN HINGE SWING (TYP.)
- M2 6"ø ALUMINUM EXHAUST DUCT FROM EXHAUST FAN (EF-5). PROVIDE PORTALS PLUS PLASTI-FLASH WITH C-126 CAP (OR EQUAL) FOR ROOF PENETRATION. TERMINATE DUCT A MIN. OF 24" ABOVE FINISHED ROOF WITH GOOSENECK.
- M3 GAS PIPING DOWN (TYP. 3 PLACES)
- M4 MAINTAIN A MINIMUM 10'-0" CLEARANCE FROM EDGE OF OUTLETS AND VENT TERMINALS TO FRESH AIR INTAKES (TYP.)
- M5 NOT USED
- M6 ROOF PIPE PORTAL FOR CONDENSING UNITS
- M7 ROOF PIPE PORTAL FOR ROOFTOP UNITS (TYP. 3 PLACES)
- M8 GAS PIPING FROM ROOF PORTAL TO ROOFTOP UNIT SHALL BE COATED WITH A CORROSION RESISTANT PAINT (SEE SHEET M4.0 "NATURAL GAS SYSTEMS", NOTE 8).
- M9 GAS PRESSURE REGULATOR AND SHUT-OFF VALVE, SET PRESSURE AT 7" W.C. - NATURAL GAS (TYP. OF 3)
- M10 ARROW INDICATES DIRECTION OF AIRFLOW FOR CONDENSING OR ROOFTOP UNIT AIR INTAKE (TYP.)
- M11 REFRIGERANT PIPING SUPPORT AS REQUIRED. PROVIDE ROOFTOP BLOX MODEL RTB-01 (OR EQUAL) AND ALL NECESSARY ACCESSORIES FOR PROPER PIPE AND CONDUIT SUPPORT. PROVIDE GALVANIZED PIPE SHIELD TO PROTECT INSULATION AT ALL SUPPORTS.
- M12 PROVIDE HAIL GUARD FOR RTU-1 PROTECTING CONDENSER COIL FROM GREASE.
- M13 EXHAUST FANS WITH WINDBAND EXTENSION AND/OR RAISED CURBS TO PREVENT DIRECT GREASE BLOW ONTO CONDENSER COIL OF UNIT RTU-1.
- P1 CONCENTRIC VENTING KIT FOR COMBUSTION AIR INTAKE AND FLUE EXHAUST FOR SEALED COMBUSTION WATER HEATER (SEE PLUMBING DRAWINGS). PROVIDE PORTALS PLUS PLASTIFLASH WITH C-126 CAP (OR EQUAL) FOR ROOF PENETRATION.
- P2 PLUMBING VENT THROUGH ROOF (SEE PLUMBING DRAWINGS). PROVIDE PORTALS PLUS PLASTI-FLASH WITH C-126 CAP (OR EQUAL) FOR ROOF PENETRATION.
- P3 PRIMARY ROOF DRAIN WITH DOME STRAINER (TYP). (SEE PLUMBING DRAWINGS)
- P4 OVERFLOW ROOF DRAIN WITH DOME STRAINER (TYP). (SEE PLUMBING DRAWINGS)
- P5 AREA OF ROOF SERVED BY ROOF DRAIN (TYP.)

PIPE PORTAL SCHEDULE

MANUFACTURER	CURB DIMENSIONS	CURB TYPE	CAP TYPE (QTY)	SERVES
RPS	12"x12"x11"H	RC-2A	N18 (1)	RTU-1 THROUGH RTU-3
RPS	43"x12"x13"H	RC-2A	N18 (3)	CU-1 THROUGH CU-6

SEQUENCE OF OPERATION

THERMOSTAT SETTINGS

MODE	FAN	SETPOINTS COOLING	SETPOINTS HEATING
OCCUPIED	ON	75°F	70°F
UNOCCUPIED	AUTO	90°F	55°F
HUMIDITY			
HUMIDITY SETPOINT (FOR DEHUMIDIFICATION UNITS ONLY)			60%

RTU-1, RTU-2 & RTU-3:

1. OCCUPIED MODE SHALL BEGIN AS FOLLOWS:
   - RTU-1: 1.5 HOURS BEFORE OPEN
   - RTU-2: 1 HOUR BEFORE OPEN
   - RTU-3: 30 MINUTES BEFORE OPEN
2. ROOFTOP UNIT FAN SHALL RUN CONTINUOUSLY DURING OCCUPIED MODE
3. ECONOMIZER SHALL BE OPEN DURING OCCUPIED MODE (OUTDOOR AIR THROUGH ROOFTOP UNITS SERVES AS MAKE-UP AIR FOR THE KITCHEN EXHAUST SYSTEM) - REFER TO E3.2 FOR HOOD/FAN INTERLOCK DETAILS.
4. UNOCCUPIED MODE SHALL BEGIN ONE (1) HOUR AFTER STORE CLOSES
5. DURING UNOCCUPIED MODE, ECONOMIZER IS CLOSED AND HEATING, COOLING AND FAN OPERATE IN AUTO MODE (ON DEMAND)
6. RTU-2 SHALL BE INTERLOCKED WITH EF-6. UPON ACTIVATION OF EF-6, RTU-2 SHALL INCREASE SUPPLY AND OUTSIDE AIR BY 600 CFM, WHILE MAINTAINING 1250 CFM RETURN AIR. COORDINATED WITH E.C. AND BAS SUPPLIER.

LINGLE DESIGN GROUP INC
158 WEST MAIN STREET
LENA, IL 61048
815.369.9155
1764 BLAKE ST
DENVER, CO 8020
303.974.5873
WWW.LINGLEDESIGN.COM

WCW Engineers, Inc.
760 Creel Drive
Wood Dale, Illinois 60191
Tel 630/595-8800
Fax 630/595-8818
www.WCWengineers.com

© ALL DRAWINGS AND WRITTEN MATERIAL CONTAINED HEREIN ARE THE PROPERTY OF THE LINGLE DESIGN GROUP, INC. THEY MAY NOT BE REVISED, COPIED, REUSED, OR DISCLOSED IN ANY MANNER WITHOUT WRITTEN AUTHORIZATION FROM THE ARCHITECT.

LICENSE EXPIRATION: APR 30, 2027
JEFF A. KLINKERT LICENSED PE31503 KANSAS PROFESSIONAL ENGINEER
DATE ISSUED: AUG 2, 2026

STATE #: 150405
PROJECT #: 25-079
NATIONAL #: 44936
DRAWN BY: SC
CHECKED BY: JK

DATE:
10/15/25 - PERMIT / BID SET

REVISIONS
1. 11/12/25 - QC COMMENTS/PROTO UPDATE
2. 02/12/26 - CITY COMMENTS
3. 03/10/26 - DECOR UPDATE
4. 08/02/26 - OWNER COMMENTS / PROTOTYPE UPDATES

CLIENT
McDonald's USA, LLC

PROTOTYPE
BB20 4590 MS-HB
ISSUE DATE 08/27/25

ADDRESS
2320 METROPOLITAN AVE
KANSAS CITY, KS 66106

SHEET TITLE
ROOF PLAN

SHEET NUMBER:
M1.0

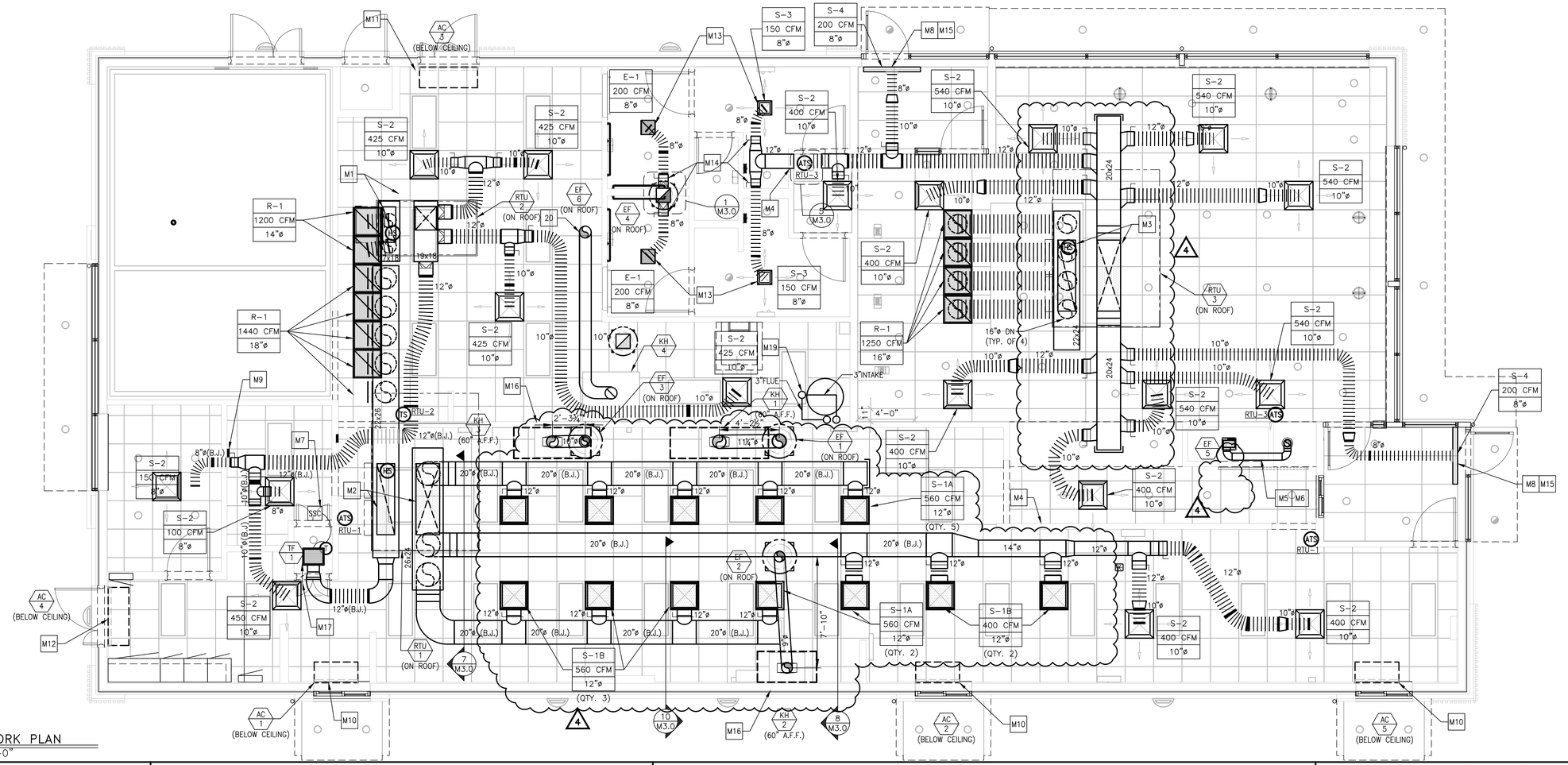

1 M1.2 DUCTWORK PLAN
1/4"=1'-0"

DRAWING NOTES

1. ALL DUCTWORK SHALL BE RUN BETWEEN OR THROUGH THE JOISTS UNLESS NOTED OTHERWISE. DUCTWORK DESIGNATED WITH (B.J.) SHALL BE RUN BELOW THE JOISTS.
2. DUCT SIZES SHOWN ARE INTERNAL FREE AREA DIMENSIONS UNLESS NOTED OTHERWISE.
3. ALL SHEET METAL DUCTWORK SHALL BE EXTERNALLY INSULATED. INSULATION IS NOT SHOWN FOR CLARITY. SEE MECHANICAL NOTES FOR INSULATION REQUIREMENTS.
4. CARBON STEEL KITCHEN EXHAUST DUCTWORK SHALL BE EXTERNALLY INSULATED. INSULATION NOT SHOWN FOR CLARITY. SEE MECHANICAL NOTES AND DETAILS FOR INSULATION REQUIREMENTS.
5. RETURN AIRFLOW VOLUME SHOWN ON PLAN IS FOR DUCTWORK SIZING PURPOSES WHEN THE UNIT IS IN RECIRCULATION (UNOCCUPIED) MODE.
6. DIFFUSERS IN DINING ROOM ARE SPECIFIC TO THE DECOR PLAN SHOWN. DIFFERENT CEILING LAYOUTS MAY REQUIRE A DIFFERENT DIFFUSER TYPES, QUANTITIES, LOCATIONS AND FINISHES/COLORS.
7. NO DIFFUSERS OR GRILLES TO BE INSTALLED ABOVE KIOSKS TO AVOID CONFLICTS WITH KIOSK'S CEILING PENETRATIONS FOR CONDUITS

KEYED NOTES

- M1 18x20 SUPPLY AND 11x30 RETURN DUCT DROPS FROM ROOFTOP UNIT (RTU-2)
- M2 20x60 SUPPLY AND 15x60 RETURN DUCT DROPS FROM ROOFTOP UNIT (RTU-1)
- M3 20x60 SUPPLY AND 15x60 RETURN DUCT DROPS FROM ROOFTOP UNIT (RTU-3)
- M4 PROVIDE SHEET METAL DUCT AT ALL DRAFTSTOP WALL PENETRATIONS (TYP.)
- M5 6"ø ALUMINUM DUCT FROM EXHAUST FAN UP THROUGH ROOF
- M6 EXTERNALLY INSULATE EXHAUST DUCT FROM FAN TO ROOF PENETRATION
- M7 STEADY STATE SPEED CONTROLLER FOR CEILING MOUNTED EXHAUST FAN. STEADY STATE SPEED CONTROLLER SHALL BE INSTALLED OVER SUSPENDED CEILING FOR ACCESS. DO NOT INSTALL OVER AREAS WITH DRYWALL CEILINGS.
- M8 SET DIFFUSER'S (S-5) OUTER SLOT FOR VERTICAL AIR THROW PATTERN AND INNER SLOT FOR HORIZONTAL THROW PATTERN (TYP.)
- M9 BUILDING AUTOMATION SYSTEM LOCATION. SEE LIGHTING CONTROL DETAILS ON SHEET E4.1.
- M10 MOUNT AIR CURTAIN TIGHT TO CEILING
- M11 MOUNT AIR CURTAIN WITH BOTTOM OF UNIT AT TOP OF DOOR FRAME
- M12 MOUNT AIR CURTAIN WITH BOTTOM OF UNIT ABOVE DOOR FRAME AND TOP OF SWITCHGEAR TO MEET 3'-0" MINIMUM SWITCHGEAR'S CLEARANCE REQUIREMENT
- M13 FOR DIFFUSERS INSTALLED IN DRYWALL CEILINGS, VOLUME DAMPER IS INTEGRAL TO DIFFUSER AND ADJUSTABLE AT FACE OF DIFFUSER (SEE NOTE 18 UNDER "VENTILATION SYSTEMS" ON DRAWING M4.0 AND AIR DEVICE SCHEDULE ON DRAWING M4.1)
- M14 FOR DIFFUSERS INSTALLED IN DRYWALL CEILINGS, INSTALL HIGH-EFFICIENCY TAKE-OFFS WITH VOLUME DAMPER IN FULL-OPEN POSITION TO FACILITATE BALANCING AT FACE OF DIFFUSER.
- M15 GENERAL CONTRACTOR SHALL PROVIDE ADDITIONAL T-BAR FRAME TO PROPERLY LOCATE DIFFUSER AS SHOWN. AIR STREAM FROM DIFFUSER SHALL COVER ENTIRE DOOR OPENING.
- M16 NONCOMBUSTIBLE WALL CONSTRUCTION BEHIND TYPE I KITCHEN HOODS. REFER TO SHEET A1.0 FOR MORE INFORMATION.
- M17 ONE INCH DOOR UNDERCUT TRANSFER AIR TO CLOSET (100 CFM.) SEE ARCH PLANS FOR LOUVERED DOOR SCHEDULE.
- M18 MECHANICAL CONTRACTOR TO PROVIDE 4x12 LOUVERED RETURN AIR BEHIND EACH RECESSED MENU BOARD. SEE ARCHITECTURAL PLANS, DETAIL 14/A3.1. AND AIR DEVICE SCHEDULE (R-2) ON SHEET M4.1.

2018 IMC SECTION 403.3 - VENTILATION SCHEDULE

UNIT	AREA SERVED	AREA FT² (Az)	CFM / PERSON (Rp)	CFM/FT² (Ra)	PEOPLE / 1000 FT² (Pz)	BREATHING ZONE REQUIRED O/A CFM (Vbz)	Ez*	Ev**	REQUIRED O/A CFM (Vot)***	ACTUAL O/A CFM	REQUIRED EXHAUST CFM	ACTUAL EXHAUST CFM
RTU-1	PRESENTER	335	7.5	0.12	20	90	0.8	1.00	-	-	-	-
	KITCHEN	820	7.5	0.12	20	221	0.8		-	-	-	-
						312			*248*	*1700*		
RTU-2	SUPPORT	565	5	0.06	2	40	0.8	1.00	-	-	-	-
	MANAGER'S OFFICE	65	5	0.06	5	6	0.8		-	-	-	-
	CREW ROOM	95	5	0.06	5	8	0.8		-	-	-	-
	ORDER	131	7.5	0.12	20	35	0.8		-	-	-	-
						89			*135*	*800*		
RTU-3	DINING	903	7.5	0.18	70	637	0.8	0.95	-	-	-	-
	CUSTOMER SERVICE	135	7.5	0.18	70	95	0.8		-	-	-	-
	VESTIBULE 1	55	-	0.06	-	3	0.8		-	-	-	-
	VESTIBULE 2	75	-	0.06	-	5	0.8		-	-	-	-
	WOMEN'S	137	-	-	-	-	-		-	-	-	-
	MEN'S	121	-	-	-	-	-		-	-	-	-
						740			*606*	*1130*		
EF-1, 2 & 3	KITCHEN	1155	-	0.7	-	-	-	-	-	-	809	2375
EF-4	WOMEN'S	137	-	-	-	-	-	-	-	-	100	200
	MEN'S	121	-	-	-	-	-		-	-	100	200
EF-5	JANITOR'S CLOSET	14	-	-	-	-	-		-	-	-	75
EF-6	WAREWASHER	-	-	-	-	-	-	-	-	-	350	600
									989	3630	1009	3450

* ZONE AIR DISTRIBUTION EFFECTIVENESS BASED ON IMC TABLE 403.3.1.1.2 FOR CEILING SUPPLY OF WARM AIR 15° F OR MORE ABOVE SPACE TEMPERATURE AND CEILING RETURN.
** VENTILATION SYSTEM EFFICIENCY BASED ON IMC TABLE 403.3.1.1.2.3.2.
*** CORRECTED REQUIRED O/A INTAKE REQUIRED FOR SYSTEM CALCULATED BASED ON IMC SECTION 403.3.1.1.2.3.3.

- M19 PROVIDE AIR INTAKE AND FLUE EXHAUST PER MANUFACTURER'S INSTALLATION MANUAL. AIR INTAKE AND FLUE EXHAUST TO COMBINE WITH CONCENTRIC VENT KIT. REFER TO 6/P3.0 FOR FURTHER DETAILS.
- 20 10" TYPE 304 STAINLESS STEEL DUCT FROM TYPE II EXHAUST HOOD UP THROUGH ROOF TO EXHAUST FAN. DUCTWORK SHALL BE PITCHED TOWARDS TYPE II EXHAUST HOOD. EXTERNALLY INSULATE EXHAUST DUCT FROM TYPE II EXHAUST HOOD CONNECTION TO ROOF PENETRATION.

AIR BALANCE SCHEDULE

UNIT	SUPPLY AIR	RETURN AIR	OUTDOOR AIR	EXHAUST AIR	PRESSURE
RTU-1	7200	5500	1700		1700
RTU-2	2400	1600	800		800
RTU-3	5000	3870	1130		1130
EF-1				1000	-1000
EF-2				575	-575
EF-3				800	-800
EF-4				400	-400
EF-5				75	-75
EF-6				600	-600
TOTALS	14600	10970	3630	3450	180

NOTES:
1. BALANCING TOLERANCES ARE AS FOLLOWS:
   HOODS: 0% TO +10%
   OUTDOOR AIR: 0% TO +10%
   SUPPLY AND RETURN AIR DIFFUSERS: -10% TO +10%
   TOILET EXHAUST AIR: -10% TO +10%
2. BALANCE ROOFTOP UNIT SUPPLY AND RETURN AIR PRIOR TO TURNING ON EXHAUST FANS.
3. EXHAUST HOODS SHALL BE BALANCED WITH A 4" VANE ANEMOMETER.
4. RTU BLOWER TO RUN CONTINUOUSLY DURING OCCUPIED HOURS. REFER TO SEQUENCE OF OPERATIONS ON M1.0 AND E3.2 FOR HOOD/FAN INTERLOCK DETAILS.
5. EF-6 DOES NOT RUN CONTINUOUSLY - VALUES SHOWN IN AIR BALANCE SCHEDULE REFLECT OPERATIONAL STATE. WHEN EF-6 IS NOT OPERATIONAL, RTU-2 SHALL BE DECREASED BY 600 CFM ACCORDINGLY. REFER TO M1.0 FOR ADDITIONAL DETAILS OF SEQUENCE OF OPERATIONS AND INTERLOCKING REQUIREMENTS.

HEATING SCHEDULE

EQUIPMENT	INPUT (BTU/HR)	OUTPUT (BTU/HR)	REQUIRED HEAT (BTU/HR)
ROOFTOP UNIT (RTU-1)	260,000	211,000	147,799
ROOFTOP UNIT (RTU-2)	108,000	87,000	73,843
ROOFTOP UNIT (RTU-3)	260,000	211,000	119,017
TOTALS		509,000	340,659

LINGLE DESIGN GROUP INC
158 WEST MAIN STREET
LENA, IL 61048
815.369.9155
1764 BLAKE ST
DENVER, CO 8020
303.974.5873
WWW.LINGLEDESIGN.COM

WCW Engineers, Inc.
760 Creel Drive
Wood Dale, Illinois 60191
Tel 630/595-8800
Fax 630/595-8818
www.WCWengineers.com

© ALL DRAWINGS AND WRITTEN MATERIAL CONTAINED HEREIN ARE THE PROPERTY OF THE LINGLE DESIGN GROUP, INC. THEY MAY NOT BE REVISED, COPIED, REUSED, OR DISCLOSED IN ANY MANNER WITHOUT WRITTEN AUTHORIZATION FROM THE ARCHITECT.

LICENSE EXPIRATION: APR 30, 2027

JEFF A. KLINKERT LICENSED PE31503 KANSAS PROFESSIONAL ENGINEER

DATE ISSUED: AUG 2, 2026

STATE #: 150405
PROJECT #: 25-079
NATIONAL #: 44936
DRAWN BY: SC
CHECKED BY: JK

DATE:
10/15/25 - PERMIT / BID SET

REVISIONS
1. 11/12/25 - QC COMMENTS/PROTO UPDATE
2. 02/12/26 - CITY COMMENTS
3. 03/10/26 - DECOR UPDATE
4. 08/02/26 - OWNER COMMENTS / PROTOTYPE UPDATES

CLIENT
McDonald's USA, LLC

PROTOTYPE
BB20 4590 MS-HB
ISSUE DATE 08/27/25

ADDRESS
2320 METROPOLITAN AVE
KANSAS CITY, KS 66106

SHEET TITLE
DUCTWORK PLAN

SHEET NUMBER:
M1.2

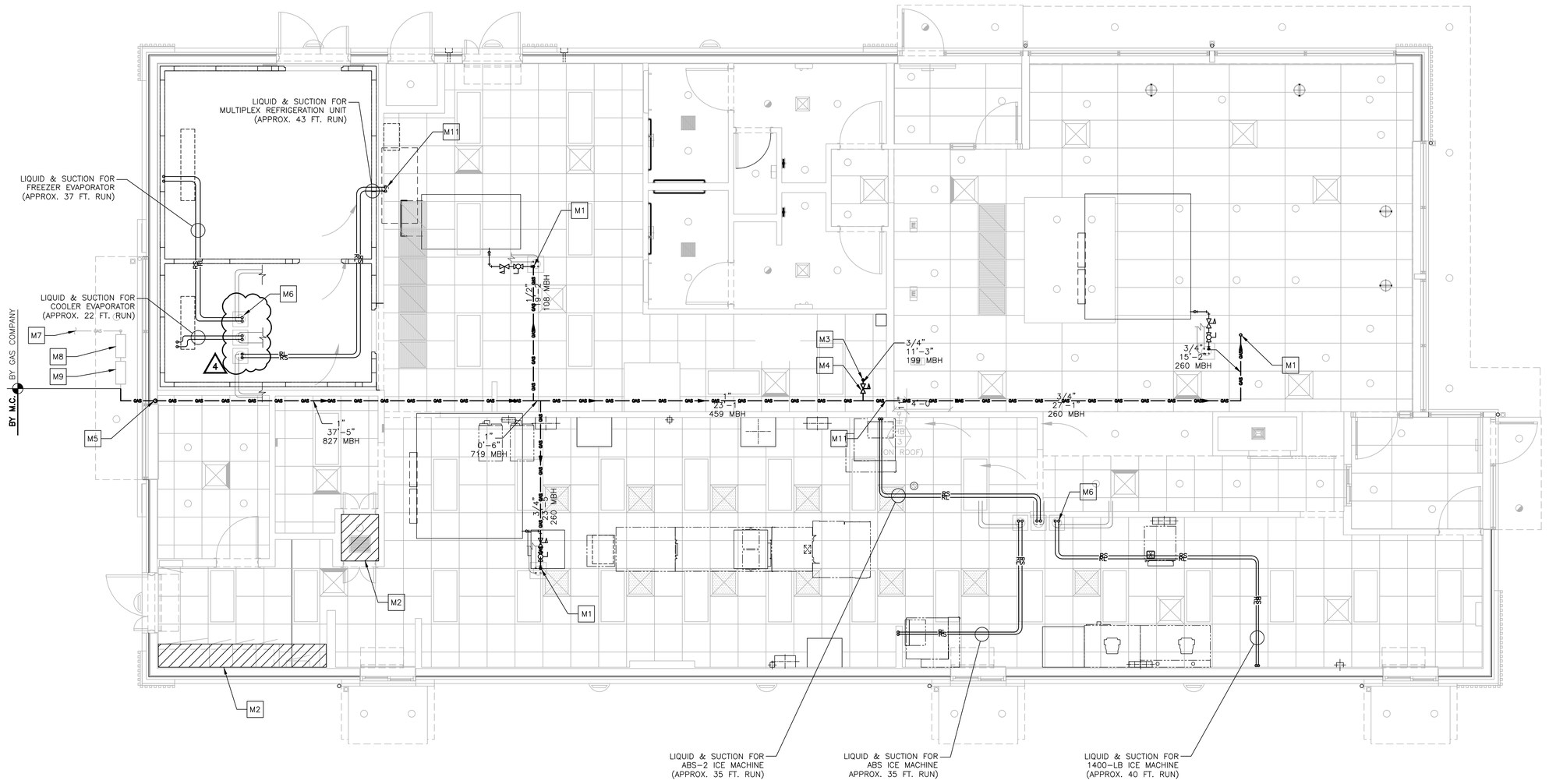

1 M1.4 MECHANICAL PIPING PLAN
1/4"=1'-0"

DRAWING NOTES

1. GAS PIPING LENGTHS ARE APPROXIMATE AND ARE SHOWN FOR SIZING PURPOSES ONLY.
2. REFRIGERANT PIPE SIZES SHALL BE PER MANUFACTURER'S INSTALLATION INSTRUCTIONS.

KEYED NOTES

- M1 GAS PIPE UP THROUGH ROOF TO RTU.
- M2 UTILITIES SHALL NOT BE ROUTED ABOVE TECH. CLOSET. OR SWITCHGEAR.
- M3 GAS PIPE DOWN TO WATER HEATER – APPROX. 10 FT. DROP
- M4 SIZE REGULATOR PROPERLY FOR APPLICATION – SET GAS PRESSURE REGULATOR OUTLET PRESSURE TO 10" W.C. AND PROVIDE VENT THROUGH ROOF AS REQUIRED.
- M5 GAS PIPE UP IN WALL – APPROX. 10 FT. RISE
- M6 REFRIGERANT LIQUID AND SUCTION LINES UP THROUGH ROOF TO CONDENSING UNITS (TYP. 6 PLACES – SEE DETAIL 3 ON DRAWING M3.0)
- M7 INCOMING SERVICE LINE – SEE GAS PIPING NOTES ON DRAWING M4.0
- M8 INCOMING SERVICE REGULATOR SET TO 7" W.C.
- M9 INCOMING SERVICE METER – SEE GAS LOAD SCHEDULE FOR SIZING
- M10 REFRIGERANT LINES DOWN TO SODA SYSTEM (MULTIPLEX).
- M11 PROPERLY SEAL ALL PIPE PENETRATIONS THROUGH DRAFT STOP WALL (TYP.)

GAS LOAD SCHEDULE

EQUIPMENT	INPUT (BTU/HR)	GAS FLOW (1,000 BTU/CF) (CF/HR)
ROOFTOP UNIT (RTU-1)	260,000	260
ROOFTOP UNIT (RTU-2)	108,000	108
ROOFTOP UNIT (RTU-3)	260,000	260
WATER HEATER (WH-1)	199,000	199
TOTAL	827,000	827

PIPING KEY

1 1/2" — PIPE SIZE
10'-11" — PIPE LENGTH
1010 MBH — LOADING ON PIPE LENGTH

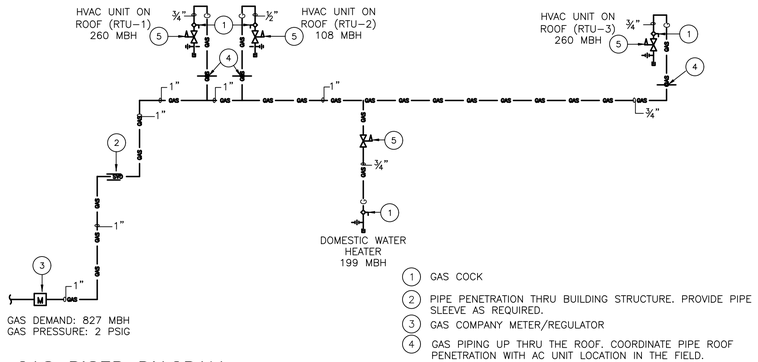

GAS RISER DIAGRAM

NOT TO SCALE

1. GAS COCK
2. PIPE PENETRATION THRU BUILDING STRUCTURE. PROVIDE PIPE SLEEVE AS REQUIRED.
3. GAS COMPANY METER/REGULATOR
4. GAS PIPING UP THRU THE ROOF. COORDINATE PIPE ROOF PENETRATION WITH AC UNIT LOCATION IN THE FIELD.
5. GAS REGULATOR (SEE DETAIL 4/M3.0)

LINGLE DESIGN GROUP INC
158 WEST MAIN STREET
LENA, IL 61048
815.369.9155
1764 BLAKE ST
DENVER, CO 8020
303.974.5873
WWW.LINGLEDESIGN.COM

WCW Engineers, Inc.
760 Creel Drive
Wood Dale, Illinois 60191
Tel 630/595-8800
Fax 630/595-8818
www.WCWengineers.com

© ALL DRAWINGS AND WRITTEN MATERIAL CONTAINED HEREIN ARE THE PROPERTY OF THE LINGLE DESIGN GROUP, INC. THEY MAY NOT BE REVISED, COPIED, REUSED, OR DISCLOSED IN ANY MANNER WITHOUT WRITTEN AUTHORIZATION FROM THE ARCHITECT.

LICENSE EXPIRATION: APR 30, 2027

JEFF A. KLINKERT LICENSED PE31503 KANSAS PROFESSIONAL ENGINEER

DATE ISSUED: AUG 2, 2026

STATE: 150405
PROJECT #: 25-079
NATIONAL #: 44936
DRAWN BY: SC
CHECKED BY: JK

DATE: 10/15/25 - PERMIT / BID SET

REVISIONS
1. 11/12/25 - QC COMMENTS/PROTO UPDATE
2. 02/12/26 - CITY COMMENTS
3. 03/10/26 - DECOR UPDATE
4. 08/02/26 - OWNER COMMENTS / PROTOTYPE UPDATES

CLIENT
McDonald's USA, LLC

PROTOTYPE
BB20 4590 MS-HB
ISSUE DATE 08/27/25

ADDRESS
2320 METROPOLITAN AVE
KANSAS CITY, KS 66106

SHEET TITLE
MECH. PIPING PLAN

SHEET NUMBER:
M1.4

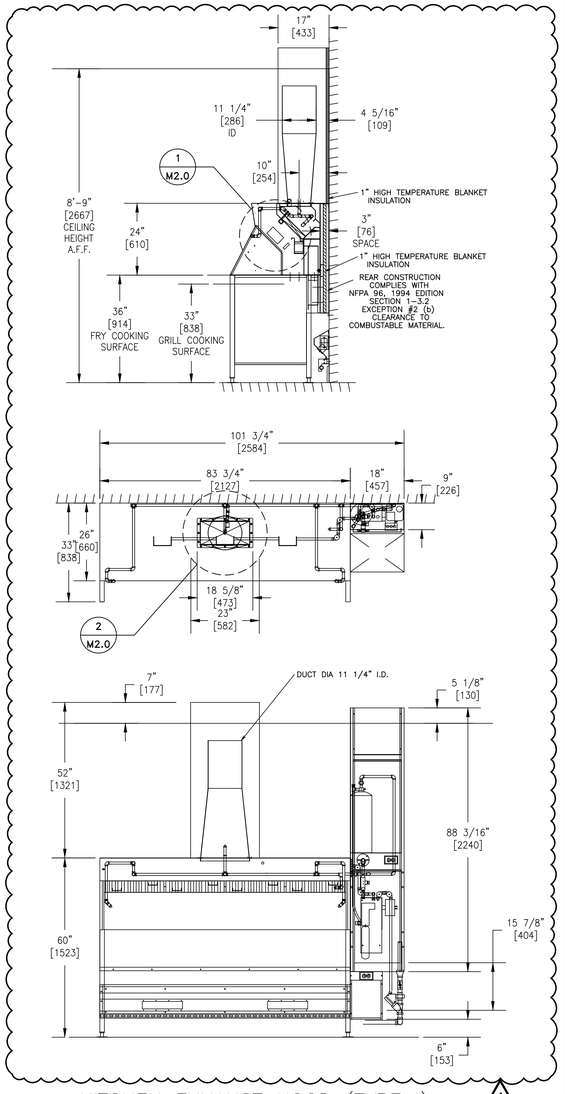

KITCHEN EXHAUST HOOD (TYPE I)

TAG: KH-1 (SEE KITCHEN EXHAUST HOOD SCHEDULE)
SCALE: ½"=1'-0"

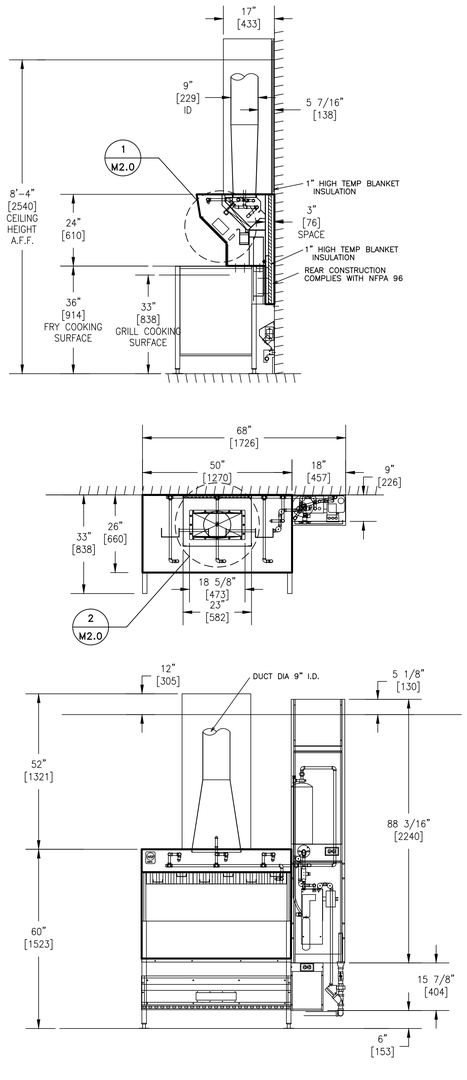

KITCHEN EXHAUST HOOD

TAG: KH-2 (SEE KITCHEN EXHAUST HOOD SCHEDULE)
SCALE: ½"=1'-0"

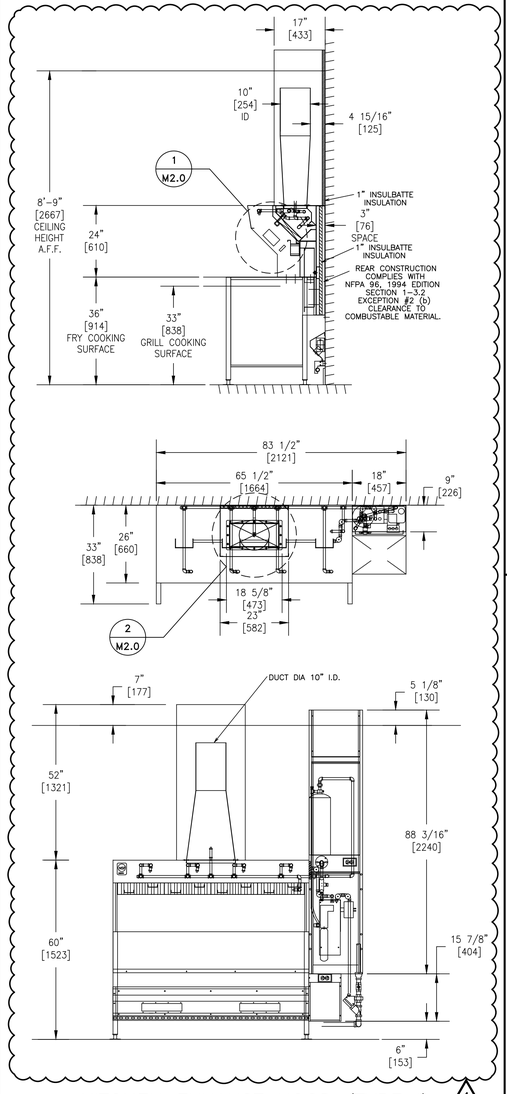

KITCHEN EXHAUST HOOD (TYPE I)

TAG: KH-3 (SEE KITCHEN EXHAUST HOOD SCHEDULE)
SCALE: ½"=1'-0"

McDONALD'S CORPORATION
OAK BROOK, ILLINOIS 60521

EQUIP. ID. **EXHAUST HOOD: UH SERIES**
MANUF. ID. HRD **SERIAL #** 512341
MANUF. EQUIP. ID. UH5008LP **MFG DATE** 05/2012

LENGTH OF HOOD	MINIMUM DESIGN EXHAUST AIRFLOW, CFM/ft (CUM/m) OF HOOD LENGTH W/DUCT	MINIMUM DESIGN EXHAUST AIRFLOW, CFM/ft (CUM/m) OF HOOD LENGTH W/ESP
28" (68)	128 (12)	128 (12)
34.5" (88)	143 (13.3)	137 (12.8)
35-122" (89-310)	166 (15.5)	151 (14.0)
133.75" (339.7)	132 (12.3)	132 (12.3)

FOR USE OVER COMMERCIAL GAS OR ELECTRIC COOKING EQUIPMENT UP TO 400°F (204°C) [EXCEPT UPPER PLATEN OF 2-SIDED COOKER MAY BE UP TO 425°F (218°C)].

-22" (558.8mm) MAXIMUM CLEARANCE FROM COOKING SURFACE TO FRONT LOWER EDGE OF HOOD
-16" (406.4mm) MINIMUM C.EARANCE FROM COOKING SURFACE TO FRONT LOWER EDGE OF HOOD
-2 1/4" (57.15mm) MINIMUM SIDE HOOD OVERHANG FROM EDGE OF COOKING SURFACE
-18 1/4" (412.75mm) MAXIMUM FRONT HOOD SETBACK FROM EDGE OF COOKING SURFACE

-THESE HOODS ARE LISTED FOR DIRECT REAR MOUNTING ON A COMBUSTIBLE SURFACE
-HOODS MAY BE INSTALLED WITH DUCTS OR ESP DIRECTLY ON TOP OF HOOD ASSEMBLY.
-WHEN A GRILL IS OPERATED UNDER THE HOOD, AN EXTENSION SIDE PANEL (REMOVABLE OR INTEGRAL) MUST BE MOUNTED AT WHICHEVER END(S) OF HOOD IS ADJACENT TO THE GRILL(S).
-FILTERS SHALL ONLY BE REPLACED WITH FILTERS TESTED TO UL 1046 S"ANDARDS.
-FOR USE w/GARLAND MODEL MEVE GRILL OR FOR USE w/TAYLOR MODEL C842 GRILL
-ONLY THE REMOVABLE SIDESKIRTS WILL BE INDIVIDUALLY MARKED AS FOLLOWS: UH SERIES/GRILL/RH or LH
-THESE HOODS ARE LISTED FOR COMPLIANCE WITH ICBO, BOCA, AND SBCCI PER NFR-320
-THESE HOODS MUST BE INSTALLED PER NFPA-96

Intertek
4001095

EXHAUST HOOD WITHOUT EXHAUST DAMPERS (COA #5535)

DETAIL

UL LABEL
SCALE: NONE

1 M2.0

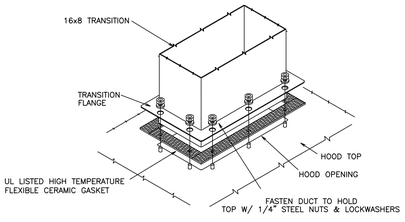

DETAIL

HOOD CONNECTION
SCALE: NONE

2 M2.0

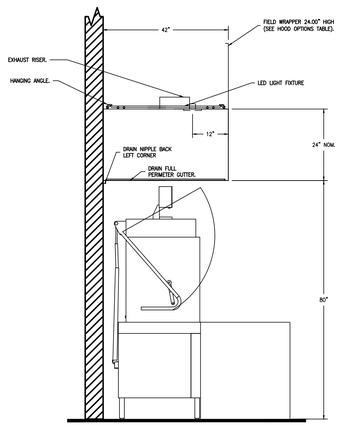

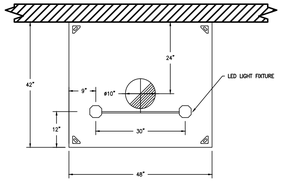

KITCHEN EXHAUST HOOD

TAG: KH-4 (SEE KITCHEN EXHAUST HOOD SCHEDULE)
SCALE: ½"=1'-0"

HOOD INFORMATION

HOOD NO.	TAG	MODEL	LENGTH	MAX. COOKING TEMP.	APPLIANCE DUTY	DESIGN CFM/ft	TOTAL EXH. CFM	EXHAUST PLENUM SIZE(S)						HOOD CONSTRUCTION	HOOD CONFIG.	
								WIDTH	LENG.	HEIGHT	DIA.	CFM	VEL.	S.P.		END TO END	ROW
1	DISH	CLASS 2	48"	NA	DISH	150	600			4"	10"	600	1100	-0.25"	304 SS	ALONE	ALONE

HOOD OPTIONS

HOOD NO.	TAG	OPTION
1	DISH	FASCIA PANEL 14.00" HIGH FRONT, LEFT, RIGHT (FASCIA HEIGHT INCREASES FOR TALLER CEILING)

DRAWING NOTES

1. 16 GA. STAINLESS STEEL MATERIAL USED FOR HOOD CONSTRUCTION
2. FILTER BAFFLE:
   UL FILE R14372, VOL. 1, SEC. 1
   UL CONTROL NUMBER 5L65
   MEA-446-92-M
3. EXHAUST HOOD:
   UL FILE MH12755, VOL. 4
   UL CONTROL NUMBER 78L1
4. UTILITY CHASE AND RACEWAY:
   UL FILE E163328, VOL.1, SEC.3
5. HIGH TEMP GASKET:
   UL FILE MH12755, VOL. 2, SEC. 1, ILL. 9
6. HOOD CONSTRUCTION COMPLIES WITH NSF STANDARD 2
7. HOOD PERFORMANCE TESTED IN ACCORDANCE WITH UL 710
8. UL 300 AND NFPA 17A COMPLIANT R-102 WET CHEMICAL SYSTEM INCLUDED WITH HOOD INSTALLATION
9. ANSUL CONNECTIONS AND STARTUP BY APPROVED ANSUL REPRESENTATIVE
10. REFER E3.2 FOR HOOD/FAN INTERLOCK DETAILS
11. CAPTURE JET PLENUMS ARE TO BE ATTACHED WHEN CALLED OUT PER KITCHEN SCHEDULE.

LINGLE DESIGN GROUP INC
158 WEST MAIN STREET
LENA, IL 61048
815.369.9155
1764 BLAKE ST
DENVER, CO 8020
303.974.5873
WWW.LINGLEDESIGN.COM

WCW Engineers, Inc.
760 Creel Drive
Wood Dale, Illinois 60191
Tel. 630/595-8800
Fax 630/595-8818
www.WCWengineers.com

© ALL DRAWINGS AND WRITTEN MATERIAL CONTAINED HEREIN ARE THE PROPERTY OF THE LINGLE DESIGN GROUP, INC. THEY MAY NOT BE REVISED, COPIED, REUSED, OR DISCLOSED IN ANY MANNER WITHOUT WRITTEN AUTHORIZATION FROM THE ARCHITECT.

LICENSE EXPIRATION: APR 30, 2027

JEFF A. KLINKERT LICENSED PE31503 KANSAS PROFESSIONAL ENGINEER

DATE ISSUED: AUG 2, 2026

STAGE: 150405
PROJECT #: 25-079
NATIONAL #: 44936
DRAWN BY: SC
CHECKED BY: JK

DATE:
10/15/25 - PERMIT / BID SET

REVISIONS
1. 11/12/25 - QC COMMENTS/PROTO UPDATE
2. 02/12/26 - CITY COMMENTS
3. 03/10/26 - DECOR UPDATE
4. 08/02/26 - OWNER COMMENTS / PROTOTYPE UPDATES

CLIENT
McDonald's USA, LLC

PROTOTYPE
BB20 4590 MS-HB
ISSUE DATE 08/27/25

ADDRESS
2320 METROPOLITAN AVE
KANSAS CITY, KS 66106

SHEET TITLE
EXHAUST HOODS

SHEET NUMBER:
M2.0

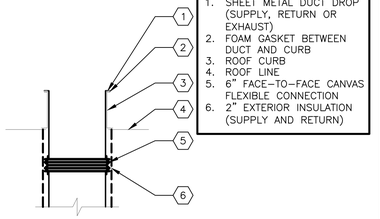

KEYED NOTES:
1. SHEET METAL DUCT DROP (SUPPLY, RETURN OR EXHAUST)
2. FOAM GASKET BETWEEN DUCT AND CURB
3. ROOF CURB
4. ROOF LINE
5. 6" FACE-TO-FACE CANVAS FLEXIBLE CONNECTION
6. 2" EXTERIOR INSULATION (SUPPLY AND RETURN)

DETAIL 1 / M3.0
DUCT DROP INSTALLATION
SCALE: NONE

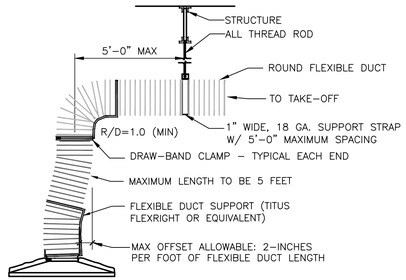

DETAIL 2 / M3.0
DIFFUSER/GRILLE CONNECTION
SCALE: NONE

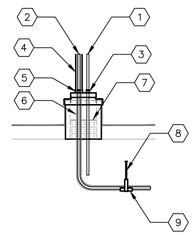

KEYED NOTES:
1. REFRIGERANT LIQUID LINE
2. REFRIGERANT SUCTION LINE WITH 1" THICK EXTERNAL FOAM INSULATION (ARMAFLEX BY ARMACELL OR EQUAL)
3. STAINLESS STEEL CLAMP
4. APPLY WEATHERPROOFING OVER FOAM INSULATION (ALUMAGUARD BY POLYGUARD OR EQUAL)
5. WRAP FOAM INSULATION OVER PIPE PORTAL NIPPLE AND STAINLESS STEEL CLAMP
6. RESTART FOAM INSULATION IMMEDIATELY AFTER PIPE PORTAL PENETRATION
7. INSULATE BOTTOM OF ROOF PORTAL CURB (MIN. R-19)
8. PIPE HANGER
9. LIGHT GAUGE GALVANIZED STEEL PROTECTIVE SHIELD

DETAIL 3 / M3.0
REFRIGERANT PIPE INSTALLATION
SCALE: NONE

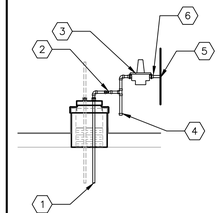

KEYED NOTES:
1. GAS PIPING
2. SHUT-OFF VALVE
3. PRESSURE REGULATOR (PROPERLY SIZED FOR APPLICATION)
4. DIRT LEG
5. ROOFTOP UNIT ENTRY
6. UNION (TYP.)

DETAIL 4 / M3.0
GAS PIPE INSTALLATION
SCALE: NONE

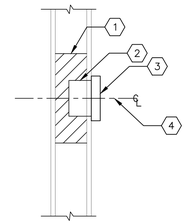

KEYED NOTES:
1. PROVIDE BATT INSULATION FOR TEMPERATURE SENSORS INSTALLED IN HOLLOW CAVITY WALLS
2. 2x4 ELECTRICAL BOX
3. SENSOR (TEMPERATURE, HUMIDITY OR CO2)
4. MOUNT SENSOR(S) BETWEEN 4'-0" TO 4'-6" A.F.F.

DETAIL 5 / M3.0
REMOTE SENSOR INSTALLATION
SCALE: NONE

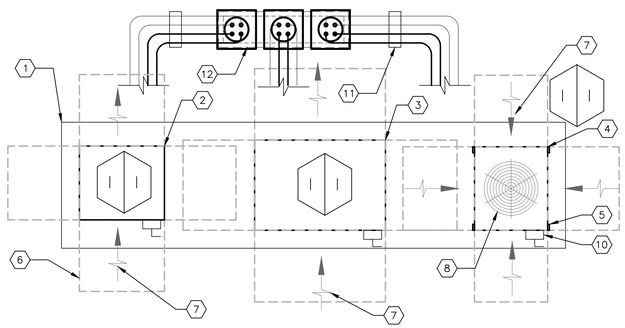

KEYED NOTES:
1. 180"Lx43"Wx14"H EQUIPMENT PLATFORM MANUFACTURED BY RPS OR EQUAL
2. 28⅝"Lx24¾"Wx19¾"H CONDENSING UNIT (COOLER).
3. 43⅜"Lx30½"Wx29¾"H CONDENSING UNIT (FREEZER).
4. 29"Lx24½"Wx34"H CONDENSING UNIT (MULTIPLEX).
5. FASTEN CONDENSING UNIT TO TOP OF PLATFORM AND SEAL FASTENER PENETRATIONS WITH UV RESISTANT SEALANT
6. OUTLINE OF SERVICE CLEARANCE EXTENDING 3'-0" FROM CONDENSING UNIT ON ALL SIDES
7. CONDENSER AIR INTAKE
8. CONDENSER FAN OUTLET ON TOP OF UNIT
9. CONDENSER FAN OUTLET ON SIDE OF UNIT
10. DISCONNECT SWITCH FURNISHED WITH UNIT
11. PROVIDE PIPE SUPPORT AS REQUIRED (TREATED LUMBER IS NOT ACCEPTABLE)
12. MULTIPLE PIPE PORTAL MANUFACTURED BY RPS OR EQUAL

CONDUIT SIZES: (PER CONDENSING UNIT)
(1) ¾" POWER
(1) ¾" CONTROL

REFRIGERANT PIPING SIZES:
SEE MANUFACTURER'S INSTALLATION INSTRUCTIONS FOR RECOMMENDED REFRIGERANT PIPE SIZING

DETAIL 6 / M3.0
REMOTE CONDENSER UNITS (CU-4, CU-5 & CU-6)
SCALE: ½"=1'-0"

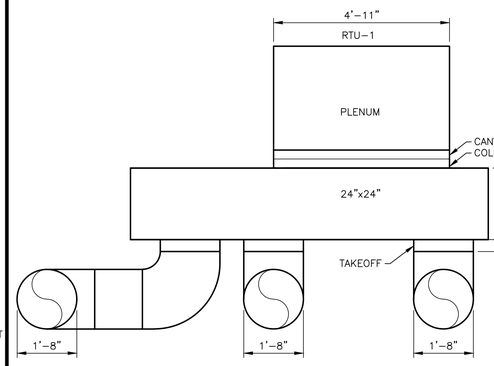

DETAIL 7 / M3.0
VIEW TOWARDS REAR OF KITCHEN AT DUCT DROPS
SCALE: ½"=1'-0"

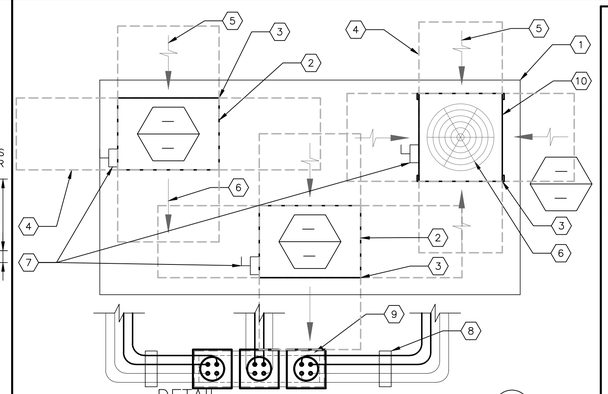

KEYED NOTES:
1. 141"x72"x14"H EQUIPMENT PLATFORM MANUFACTURED BY RPS OR EQUAL
2. 34"x24⅛"x25⅞"H CONDENSING UNIT
3. FASTEN CONDENSING UNIT TO TOP OF PLATFORM AND SEAL FASTENER PENETRATIONS WITH UV RESISTANT SEALANT
4. OUTLINE OF SERVICE CLEARANCE EXTENDING FROM CONDENSING UNIT ON ALL SIDES
5. CONDENSER AIR INTAKE
6. CONDENSER FAN OUTLET
7. DISCONNECT SWITCH PROVIDED BY ELECTRICAL CONTRACTOR
8. PROVIDE PIPE SUPPORT AS NECESSARY (TREATED LUMBER IS NOT ACCEPTABLE)
9. MULTIPLE PIPE PORTAL MANUFACTURED BY RPS OR EQUAL
10. 29½"x28"x38"H CONDENSING UNIT

CONDUIT SIZES: (PER CONDENSING UNIT)
(1) ¾" POWER
(1) ¾" CONTROL

REFRIGERANT PIPING SIZES:
(PER CONDENSING UNIT)
ICE MACHINE - ½" LIQUID, ¾" SUCTION (CU-3 CONDENSING UNIT)
ICE MACHINE - ⅜" LIQUID, ½" SUCTION

DETAIL 7B / M3.0
REMOTE CONDENSER UNIT (CU-1, CU-2 & CU-3)
SCALE: ½"=1'-0"

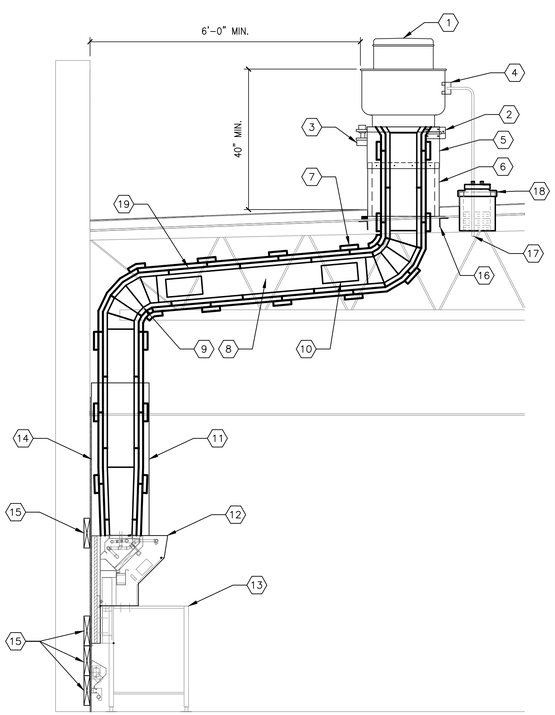

KEYED NOTES:
1. UPBLAST EXHAUST FAN (SEE EXHAUST FAN SCHEDULE)
2. HINGED CURB CAP FOR CLEANING ACCESS (FURNISHED WITH FAN)
3. GREASE TRAP (FURNISHED WITH FAN)
4. NEMA 3R DISCONNECT SWITCH (FURNISHED WITH FAN)
5. 12" HIGH CURB EXTENSION (FURNISHED WITH FAN)
6. 18" HIGH CURB (FURNISHED WITH FAN)
7. TWO (2) LAYERS OF 1½" THICK DUCT WRAP TO MEET ASTM E2336 INSTALLED PER MANUFACTURER'S INSTRUCTIONS (SEE MECHANICAL NOTES FOR INSULATION SPECIFICATION)
8. 16 GAUGE BLACK IRON (CARBON STEEL) OR 18 GAUGE STAINLESS STEEL DUCTWORK WELDED LIQUID-TIGHT
9. 5-GORE BLACK IRON (CARBON STEEL) RADIUS ELBOW
10. 12"x6" ACCESS DOOR AT ALL CHANGES IN DIRECTION
11. STAINLESS STEEL FASCIA PANEL TO PROTECT DUCTWORK AND INSULATION
12. BACKSHELF TYPE EXHAUST HOOD (SEE KITCHEN EXHAUST HOOD SCHEDULE)
13. COOKING APPLIANCE (SEE KITCHEN DRAWINGS)
14. REAR WALL CONSTRUCTION SHALL CONSIST OF CERAMIC TILE OR MIN. 22 GAUGE STAINLESS STEEL OVER ⅝" TYPE X GYPSUM BOARD OR ½" CEMENT BOARD FROM FLOOR TO CEILING AND EXTENDING 24" TO EACH SIDE OF THE HOOD INSTALLED ON NON-COMBUSTIBLE WALL (REFER TO SHEET A1.0 FOR MORE INFORMATION.
15. 2x10 LIGHT GAUGE STEEL FOR SUPPORT BLOCKING FOR HOOD AND RACEWAY (COORDINATE INSTALLATION WITH HOOD INSTALLER)
16. STRUCTURAL FRAMING FOR ROOF OPENING (SEE STRUCTURAL DRAWINGS)
17. TRANSITION TO FLEXIBLE CONDUIT UNDER ROOF PENETRATION WHERE ALLOWED BY CODE.
18. ROOF PIPE PORTAL, RPS-N18(1) RC-2A 12x12x11H.
19. ¼" PER FOOT SLOPE PITCHED BACK TOWARDS THE HOOD.

SECTION 8 / M3.0
KITCHEN EXHAUST HOOD INSTALLATION
SCALE: ½"=1'-0"

KEYED NOTES:
1. OUTLINE OF ROOFTOP UNIT
2. ROOF CURB
3. SUPPLY AND RETURN AIR DUCT DROPS
4. ROOF OPENING

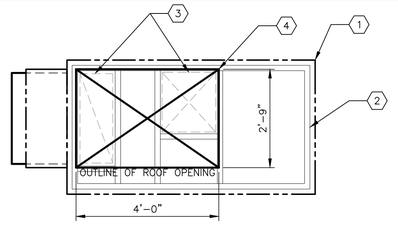

RTU-2 (4-TONS)

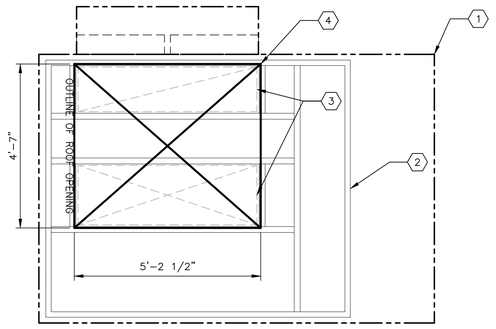

RTU-1 (20 TONS) & RTU-3 (13-TONS)

DETAIL 9 / M3.0
ROOF OPENINGS
SCALE: ½"=1'-0"

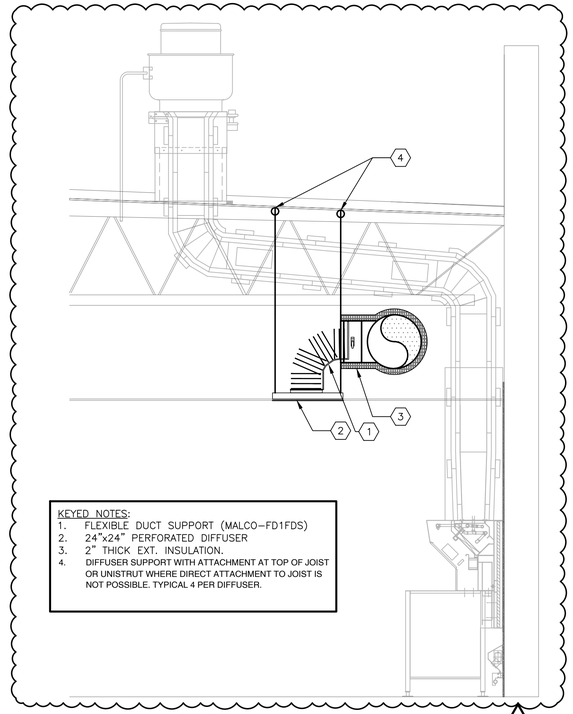

KEYED NOTES:
1. FLEXIBLE DUCT SUPPORT (MALCO-FD1FDS)
2. 24"x24" PERFORATED DIFFUSER
3. 2" THICK EXT. INSULATION.
4. DIFFUSER SUPPORT WITH ATTACHMENT AT TOP OF JOIST OR UNISTRUT WHERE DIRECT ATTACHMENT TO JOIST IS NOT POSSIBLE. TYPICAL 4 PER DIFFUSER.

SECTION 10 / M3.0
SUPPLY (S-1) PLENUM INSTALLATION
SCALE: ½"=1'-0"

4

LINGLE DESIGN GROUP INC
158 WEST MAIN STREET
LENA, IL 61048
815.369.9155
1764 BLAKE ST
DENVER, CO 8020
303.974.5873
WWW.LINGLEDESIGN.COM

WCW Engineers, Inc.
760 Creel Drive
Wood Dale, Illinois 60191
Tel. 630/595-8800
Fax 630/595-8818
www.WCWengineers.com

© ALL DRAWINGS AND WRITTEN MATERIAL CONTAINED HEREIN ARE THE PROPERTY OF THE LINGLE DESIGN GROUP, INC. THEY MAY NOT BE REVISED, COPIED, REUSED, OR DISCLOSED IN ANY MANNER WITHOUT WRITTEN AUTHORIZATION FROM THE ARCHITECT.

LICENSE EXPIRATION: APR 30, 2027
JEFF A. KLINKERT LICENSED PE31503 KANSAS PROFESSIONAL ENGINEER
DATE ISSUED: AUG 2, 2026

STARTED: 150405
PROJECT #: 25-079
NATIONAL #: 44936
DRAWN BY: SC
CHECKED BY: JK

DATE:
10/15/25 - PERMIT / BID SET

REVISIONS
1 11/12/25 - QC COMMENTS/PROTO UPDATE
2 02/12/26 - CITY COMMENTS
3 03/10/26 - DECOR UPDATE
4 08/02/26 - OWNER COMMENTS / PROTOTYPE UPDATES

CLIENT
McDonald's USA, LLC

PROTOTYPE
BB20 4590 MS-HB
ISSUE DATE 08/27/25

ADDRESS
2320 METROPOLITAN AVE
KANSAS CITY, KS 66106

SHEET TITLE
DETAILS

SHEET NUMBER:
M3.0

MECHANICAL NOTES

GENERAL:
1. ALL WORK PERFORMED SHALL BE IN ACCORDANCE WITH ALL LOCAL CODES AND ACCEPTABLE TO THE AUTHORITY HAVING JURISDICTION.
2. ALL DIMENSIONS, CLEARANCES AND TOLERANCES SHALL BE VERIFIED PRIOR TO INSTALLATION.
3. ALL MATERIALS, FIXTURES AND EQUIPMENT USED SHALL BE IN ACCORDANCE WITH McDONALD'S SPECIFICATIONS. SPECIFICATIONS ARE CONTAINED WITHIN THESE DRAWINGS AND THE McDONALD'S PROJECT MANUAL. ANY CONTRACTOR IN NEED OF A COPY OF THE McDONALD'S PROJECT MANUAL SHALL CONTACT THE McDONALD'S AREA CONSTRUCTION MANAGER. ANY VARIANCE FROM THE McDONALD'S SPECIFICATIONS SHALL BE REVIEWED AND APPROVED BY THE ENGINEER–OF–RECORD.
4. ALL EQUIPMENT SHALL BE INSTALLED IN ACCORDANCE WITH ITS LISTING AND/OR THE MANUFACTURER'S INSTALLATION INSTRUCTIONS.
5. SEE COORDINATION SCHEDULE FOR ADDITIONAL SCOPE OF WORK.
6. PRIOR TO BUILDING TURNOVER, A COMPLETE START–UP, TEST, ADJUST AND BALANCE SHALL BE PERFORMED ON ALL MECHANICAL SYSTEMS. THIS WORK SHALL BE PERFORMED BY A CERTIFIED TEST AND BALANCE CONTRACTOR. A CERTIFIED TEST AND BALANCE CONTRACTOR CAN BE FOUND BY VISITING:
   HTTP://WWW.AABCHQ.COM/DIRECTORY
   HTTP://WWW.NEBB.ORG/DIRECTORY.HTM
   HTTP://WWW.TABBCERTIFIED.ORG/SITE/CONTENT/CONTRACTORS/SEARCH
7. UPON COMPLETION OF THE PUNCHLIST, THE MECHANICAL CONTRACTOR AND TEST AND BALANCE CONTRACTOR SHALL SUBMIT REDLINED OR AS–BUILT DRAWINGS ALONG WITH THE TEST AND BALANCE REPORT AND ALL EQUIPMENT OPERATION AND MAINTENANCE MANUALS TO THE McDONALD'S AREA CONSTRUCTION MANAGER. A MINIMUM OF TWO (2) COPIES SHALL BE PROVIDED, ONE (1) FOR REGIONAL RECORDS AND ONE (1) FOR THE RESTAURANT.
8. ALL PENETRATIONS OF FIRE–RATED WALLS SHALL BE FIRESTOPPED WITH AN APPROVED AND LISTED FIRESTOPPING SYSTEM.

VENTILATION SYSTEMS:
1. ALL SHEET METAL DUCTWORK SHALL BE FABRICATED AND INSTALLED IN ACCORDANCE WITH LOCAL CODES AND SMACNA STANDARDS.
2. ALL DUCTWORK DIMENSIONS ARE INTERNAL FREE AREA DIMENSIONS AND SIZED FOR 0.08" W.C. PER 100 FT. OF DUCT.
3. ALL SHEET METAL DUCTWORK SHALL BE CONSTRUCTED IN ACCORDANCE WITH SMACNA TABLES FOR 2" W.C. AND SHALL BE SUPPORTED WITH AN APPROVED HANGER AT INTERVALS NOT EXCEEDING 10 FT.
4. ALL DUCT DROPS INTO THE BUILDING SHALL BE INSTALLED WITH FLEXIBLE CONNECTIONS TO ISOLATE THE DUCTWORK SYSTEM FROM NOISE AND VIBRATION. FLEXIBLE CONNECTIONS SHALL BE TESTED IN ACCORDANCE WITH UL 181 AND LISTED AS CLASS 0 OR CLASS 1.
5. ALL DUCT DROPS INTO THE BUILDING SHALL BE OFFSET AS NECESSARY TO ALLOW FOR THE CLEAR INSTALLATION OF THE EXTERNAL DUCTWORK INSULATION.
6. ALL DUCTWORK BRANCHES THAT SERVE A SINGLE DIFFUSER SHALL BE SUPPLIED WITH A VOLUME DAMPER FOR BALANCING. BRANCHES THAT SERVE MULTIPLE DIFFUSERS, THE BALANCING IS HANDLED VIA REMOTE DAMPER INSTALLED NEAR THE DIFFUSER. REFER TO M1.2 FOR DAMPER LOCATIONS. VOLUME DAMPER SHALL HAVE A 2" OFFSET TO ACCOMMODATE EXTERNAL INSULATION.
7. TAKE–OFFS FROM RECTANGULAR TO ROUND DUCT SHALL BE DUCTMATE STRAIGHT–SIDED OR CENTER HIGH–EFFICIENCY TAKE–OFFS WITH A 2" DAMPER STAND–OFF TO ACCOMMODATE FOR EXTERNAL INSULATION.
8. ALL DUCTWORK JOINTS, LONGITUDINAL AND TRANSVERSE SEAMS SHALL BE SEALED WITH WELDS, GASKETS, MASTICS (ADHESIVES), TAPES, ETC. ALL SEALANT MATERIALS SHALL BE LISTED IN ACCORDANCE WITH UL 181A OR 181B.
9. ALL SUPPLY AND RETURN SHEET METAL DUCTWORK LOCATED WITHIN THE CEILING SPACE SHALL BE EXTERNALLY INSULATED. INSULATION SHALL BE 2" THICK MICROLITE FSK–100 BY JOHNS MANVILLE OR EQUAL.
10. ALL SUPPLY AND RETURN SHEET METAL DUCTWORK LOCATED OUTSIDE OF THE BUILDING SHALL BE INTERNALLY LINED WITH A 1" THICK FIBERGLASS (MIN. R–4.2) AND EXTERNALLY INSULATED WITH A 2" THICK RIGID POLYSTYRENE, POLYURETHANE OR POLYISOCYANURATE BOARD (MIN. R–8 FOR CLIMATE ZONES 1 THROUGH 4), OR A 3" THICK (MIN R–12 FOR CLIMATE ZONES 5 THROUGH 8). INTERNAL FIBERGLASS INSULATION SHALL BE LINATEX BY JOHNS MANVILLE OR EQUAL. EXTERNAL RIGID BOARD INSULATION SHALL BE THERMAPINK BY OWENS CORNING OR EQUAL.
11. FOR APPLICABLE SITUATIONS OR PLAYPLACE ADDITIONS: ALL EXPOSED SPIRAL DUCTWORK SHALL BE INTERNALLY INSULATED TO PREVENT CONDENSATION (MIN. R–4.3). INTERNAL INSULATION SHALL BE 1" THICK SPIRACOUSTIC PLUS BY JOHNS MANVILLE OR EQUAL.
12. ALL DUCTWORK PENETRATIONS THROUGH FIRE–RATED WALLS, BARRIERS OR PARTITIONS SHALL BE PROTECTED WITH A FIRE DAMPER. THE PERIMETER OF THE FIRE DAMPER SHALL BE FIRESTOPPED WITH AN APPROVED AND LISTED FIRESTOPPING MATERIAL.
13. ALL EXTERIOR SHEET METAL DUCTWORK SHALL BE EXTERNALLY WRAPPED WITH AN APPROVED WEATHERPROOFING MATERIAL TO PROTECT AGAINST WATER PENETRATION AND CORROSION. SIDES AND TOP OF EXTERNAL WEATHERPROOFING SHALL BE ALUMAGUARD 60 MIL UV BARRIER BY POLYGUARD OR EQUAL. BOTTOM OF EXTERNAL WEATHERPROOFING SHALL BE VAPORGUARD 5 MIL MEMBRANE BY POLYGUARD OR EQUAL.
14. ALL FLEXIBLE DUCTWORK, METALLIC AND NONMETALLIC, SHALL CONFORM TO THE FOLLOWING:
   A. 2" THICK INSULATION (R–6.0) SEE NOTE#9 AND TABLE(S) BELOW:

DUCT LOCATION: UNCONDITIONED SPACE			CLIMATE ZONES 1 THROUGH 8
DUCTWORK CLASSIFICATION	PRESSURE	SEAL CLASS	INSULATION
SUPPLY	2.00" W.C.	A	TYPE A (R–6)
RETURN	–2.00" W.C.	A	TYPE A (R–6)
EXHAUST	–2.00" W.C.	A	(*)TYPE A (R–6)
HANGER SUPPORTS	EVERY 6 FT.		1" TYPE B

DUCT LOCATION: EXTERIOR (INCLUDES ATTICS ABOVE INSULATED CEILINGS AND CRAWL SPACES.			CLIMATE ZONES 1 THROUGH 4	CLIMATE ZONES 5 THROUGH 8
DUCTWORK CLASSIFICATION	PRESSURE	SEAL CLASS	INSULATION	INSULATION
SUPPLY	2.00" W.C.	A	TYPE A (R–8)	TYPE A (R–12)
RETURN	–2.00" W.C.	A	TYPE A (R–8)	TYPE A (R–12)
EXHAUST	–2.00" W.C.	A	(*)TYPE A (R–8)	(*)TYPE A (R–12)
HANGER SUPPORTS	EVERY 6 FT.		1" TYPE B	

   (*) EXHAUST DUCTWORK IS ONLY REQUIRED TO BE INSULATED WITHIN 2–FEET OF ROOF PENETRATION. REFER TO "COMMERCIAL KITCHEN EXHAUST SYSTEMS", NOTE#4 FOR FIRE WRAPPING REQUIREMENTS ON KITCHEN GREASE DUCTWORK.

   B. INTEGRAL VAPOR BARRIER
   C. LISTED AND LABELED UL 181, CLASS 0 OR CLASS 1
   D. INSTALLED IN ACCORDANCE WITH:
      i. SMACNA STANDARDS,
      ii. AIR DIFFUSION COUNCIL INSTALLATION GUIDELINES, AND/OR
      iii. MANUFACTURER'S INSTALLATION INSTRUCTIONS
14. FLEXIBLE DUCTWORK SHALL NOT PENETRATE WALLS. SHEET METAL DUCTWORK IS REQUIRED AT ALL FIRE–RATED AND DRAFTSTOP WALL PENETRATIONS.
15. ALL COVERINGS, LININGS AND ADHESIVES (TAPES, ETC.) SHALL HAVE A FLAME–SPREAD INDEX NOT GREATER THAN 25 AND A SMOKE–DEVELOPED INDEX NOT GREATER THAN 50.
16. DUCT–MOUNTED SMOKE DETECTORS, PROVIDED BY ROOFTOP UNIT MANUFACTURER, SHALL BE INSTALLED IN SYSTEMS WITH DESIGN CAPACITY GREATER THAN 2,000 CFM. SEE MECHANICAL DRAWINGS FOR LOCATIONS OF SMOKE DETECTORS. DUCT–MOUNTED SMOKE DETECTORS ARE NOT REQUIRED WHEN THE BUILDING IS PROTECTED THROUGHOUT BY AREA SMOKE DETECTORS CONNECTED TO A FIRE ALARM SYSTEM WHERE THE FIRE ALARM SYSTEM IS DESIGNED TO SHUT DOWN THE ROOFTOP UNITS.
17. ALL SUPPLY AIR DIFFUSERS SHALL BE INSULATED TO PREVENT CONDENSATION.
18. ALL AIR DEVICES LOCATED IN DRYWALL CEILINGS SHALL BE SUPPLIED WITH AN INTEGRAL VOLUME DAMPER ACCESSIBLE FROM THE AIR DEVICE FACE TO FACILITATE BALANCING.
19. ALL OUTDOOR AIR INTAKES SHALL BE LOCATED A MINIMUM OF 10 FT. HORIZONTALLY FROM ANY SOURCE OF CONTAMINATION SUCH AS EXHAUST FANS, PLUMBING VENTS, WATER HEATER FLUES, ETC. WHERE A CONTAMINANT SOURCE IS LOCATED WITHIN 10 FT. OF AN INTAKE, THE INTAKE OPENING SHALL BE LOCATED A MINIMUM OF 2 FT. BELOW THE CONTAMINANT SOURCE.
20. ALL ROOFTOP CONDENSING UNITS THAT DISCHARGE HORIZONTALLY SHALL BE ORIENTED SUCH THAT THE DISCHARGE DOES NOT BLOW IN THE DIRECTION OF AN OUTDOOR AIR INTAKE.

COMMERCIAL KITCHEN EXHAUST SYSTEMS:
1. ALL METAL DUCTWORK USED FOR THE CONVEYANCE OF GREASE–LADEN AIR SHALL BE CONSTRUCTED OF MINIMUM 18 GAUGE STAINLESS STEEL OR 16 GAUGE CARBON STEEL (BLACK IRON).
2. ALL GREASE EXHAUST DUCTWORK JOINTS SHALL BE EITHER TELESCOPING OR BELL TYPE. BUTT–WELDED JOINTS ARE PROHIBITED.
3. ALL GREASE EXHAUST DUCTWORK SEAMS AND JOINTS SHALL BE CONTINUOUSLY WELDED WATER–TIGHT ON THE EXTERNAL SURFACE OF THE DUCT SYSTEM. ALL WELDING SHALL BE PERFORMED BY A CERTIFIED WELDER.
4. ALL GREASE EXHAUST DUCTWORK SHALL BE EXTERNALLY INSULATED WITH A ASTM E2336 LISTED AND LABELED GREASE DUCT ENCLOSURE SYSTEM. INSULATION SHALL BE INSTALLED IN ACCORDANCE WITH ITS LISTING AND THE MANUFACTURER'S INSTALLATION INSTRUCTIONS.
5. ACCESS PANELS SHALL BE PROVIDED AT ALL CHANGES IN DIRECTION OF THE GREASE EXHAUST DUCTWORK SYSTEM. ACCESS PANELS SHALL BE INSTALLED IN ACCORDANCE WITH THE INSULATION MANUFACTURER'S INSTALLATION INSTRUCTIONS AND SHALL BE LABELED AS FOLLOWS: "ACCESS PANEL – DO NOT OBSTRUCT".
6. ALL HORIZONTAL GREASE EXHAUST DUCTWORK SHALL BE INSTALLED WITH A MINIMUM ¼" PER FOOT SLOPE AND SHALL BE PITCHED BACK TOWARD THE HOOD.
7. UPBLAST KITCHEN EXHAUST FANS SHALL BE LOCATED A MINIMUM OF 6 FT. FROM ANY PARAPET WALL OR ADJACENT STRUCTURE AND SHALL TERMINATE A MINIMUM OF 40 INCHES ABOVE THE FINISHED ROOFING MATERIAL.

REFRIGERANT PIPING:
1. ALL REFRIGERATION WORK SHALL BE PERFORMED BY A CERTIFIED REFRIGERATION CONTRACTOR.
2. ALL REFRIGERANT PIPING SHALL BE SEAMLESS COPPER TUBING OF TYPE L IN ACCORDANCE WITH ASTM B 88 AND ALL JOINTS SHALL BE SOLDERED.
3. ALL REFRIGERANT SUCTION LINES SHALL BE INSULATED WITH A MINIMUM 1" FOAM PIPE INSULATION. PIPE INSULATION INSTALLED OUTDOORS SHALL BE PROTECTED WITH AN APPROVED WEATHERPROOFING MATERIAL.
4. ALL SUSPENDED REFRIGERANT PIPING SHALL BE SUPPORTED AS FOLLOWS:

MATERIAL	MAX. HORIZ. SPACING	MAX. VERT. SPACING
COPPER TUBING ≤1¼"	6 FT.	10 FT.
COPPER TUBING ≥1½"	10 FT.	10 FT.

5. ALL REFRIGERANT PIPING SHALL BE SIZED PER EQUIPMENT MANUFACTURER'S RECOMMENDATIONS.
6. PRE–CHARGED LINESETS ARE NOT PERMITTED AS LINES WILL MOST LIKELY NEED TO BE CUT TO FIT THE APPLICATION AND REFRIGERANT WILL NEED TO BE RECLAIMED.
7. ALL PIPE INSULATION SHALL BE PROTECTED FROM DAMAGE FROM PIPE HANGERS. PROTECTION SHALL BE LIGHT GAUGE GALVANIZED STEEL OR EQUAL.
8. ALL REFRIGERANT PIPING SYSTEMS SHALL BE PRESSURE TESTED FOR LEAKS PRIOR TO START–UP. ALL LEAKS SHALL BE REMEDIED PRIOR TO BUILDING TURNOVER.
9. ALL PIPING SHALL MEET MINIMUM INSULATION THICKNESS PER THE TABLE BELOW:

PIPING	MINIMUM INSULATION THICKNESS (IN INCHES) PER NOMINAL PIPE OR TUBE SIZE				
NOMINAL PIPE SIZE	<1	1 TO 1.5	1.5 TO <4	4 TO <8	≥8
LIQUID (REFRIGERATION) (<40°F)	0.5	1.0	1.0	1.0	1.5
SUCTION (REFRIGERATION) (<40°F)	0.5	1.0	1.0	1.0	1.5

CO2 DETECTION EQUIPMENT:
1. THE CO2 DETECTOR SHALL BE HARD–WIRED TO PREVENT TAMPERING AND SHALL BE INSTALLED AT 12" A.F.F. WITHIN A 5 FT. RADIUS OF THE CO2 STORAGE TANKS.
2. ONE (1) AUDIBLE AND ONE (1) VISUAL ALARM SHALL BE INSTALLED A MINIMUM OF 7 FT. A.F.F., IN PLAIN SIGHT IN THE SAME ROOM AS THE CO2 STORAGE TANKS.
3. ONE (1) AUDIBLE AND ONE (1) VISUAL ALARM SHALL BE INSTALLED A MINIMUM OF 7 FT. A.F.F., AT THE BACK OF THE KITCHEN AND IN PLAIN SIGHT FROM THE MAIN SIDE OF THE PREP LINE.
4. THE CO2 EXTERIOR STROBE SHALL BE INSTALLED AS SHOWN ON SHEET A2.0, (DETAIL 2) AND ON SHEET E1.1. THE INSIDE AUDIBLE AND VISUAL ALARM SHALL BE INSTALLED INSIDE THE CO2 CLOSET, AND IN THE SUPPORT/BACK–OF–THE HOUSE LOCATION AS SHOWN ON SHEETS E1.1 AND E3.0.

NATURAL GAS SYSTEMS:
1. ALL GAS PIPING, WATER HEATER VENTS, INTAKES AND FLUES SHALL CONFORM TO THE CURRENT VERSION OF NFPA 54, NATIONAL FUEL GAS CODE, AND ANY LOCAL CODE REQUIREMENTS.
2. THE NATURAL GAS MAIN PIPE SIZING IS BASED ON THE FOLLOWING:
   A. MINIMUM SUPPLY PRESSURE AT THE METER OF 2 PSIG
   B. 1 PSIG PRESSURE DROP FROM METER TO FARTHEST APPLIANCE
   C. 1,000 BTU PER CU. FT. OF NATURAL GAS
3. GAS PIPING RUN–OUTS TO EQUIPMENT ARE SIZED BASED ON THE FOLLOWING:
   A. SUPPLY PRESSURE AT THE REGULATOR OF 10" W.C. (¼ PSIG)
   B. 0.5" W.C. PRESSURE DROP FROM REGULATOR TO FARTHEST APPLIANCE
   C. 1,000 BTU PER CU. FT. OF NATURAL GAS
4. ALL NATURAL GAS PIPE SHALL BE SCHEDULE 40 CARBON STEEL PIPE WITH MALLEABLE IRON FITTINGS AND SHALL BE COMPLY TO ONE OF THE FOLLOWING STANDARDS: ASME B36.10, 10M; ASTM A 53; OR ASTM A 106.
5. NATURAL GAS PRESSURE REGULATORS SHALL BE MAXITROL 325 SERIES OR EQUAL.
6. ALL SUSPENDED STEEL PIPING SHALL BE SUPPORTED AS FOLLOWS:

SIZE	MAX. HORIZ. SPACING	MAX. VERT. SPACING
½"	6 FT.	6 FT.
¾" TO 1"	8 FT.	8 FT.
≥1¼"	10 FT.	10 FT.

7. GAS PIPING SHALL NOT PENETRATE ANY FIRE–RATED CHASE OR SHAFT, DUCTWORK OR PLENUM.
8. ALL NATURAL GAS PIPING INSTALLED OUTDOORS SHALL BE COATED WITH A CORROSION RESISTANT PAINT. PAINT COLOR SHALL BE ORANGE OR YELLOW.
9. ALL INTAKE AND VENT PIPING FOR SEALED–COMBUSTION WATER HEATERS SHALL BE PVC OR ABS, SHALL BE SIZED AND INSTALLED IN ACCORDANCE WITH THE MANUFACTURER'S INSTRUCTIONS AND SHALL BE INSTALLED BY THE PLUMBING CONTRACTOR.
10. ALL WATER HEATER VENTS SHALL BE LOCATED A MINIMUM OF 10 FT. HORIZONTALLY FROM ANY OUTDOOR AIR INTAKE. WHERE A WATER HEATER VENT IS LOCATED WITHIN 10 FT. OF AN INTAKE, THE FLUE OR VENT SHALL TERMINATE A MINIMUM OF 2 FT. ABOVE THE INTAKE.
11. UPON COMPLETION OF INSTALLATION, THE GAS PIPING SYSTEM SHALL BE PURGED OF DELETERIOUS MATERIAL AND SHALL BE PRESSURE TESTED. PRESSURE TESTING SHALL BE PERFORMED WITH THE EQUIPMENT SHUT–OFF VALVES IN THE CLOSED POSITION TO PROTECT EQUIPMENT FROM DAMAGE DUE TO EXCESSIVE PRESSURE.
12. AFTER THE PRESSURE TEST HAS BEEN COMPLETED AND ANY LEAKS REMEDIED, THE INSTALLING CONTRACTOR SHALL MEASURE AND VERIFY THE FOLLOWING GAS PRESSURES WHILE EQUIPMENT IS IN OPERATION:
   A. GRILL – 6" W.C. NATURAL, 14" W.C. L.P.
   B. FRYER – 6" W.C. NATURAL, 14" W.C. L.P.
   C. WATER HEATER – 6" W.C. NATURAL, 14" W.C. L.P.
   D. HVAC UNIT – 7" W.C. NATURAL, 14" W.C. L.P.
13. IF THE MINIMUM PRESSURES ARE NOT MET, THIS SHALL BE IMMEDIATELY REPORTED TO THE McDONALD'S AREA CONSTRUCTION MANAGER.
14. UNDERGROUND GAS PIPING SHALL BE INSTALLED AT A MINIMUM DEPTH OF 12 INCHES BELOW GRADE. COORDINATE WITH LOCAL BUILDING CODE FROST LINE DEPTH REQUIREMENTS.
15. GAS SHUTOFF VALVES SHALL BE OF AN APPROVED TYPE. REFER TO MANUAL GAS VALVE STANDARDS TABLE FOR APPLICATION SPECIFIC REQUIREMENTS.

VALUE STANDARDS	APPLIANCE SHUTOFF VALVE APPLICATION UP TO ½ PSIG PRESSURE	OTHER VALVE APPLICATIONS	
		UP TO ½ PSIG PRESSURE	UP TO 2 PSIG PRESSURE
ANSI Z21.15 / CGA 9.1	X	–	–
ASME B16.44	X	X	X[A]
ASME B16.33	X	X	X
A. IF LABELED 2G.			

4

CONDENSATE PIPING:
1. CONDENSATE PIPING SHALL BE GALVANIZED STEEL, COPPER OR PVC.
2. PVC PIPE SHALL BE PAINTED WITH WATER BASED LATEX PAINTING TO RESIST DEGRADATION FROM ULTRAVIOLET EXPOSURE.
3. PIPE SUPPORTS SHALL BE RPS MODEL PMP–2 OR EQUAL. QUANTITY AS REQUIRED DEPENDANT UPON PIPING MATERIAL.
4. PIPING SHALL BE SUPPORTED AS FOLLOWS:

MATERIAL	MAX. HORIZ. SPACING	MAX. VERT. SPACING
COPPER PIPE	12 FT.	10 FT.
GALVANIZED STEEL	12 FT.	15 FT.
PVC	4 FT.	15 FT.

5. CONDENSATE PIPING SHALL SLOPE A MINIMUM OF ⅛" PER FOOT.
6. CONDENSATE PIPING SHALL BE SIZED BASED ON THE FOLLOWING:

TOTAL TONS SERVED BY PIPE	MINIMUM PIPE SIZE
<20 TONS	¾"
>20 TONS, <40 TONS	1"
>40 TONS, <125 TONS	1½"

MECHANICAL & PLUMBING COMMISSIONING
1. MECHANICAL & PLUMBING ENGINEER OF RECORD: REVIEW IECC CHAPTER 4, SECTION C408.2 FOR MECHANICAL SYSTEMS AND SERVICE WATER–HEATING SYSTEM COMMISSIONING AND COMPLETION REQUIREMENTS. PROJECTS EXCEEDING THE HEATING AND COOLING CAPACITY THRESHOLDS IN SECTION C408.2 SHALL PROVIDE DOCUMENTATION OF A COMPLETED COMMISSIONING PLAN PREPARED BY A REGISTERED DESIGN PROFESSIONAL OR APPROVED AGENCY. ALL REQUIRED COMMISSIONING DOCUMENTATION SHALL BE PROVIDED TO THE OWNER AND MADE AVAILABLE TO THE AHJ UPON REQUEST.

4

LEGEND

TS	TEMPERATURE SENSOR
ATS	AVERAGING TEMPERATURE SENSOR
CO2	CO2 SENSOR FOR ROOFTOP UNIT DEMAND CONTROL VENTILATION
HS	HUMIDITY SENSOR
T	THERMOSTAT
S	SMOKE DETECTOR
KH 2	EQUIPMENT TAG
R–1 / 1750 CFM / 18"ø	DIFFUSER INFORMATION LINE 1: TAG LINE 2: AIRFLOW LINE 3: NECK SIZE
	SUPPLY AIR DUCT (VERTICAL)
	RETURN OR EXHAUST AIR DUCT (VERTICAL)
	ROUND DUCT (VERTICAL)
SSC	STEADY–STATE SPEED CONTROLLER
	PLAQUE DIFFUSER (SHADED AREA DESIGNATES BLANK–OFF PANEL LOCATION)
	LINEAR SLOT DIFFUSER
	LOUVERED FACE DIFFUSER
	CEILING–MOUNTED EXHAUST FAN
	SPIN–IN COLLAR WITH VOLUME DAMPER
	VOLUME DAMPER
	FLEXIBLE DUCTWORK
12"ø	SHEET METAL DUCTWORK W/DIA. SIZE
	PERFORATED FACE DIFFUSER
	SHEET METAL TEE WITH CAP

ABBREVIATIONS

ACM	AREA CONSTRUCTION MANAGER
B.J.	BELOW JOISTS
BSI	BEVERAGE SYSTEM INSTALLER
DCV	DEMAND CONTROL VENTILATION
E.A.	EXHAUST AIR
EC	ELECTRICAL CONTRACTOR
FAC	FIRE ALARM CONTRACTOR
FOB	FLAT ON BOTTOM
FOT	FLAT ON TOP
FPC	FIRE PROTECTION CONTRACTOR
GC	GENERAL CONTRACTOR
I.D.	INSIDE DIMENSION
KEI	KITCHEN EQUIPMENT INSTALLER
KES	KITCHEN EQUIPMENT SUPPLIER
M.A. (S)	MIXED AIR – SUMMER
M.A. (W)	MIXED AIR – WINTER
MC	MECHANICAL CONTRACTOR
O.A.	OUTDOOR AIR
O.D.	OUTSIDE DIMENSION
O/O	OWNER/OPERATOR
PC	PLUMBING CONTRACTOR
R.A.	RETURN AIR
RC	REFRIGERATION CONTRACTOR
S.A.	SUPPLY AIR
S.P.	STATIC PRESSURE
MC	TEST AND BALANCE CONTRACTOR

LINGLE DESIGN GROUP INC
158 WEST MAIN STREET
LENA, IL 61048
815.369.9155
1764 BLAKE ST
DENVER, CO 8020
303.974.5873
WWW.LINGLEDESIGN.COM

WCW Engineers, Inc.
760 Creel Drive
Wood Dale, Illinois 60191
Tel 630/595-8800
Fax 630/595-8818
www.WCWengineers.com

© ALL DRAWINGS AND WRITTEN MATERIAL CONTAINED HEREIN ARE THE PROPERTY OF THE LINGLE DESIGN GROUP, INC. THEY MAY NOT BE REVISED, COPIED, REUSED, OR DISCLOSED IN ANY MANNER WITHOUT WRITTEN AUTHORIZATION FROM THE ARCHITECT.

LICENSE EXPIRATION: APR 30, 2027

JEFF A. KLINKERT LICENSED PE31503 KANSAS PROFESSIONAL ENGINEER

DATE ISSUED: AUG 2, 2026

STAMPED: 150405
PROJECT #: 25-079
NATIONAL #: 44936
DRAWN BY: SC
CHECKED BY: JK

DATE: 10/15/25 - PERMIT / BID SET

REVISIONS
1. 11/12/25 - QC COMMENTS/PROTO UPDATE
2. 02/12/26 - CITY COMMENTS
3. 03/10/26 - DECOR UPDATE
4. 08/02/26 - OWNER COMMENTS / PROTOTYPE UPDATES

CLIENT
McDonald's USA, LLC

PROTOTYPE
BB20 4590 MS-HB
ISSUE DATE 08/27/25

ADDRESS
2320 METROPOLITAN AVE
KANSAS CITY, KS 66106

SHEET TITLE
GENERAL NOTES

SHEET NUMBER:
M4.0

COORDINATION SCHEDULE

GENERAL REQUIREMENTS	FURNISH	INSTALL	FINAL CONNECTION	NOTES
MECHANICAL PERMIT	MC			1–3
HOT WORK (WELDING) PERMIT (IF APPLICABLE)	KES			1–3
REFRIGERATION PERMIT (IF APPLICABLE)	MC			1–3
PLUMBING PERMIT	PC			1–3
ELECTRICAL PERMIT	EC			1–3
FIRE SPRINKLER PERMIT (IF APPLICABLE)	FPC			1–3
FIRE ALARM PERMIT (IF APPLICABLE)	FAC			1–3
CONTRACTOR COORDINATION REQUIREMENTS				
HEATING & AIR–CONDITIONING				
ROOFTOP UNITS, INTAKE AND RELIEF	MCD CP	MC		1–5, 17, 22
ROOF CURBS	MCD CP	MC		1–3, 20, 22
GAS PIPING AND GAS PIPE KIT	PC	PC	PC	1–3, 14, 22–23
CONTROLS WIRING	MC	EC	EC	1–3, 19, 22, 24
POWER WIRING	EC	EC	EC	1–3, 19, 22, 24
CONDENSATE TRAP	MC	PC		1–3, 22–23
CONDENSATE PIPING (IF APPLICABLE)	PC	PC		1–3, 22–23
DUCT–MOUNTED SMOKE DETECTOR	MC	MC	EC	1–3, 22, 24
GENERAL EXHAUST SYSTEMS				
EXHAUST FANS	MCD CP	MC		1–3, 17, 22
ROOF CURBS	MCD CP	MC		1–3, 22
CONTROLS (WHERE APPLICABLE)	MC	EC	EC	1–3, 22, 24
POWER WIRING	EC	EC	EC	1–3, 22, 24
TEMPERATURE CONTROLS				
BUILDING AUTOMATION SYSTEM	MCD CP	MC	EC	1–3, 22, 24
REMOTE SENSORS (RH AND/OR TEMPERATURE)	MC	MC	EC	1–3, 22, 24
CONTROLS WIRING (WHERE APPLICABLE)	MC	EC	EC	1–3, 22, 24
POWER WIRING	EC	EC	EC	1–3, 22, 24
DUCTWORK AND ACCESSORIES				
GALVANIZED SHEET METAL DUCTWORK	MC	MC		1–3, 22
EXTERNAL INSULATION	MC	MC		1–3, 22
INTERNAL INSULATION (IF APPLICABLE)	MC	MC		1–3, 22
WEATHERPROOFING (IF APPLICABLE)	MC	MC		1–3, 22
SPIN–IN COLLARS	MC	MC		1–3, 22
FLEXIBLE DUCTWORK	MC	MC		1–3, 22
VOLUME/BALANCING DAMPERS	MC	MC		1–3, 22
FIRE DAMPERS (IF APPLICABLE)	MC	MC		1–3, 22
FIRESTOPPING (IF APPLICABLE)	MC	MC		1–3, 22
AIR DEVICES AND ACCESSORIES	MC	MC	MC	1–3, 7, 22, 28
PLUMBING SYSTEMS				
WATER HEATERS	MCD CP	PC	PC	1–3, 11–12, 23
HOT AND COLD WATER PIPE	PC	PC	PC	1–3, 23
VENTS AND INTAKES	PC	PC	PC	1–3, 23
THERMOSTATIC MIXING VALVE	PC	PC	PC	1–3, 23
POWER AND CONTROL WIRING	EC	EC	EC	1–3, 23–24
KITCHEN EXHAUST SYSTEMS				
McDONALD'S BACKSHELF EXHAUST HOODS	KES	KEI		1–3, 6, 22, 27
CANOPY EXHAUST HOODS (IF APPLICABLE)	KES	KEI		1–3, 6, 22, 27
BLACK IRON DUCTWORK	KES	KEI		1–3, 6, 22
STAINLESS STEEL DUCTWORK (IF APPLICABLE)	KES	KEI		1–3, 6, 22
ALUMINUM DUCTWORK (IF APPLICABLE)	KES	KEI		1–3, 6, 22
UL LISTED DUCT WRAP	MC	MC		1–3, 6, 22
FIRE–RATED DUCT ENCLOSURE (IF APPLICABLE)	GC	GC		1–3, 6, 20, 22
EXHAUST FANS	MCD CP	MC		1–3, 6, 17, 22
ROOF CURBS	MCD CP	MC		1–3, 6, 20, 22
CURB EXTENSIONS	MC	MC		1–3, 6, 22
CONTROLS (WHERE APPLICABLE)	EC	EC	EC	1–3, 6, 22, 24
POWER WIRING	EC	EC	EC	1–3, 6, 22, 24
FIRE SUPPRESSION SYSTEM	KES	KES	KES	1–3, 16, 22, 27
KITCHEN EQUIPMENT				
COOLER/FREEZER	KES	GC		1–3, 27
EVAPORATOR COILS	KES	MC		1–3, 27
CONDENSATE PIPING	PC	PC	PC	1–3, 23, 27
REMOTE CONDENSING UNIT (MAC)	KES	MC		1–3, 22, 27
ROOF CURBS	MC	MC		1–3, 22
REFRIGERANT PIPING	KES	MC	MC	1–3, 22, 27
POWER WIRING	EC	EC	EC	1–3, 22, 24, 27
CONTROL WIRING	EC	EC	EC	1–3, 24, 27
PIPE PORTALS	MC	MC		1–3, 22
ICE MACHINES	KES	KEI		1–3, 27
WATER SUPPLY PIPING	KES	KEI	BSI	1–3, 27
REMOTE CONDENSING UNITS	KES	MC		1–3, 22, 27
ROOF CURBS	MC	MC		1–3, 22, 27
REFRIGERANT PIPING	KES	MC	MC	1–3, 22, 27
POWER WIRING	EC	EC	EC	1–3, 22, 24, 27
CONTROL WIRING	KES	EC	EC	1–3, 24, 27
PIPE PORTALS	MC	MC		1–3, 22
GRILLS	KES	KES		1–3, 27
GAS PIPING (IF APPLICABLE)	PC	PC	PC	1–3, 23, 27
POWER WIRING	EC	EC	EC	1–3, 24, 27
CONTROL CABLE (6' CLAMSHELL ONLY)	MC	EC	EC	1–3, 23, 24, 27
FRYERS	KES	KES		1–3, 27
GAS PIPING (IF APPLICABLE)	PC	PC	PC	1–3, 23, 27
POWER WIRING	EC	EC	EC	1–3, 24, 27
3–COMPARTMENT SINK	KES	KES		1–3, 12, 27
FAUCETS AND PRE–RINSE SPRAYER	KES	KES		1–3, 27
WATER SUPPLY PIPING	PC	PC	PC	1–3, 23, 27
SANITARY DRAIN PIPING	PC	PC	PC	1–3, 23, 27
HAND SINKS	MCD CP	PC		1–3, 23, 27
FAUCET	MCD CP	PC		1–3, 23, 27
WATER SUPPLY PIPING	PC	PC	PC	1–3, 23, 27
SANITARY DRAIN PIPING	PC	PC	PC	1–3, 23, 27
VEGETABLE SINK	KES	KES		1–3, 23, 27
FAUCET	KES	KES		1–3, 23, 27
WATER SUPPLY PIPING	PC	PC	PC	1–3, 23, 27
SANITARY DRAIN PIPING	PC	PC	PC	1–3, 23, 27
WASHING MACHINE	KES	KES		1–3, 23, 27
WATER SUPPLY PIPING	PC	PC	PC	1–3, 23, 27
SANITARY DRAIN PIPING	PC	PC	PC	1–3, 23, 27
WARE WASHER	KES	KES		1–3, 23, 27
WATER SUPPLY PIPING	PC	PC	PC	1–3, 23, 27
SANITARY DRAIN PIPING	PC	PC	PC	1–3, 23, 27
MISCELLANEOUS ITEMS				
FIRE SPINKLER SYSTEMS	FPC	FPC	FPC	1–3, 15, 25
HVAC EQUIPMENT START–UP	MC			1–3, 22
TEST, ADJUST AND BALANCE HVAC SYSTEMS	TAB			1–3, 22
DOOR GRILLES (IF APPLICABLE)	MC	GC		1–3, 20, 22
ROOF/WALL OPENINGS	GC			1–3, 20–24
APPLIANCE BACKFLOW PREVENTION	KES/BSI	PC	PC	1–3, 23, 27
CO2 DETECTION SYSTEM	KES/BSI	EC/BSI	EC/BSI	1–3, 22, 27

NOTES:
1. THIS SCHEDULE IS INTENDED AS A GUIDE FOR THE WORK TO BE PERFORMED. ALL WORK SHALL BE COORDINATED BETWEEN THE McDONALD'S AREA CONSTRUCTION MANAGER AND ALL GC AND O/O SUBCONTRACTORS.
2. ONE (1) COPY OF THE DECOR PACKAGE DRAWINGS SHALL BE SUPPLIED TO THE GENERAL CONTRACTOR AND EACH OF THE SUBCONTRACTORS. IT SHALL BE THE RESPONSIBILITY OF THE GENERAL CONTRACTOR AND THE SUBCONTRACTORS TO INSURE THAT THEY HAVE RECEIVED THE DECOR PACKAGE DRAWINGS.
3. FOR ANY WORK NOT CLARIFIED IN THIS SCHEDULE OR IN THE NOTES AND SPECIFICATIONS, PLEASE CONSULT THE McDONALD'S CONSTRUCTION MANAGER FOR SCOPE OF WORK.
4. ALL ROOFTOP UNIT EQUIPMENT SUPPLIED BY THE MECHANICAL CONTRACTOR AND THE KITCHEN EQUIPMENT SUPPLIER SHALL BE ON SITE AT THE SAME TIME FOR A SINGLE CRANE LIFT. EQUIPMENT SITE ARRIVAL DATE SHALL BE COORDINATED BETWEEN THE CONSTRUCTION MANAGER, MECHANICAL CONTRACTOR AND KITCHEN EQUIPMENT SUPPLIER.
5. ALL ROOFTOP UNITS INSTALLED IN McDONALD'S RESTAURANTS SHALL BE HIGH EFFICIENCY EQUIPMENT. THE INSTALLATION OF STANDARD EFFICIENCY ROOFTOP UNITS IS PROHIBITED.
6. ALL KITCHEN EQUIPMENT REQUIRING EXHAUST SHALL BE INSTALLED IN ACCORDANCE WITH THESE PLANS. ANY VARIATION FROM THESE PLANS SHALL BE REPORTED TO THE CONSTRUCTION MANAGER AND THE ENGINEER–OF–RECORD.
7. WHERE GYPSUM BOARD CEILINGS ARE INSTALLED, THE MECHANICAL CONTRACTOR SHALL SUPPLY DRYWALL MOUNTING FRAMES FOR LAY–IN TYPE DIFFUSERS.
8. ALL WORK SHOWN ON P1.6 DRAWING(S) SHALL BE COMPLETED BY THE BEVERAGE SYSTEM INSTALLER (OR K.E.S.) UNLESS OTHERWISE NOTED IN THE PLUMBING DRAWINGS.
9. ALL WORK ON P1.0 & P1.2 DRAWING(S) SHALL BE BY THE PLUMBING CONTRACTOR.
10. THE BEVERAGE SYSTEM INSTALLER FURNISHES, RUNS AND CONNECTS ALL FLEXIBLE WATER AND SYRUP LINES FOR ALL AFFECTED EQUIPMENT INCLUDING THE FOLLOWING:
    A. HOT CHOCOLATE
    B. COFFEE BREWER
    C. ICE MACHINE
    D. O.J.
    E. SODA TOWERS
11. ALL WATER HEATERS INSTALLED IN McDONALD'S RESTAURANTS SHALL BE HIGH EFFICIENCY SEALED–COMBUSTION WATER HEATERS. THE INSTALLATION OF STANDARD EFFICIENCY GRAVITY–VENTED WATER HEATERS IS PROHIBITED.
12. THE CONSTRUCTION MANAGER, PLUMBING CONTRACTOR AND KITCHEN EQUIPMENT SUPPLIER SHALL COORDINATE WHICH SOILED DISHWASHER (3–COMPARTMENT SINK) IS BEING INSTALLED IN THE RESTAURANT.
13. ALL GAS PIPING FOR COOKING EQUIPMENT SHALL TERMINATE IN THE CEILING PRIOR TO THE INSTALLATION OF THE PIPING CHASE. UPON INSTALLATION OF THE CHASE, THE GAS PIPING SHALL THEN BE CONTINUED IN THE CHASE FOR FINAL CONNECTION TO THE APPLIANCE.
14. ALL GAS PIPING FOR ROOFTOP EQUIPMENT SHALL BE BROUGHT UP THROUGH THE BASE OF THE UNIT TO MINIMIZE ROOF PENETRATIONS. WHERE THIS IS NOT POSSIBLE, THE PLUMBING CONTRACTOR SHALL PROVIDE THE NECESSARY PIPE PORTALS ON ROOF.
15. ALL FIRE PROTECTION DRAWINGS CONTAINED WITHIN THIS SET ARE STRICTLY FOR REFERENCE ONLY. FIRE SPRINKLER DRAWINGS SHALL BE DESIGNED AND PERMITTED BY A FIRE PROTECTION CONTRACTOR.
16. ALL R–102 WET CHEMICAL FIRE SUPPRESSION SYSTEMS FOR TYPE I HOODS SHALL BE DESIGNED AND INSTALLED BY A LOCAL ANSUL AGENT. THE USE OF DRY CHEMICAL SYSTEMS IS PROHIBITED. THE LOCAL ANSUL AGENT CONTRACT IS HANDLED THROUGH THE KITCHEN EQUIPMENT SUPPLIER.
17. ALL ROOFTOP UNITS AND EXHAUST FANS ARE SUPPLIED WITH A FACTORY–INSTALLED DISCONNECT SWITCH.
18. ELECTRICAL CONTRACTOR SHALL PROVIDE DISCONNECT SWITCHES FOR REMOTE CONDENSING UNITS.
19. ALL ELECTRICAL CONDUITS FOR ROOFTOP EQUIPMENT SHALL BE BROUGHT UP THROUGH THE BASE OF THE UNIT TO MINIMIZE ROOF PENETRATIONS. WHERE THIS IS NOT POSSIBLE, THE ELECTRICAL CONTRACTOR SHALL PROVIDE THE NECESSARY PIPE PORTALS ON ROOF.
20. SEE ARCHITECTURAL DRAWINGS FOR ADDITIONAL INFORMATION.
21. SEE STRUCTURAL DRAWINGS FOR ADDITIONAL INFORMATION.
22. SEE MECHANICAL DRAWINGS FOR ADDITIONAL INFORMATION.
23. SEE PLUMBING DRAWINGS FOR ADDITIONAL INFORMATION.
24. SEE ELECTRICAL DRAWINGS FOR ADDITIONAL INFORMATION.
25. SEE FIRE PROTECTION DRAWINGS FOR ADDITIONAL INFORMATION.
26. SEE FIRE ALARM DRAWINGS FOR ADDITIONAL INFORMATION.
27. SEE KITCHEN DRAWINGS FOR ADDITIONAL INFORMATION.
28. SEE DECOR DRAWINGS FOR ADDITIONAL INFORMATION.

AIR DEVICE SCHEDULE

TAG	MANUFACTURER	MODEL	BORDER	SIZE	COLOR	ACCESSORIES	NOTES
S–1A	CAPTIVEAIRE	DI–PSP	LAY–IN	24x24	SILVER	7	1,2
S–1B	CAPTIVEAIRE	DI–FUSE					
S–2	TITUS	OMNI	LAY–IN	24x24	VARIES	4,6,7	1,6,7
	PRICE	SPD					
S–3	TITUS	OMNI	LAY–IN	12x12	VARIES	1,2,7	1,3,6
	PRICE	SPD					
S–4	TITUS	TBDI–80	LAY–IN	48" (2) 1½" SLOTS	VARIES	7	1,5,6
	PRICE	TBDI4					
S–5	TITUS	TBDI–80	LAY–IN	48" (1) ¾" SLOT	VARIES	7	1,5,6
	PRICE	TBDI4					
R–1	TITUS	23RL	LAY–IN	24x24	VARIES	3,7	1,6
	PRICE	60L					
R–2	TITUS	23RL	SURFACE MOUNT	4x12	WHITE	–	–
	PRICE	60L					
E–1	TITUS	23RL	LAY–IN	12x12	WHITE	1,7	1
	PRICE	60L					

ACCESSORIES:
1. COMBINATION DAMPER AND EQUALIZING GRID
2. PLASTER FRAME FOR DRYWALL CEILING INSTALLATION
3. SQUARE–TO–ROUND COLLAR CONNECTION
4. BACKPAN INSULATION
5. (NOT USED)
6. BLANK–OFF PANEL AS SHOWN ON DUCTWORK PLAN
7. PLASTER FRAME MAY BE NECESSARY – COORDINATE WITH DECOR DRAWINGS

NOTES:
1. SEE PLAN FOR NECK SIZES
2. CONTACT CAPTIVEAIRE FOR ORDERING: BARRETT.LAW@CAPTIVEAIRE.COM, 208.989.6947.
3. PROVIDE 1" FIBERGLASS INSULATION FOR DIFFUSER BACKPAN
4. NOT USED
5. GENERAL CONTRACTOR SHALL PROVIDE ADDITIONAL 4 FT. T–BAR FOR DIFFUSER FRAMING
6. AIR DEVICE FINISH WILL VARY:
   * KITCHEN, STORAGE, RESTROOMS – WHITE
   * DINING ROOM, VESTIBULES – WHITE, BLACK OR PAINTABLE/PRIME COAT (COORDINATE FINAL COLOR WITH DECOR PLANS).
7. ADDITIONAL ACCESSORIES AND/OR ALTERNATE DIFFUSERS MAY BE REQUIRED. REFER TO DECOR DRAWINGS TO VERIFY.

AIR CURTAIN SCHEDULE

TAG	MANUFACTURER	MODEL	SERVES	AIRFLOW	ELEC	ACCESS.	NOTES
AC 1	POWERED AIRE	MP–1–30E	CASH BOOTH	VARIABLE	8.0 KW HEATER; ⅛ HP FAN	2,3,5	1,2
AC 2	POWERED AIRE	MP–1–30E	PRESENTER'S BOOTH	VARIABLE	8.0 KW HEATER; ⅛ HP FAN	2,3,5	1,2
AC 3	POWERED AIRE	RBT 1–48	STORAGE ENTRANCE	2,559 CFM	MCA: 10 MOCP: 20 ¾ HP	1–4	1,2
AC 4	POWERED AIRE	RBT 1–36	REAR ENTRANCE	2,541 CFM	MCA: 10 MOCP: 20 ¾ HP	1–4	1,2
AC 5	POWERED AIRE	MP 1–30	FORWARD PRESENTER'S BOOTH	VARIABLE	MCA: 5.5 MOCP: 10 ½ HP	2–4	1,2

ACCESSORIES:
1. NSF LISTING
2. DOOR SWITCH
3. DELAY TIMER
4. 120V/1ø/60Hz
5. 208V/1ø/60Hz

NOTES:
1. SET DELAY TIMER TO 30 SECONDS
2. MAINTAIN 7" CLEARANCE FOR MOTOR ACCESS ON SIDE OF AIR CURTAIN.

CONTROLS

SYMBOL	DESCRIPTION	MANUFACTURER	MODEL
T	24V THERMOSTAT (ROOFTOP UNITS)	–	–
	120V THERMOSTAT (COMPUTER CLOSET)	HONEYWELL	T651A3018
TS	REMOTE TEMPERATURE SENSOR	–	–
ATS	REMOTE AVERAGING TEMPERATURE SENSOR	–	–
HS	REMOTE HUMIDITY SENSOR	–	–
	BULK CO2 DETECTION SYSTEM	LOGIC02	–

NOTES:
1. FOR TSTAT, TS, HS AND ATS INFORMATION, REFER TO E4.1
2. TO ORDER HONEYWELL EQUIPMENT CALL (800)575–4841
3. SEE KITCHEN DRAWINGS FOR BULK CO2 DETECTION LOCATIONS

KITCHEN HOOD SCHEDULE

TAG	SERVED BY	MANUFACTURER	MODEL	NOTES	AIRFLOW CFM	AIRFLOW CFM/LF	FILTERS QTY/SIZE	FILTERS FPM
KH 1	EXHAUST FAN (EF–1)	FRANKE H&K	UH–83	1–4	1000	166	(4)10x26	250
KH 2	EXHAUST FAN (EF–2)	FRANKE H&K	UH–50	1–4	575	173	(3)10x16	255
KH 3	EXHAUST FAN (EF–3)	FRANKE H&K	UH–65	1–4	800	166	(4)10x16	260
KH 4	EXHAUST FAN (EF–6)	FRANKE H&K	TYPE II	1–2, 5	600	150	–	–

NOTES:
1. HOODS SHALL BE PROVIDED BY THE KES (SEE COORDINATION SCHEDULE)
2. SEE HOOD DRAWINGS FOR CONSTRUCTION DETAILS AND UL INFORMATION
3. REFER TO E3.2 FOR HOOD/FAN INTERLOCK DETAILS
4. CAPTURE JET PLENUMS TO BE INSTALLED ON HOOD, REFER TO K2.1 KITCHEN SCHEDULE.
5. PROVIDE WITH FASCIA KIT. COORDINATE CONDENSATE DRAINAGE WITH P.C.

FAN SCHEDULE

TAG	MANUFACTURER	MODEL	SERVES	ACCESSORIES	NOTES	DESIGN CFM	DESIGN S.P.	DESIGN BHP	DESIGN FRPM	ELECTRICAL VOLTS	ELECTRICAL Ø	ELECTRICAL Hz	ELECTRICAL HP	ELECTRICAL FLA AMPS
EF 1	ACCUREX	XCUE–14010VG124MCD	KITCHEN HOOD (KH–1)	1–5,13,14	1,2,6	1000	1.75 (4)	0.61	1725	115 TO 10VDC ECM	1	60	1	11.5
EF 2	ACCUREX	XCUE–14010VG124MCD	KITCHEN HOOD (KH–2)	1–5,14	1,2,6	575	1.75	0.19	1725	115 TO 10VDC ECM	1	60	1	11.5
EF 3	ACCUREX	XCUE–14010VG124MCD	KITCHEN HOOD (KH–3)	1–5,13,14	1,2,6	800	1.75 (4)	0.19	1725	115 TO 10VDC ECM	1	60	1	11.5
EF 4	ACCUREX	XRED–099–VG4X–QD	DINING RESTROOMS	6–9,14	1,2,5	400	0.50	0.07	1126	115 TO 10VDC ECM	1	60	¼	2.5
EF 5	GREENHECK	SP–AP0511WL	DINING ROOM JANITOR'S CLOSET	10–12	1–3,5	80	0.20	–	900	115	1	60	–	0.29
EF 6	ACCUREX	XCUE–099–VG	KITCHEN HOOD (KH–4)	6–9,14	1,2,7	600	0.75	0.19	1725	115	1	60	¼	2.9
TF 1	GREENHECK	SP–A510	COMPUTER CLOSET	9–12	1–4	375	0.25	0.11	1100	115	1	60	–	3.3

ACCESSORIES:
1. 2–POLE NEMA 3R DISCONNECT SWITCH FACTORY–WIRED AND MOUNTED TO FAN
2. UL 762 LISTED AND LABELED
3. ROOF CURB MODEL GPF–24–G30 WITH 1" INSULATION
4. CURB EXTENSION INTEGRAL TO MCD FAN PACKAGE
5. HINGED CURB CAP KIT WITH CABLES
6. 120VAC BACKDRAFT DAMPER
7. ROOF CURB MODEL GPI–19–G14 WITH 1" INSULATION AND DAMPER TRAY
8. NEMA 3R DISCONNECT SWITCH
9. EXTERNAL STEADY–STATE SPEED CONTROLLER
10. ROUND DUCT CONNECTOR
11. TWO (2) 10W COMPACT LED LAMPS
12. PRISMATIC LENS
13. WINDBAND EXTENSION ON FAN OUTLET
14. VARIGREEN 10VDC ELECTRONICALLY COMMUTATED MOTOR

NOTES:
1. NO SUBSTITUTIONS PERMITTED
2. TO ORDER ACCUREX EQUIPMENT CALL (888)325–6629 OR E–MAIL: MCD@ACCUREX.COM
3. ELECTRICAL CONTRACTOR SHALL PROVIDE DOOR SWITCH FOR LIGHT CONTROL
4. MECHANICAL CONTRACTOR SHALL FURNISH LINE VOLTAGE THERMOSTAT FOR FAN CONTROL. ELECTRICAL CONTRACTOR SHALL INSTALL THERMOSTAT.
5. CONNECT TO TIMECLOCK FOR FAN SHUT–OFF DURING UNOCCUPIED HOURS
6. REFER TO E3.2 FOR HOOD/FAN INTERLOCK DETAILS
7. UNIT SHALL BE INTERLOCKED WITH WAREWASHER SWITCHING CONTACT.

PACKAGED ROOFTOP UNIT SCHEDULE - DX/GAS

TAG	AREA SERVED	NOMINAL TONNAGE	MINIMUM OA (CFM)	SUPPLY FAN AIRFLOW (CFM)	SUPPLY FAN EXT. S.P. (IN W.C.)	SUPPLY FAN MHP	SUPPLY FAN BHP	SUPPLY FAN RPM	COOLING COIL (DX) ENTERING AIR DB °F	ENTERING AIR WB °F	LEAVING AIR DB °F	LEAVING AIR WB °F	COOLING CAPACITY (MBH) SENSIBLE	COOLING CAPACITY (MBH) TOTAL	HEAT EXCHANGER (GAS) ENTERING AIR (DB °F)	LEAVING AIR (DB °F)	TOTAL CAPACITY INPUT	TOTAL CAPACITY OUTPUT	# OF STAGES	ARI RATING SEER	ARI RATING EER	ARI RATING IEER	WEIGHT (LBS.)*	UNIT POWER CONNECTION VOLT.	PHASE	MCA	MOCP	MANUFACTURER	MODEL NO.	ACCESSORIES
RTU–1	KITCHEN	20	1,700	7,200	1.40	5.0	5.19	1,013	78.3	65.1	60.9	57.0	134.3	177.5	55	93.8	260,000	211,000	2	-	12	15.4	3,230	208	3	89	100	LENNOX	LGT240	1,3,4,7,9,10,11,12,16,17,19,20,21
RTU–2	SUPPORT	6	800	2,400	0.80	1.5	1.50	2,816	81.8	67.4	64.6	57.9	58.4	77.9	48	86.7	108,000	87,000	2	-	12.2	17.3	1,041	208	3	32	50	LENNOX	LGT072	1,3,4,7,8,9,10,11,12,16,19,20,21
RTU–3	DINING ROOM	13	1,130	5,000	1.00	3.0	2.30	815	79	65.8	63.2	57.5	84.2	127.6	55.7	92.9	260,000	211,000	2	-	12	15.4	2,655	208	3	66	80	LENNOX	LGT156	1,3,4,7,8,9,10,11,12,16,17,19,20,21

ACCESSORIES:
1. DIFF. ENTHALPY ECONOMIZER
2. MOTORIZED O.A. DAMPER
3. BAROMETRIC RELIEF
4. MERV 13 FILTER
5. POWER EXHAUST
6. CO2 SENSOR FOR DCV
7. HUMIDITY CONTROL
8. SUPPLY AIR TEMPERING
9. TEMPERATURE SENSOR
10. COMBINED TEMP/HUMIDITY SENSOR
11. DISCONNECT SWITCH
12. FIELD WIRED 120V CONVENIENCE OUTLET
13. STAINLESS STEEL HEAT EXCHANGER
14. CONDENSER COIL PROTECTIVE COATING
15. EVAPORATOR COIL PROTECTIVE COATING
16. HAIL GUARD
17. RETURN AIR SMOKE DETECTOR
18. SUPPLY AIR SMOKE DETECTOR
19. 14" ROOF CURB
20. CONDENSATE DRAIN W/ P-TRAP
21. FLOAT SWITCH KIT

* NET WEIGHT ONLY - DOES NOT INCLUDE ADDITIONAL FACTORY OR FIELD INSTALLED OPTIONS / ACCESSORIES.

NOTES:
1. NO SUBSTITUTIONS PERMITTED.
2. TO ORDER TRANE EQUIPMENT, CALL (630) 400-4285 OR EMAIL: MCDONALDS@TRANE.COM
3. FACTORY INSTALLED DISCONNECT SWITCH IS NOT AVAILABLE WHEN MOCP IS 200 AMPS OR HIGHER. VERIFY WITH MANUFACTURER'S DOCUMENTATION PRIOR TO ORDERING.
4. MECHANICAL CONTRACTOR SHALL INSTALL SECONDARY ENTHALPY SENSOR IN RETURN AIR DUCT DROP & WIRE TO UNIT PER MAUFACTURERS INSTRUCTIONS.

LINGLE DESIGN GROUP INC
158 WEST MAIN STREET
LENA, IL 61048
815.369.9155
1764 BLAKE ST
DENVER, CO 8020
303.974.5873
WWW.LINGLEDESIGN.COM

WCW Engineers, Inc.
760 Creel Drive
Wood Dale, Illinois 60191
Tel 630/595-8800
Fax 630/595-8818
www.WCWengineers.com

© ALL DRAWINGS AND WRITTEN MATERIAL CONTAINED HEREIN ARE THE PROPERTY OF THE LINGLE DESIGN GROUP, INC. THEY MAY NOT BE REVISED, COPIED, REUSED, OR DISCLOSED IN ANY MANNER WITHOUT WRITTEN AUTHORIZATION FROM THE ARCHITECT.

LICENSE EXPIRATION: APR 30, 2027

JEFF A. KLINKERT LICENSED PE31503 KANSAS PROFESSIONAL ENGINEER

DATE ISSUED: AUG 2, 2026

STATE #: 150405
NATIONAL #: 44936
PROJECT #: 25-079
DRAWN BY: SC
CHECKED BY: JK

DATE: 10/15/25 - PERMIT / BID SET

REVISIONS
1 11/12/25 - QC COMMENTS/PROTO UPDATE
2 02/12/26 - CITY COMMENTS
3 03/10/26 - DECOR UPDATE
4 08/02/26 - OWNER COMMENTS / PROTOTYPE UPDATES

CLIENT
McDonald's USA, LLC

PROTOTYPE
BB20 4590 MS-HB
ISSUE DATE 08/27/25

ADDRESS
2320 METROPOLITAN AVE
KANSAS CITY, KS 66106

SHEET TITLE
SCHEDULES

SHEET NUMBER:
M4.1

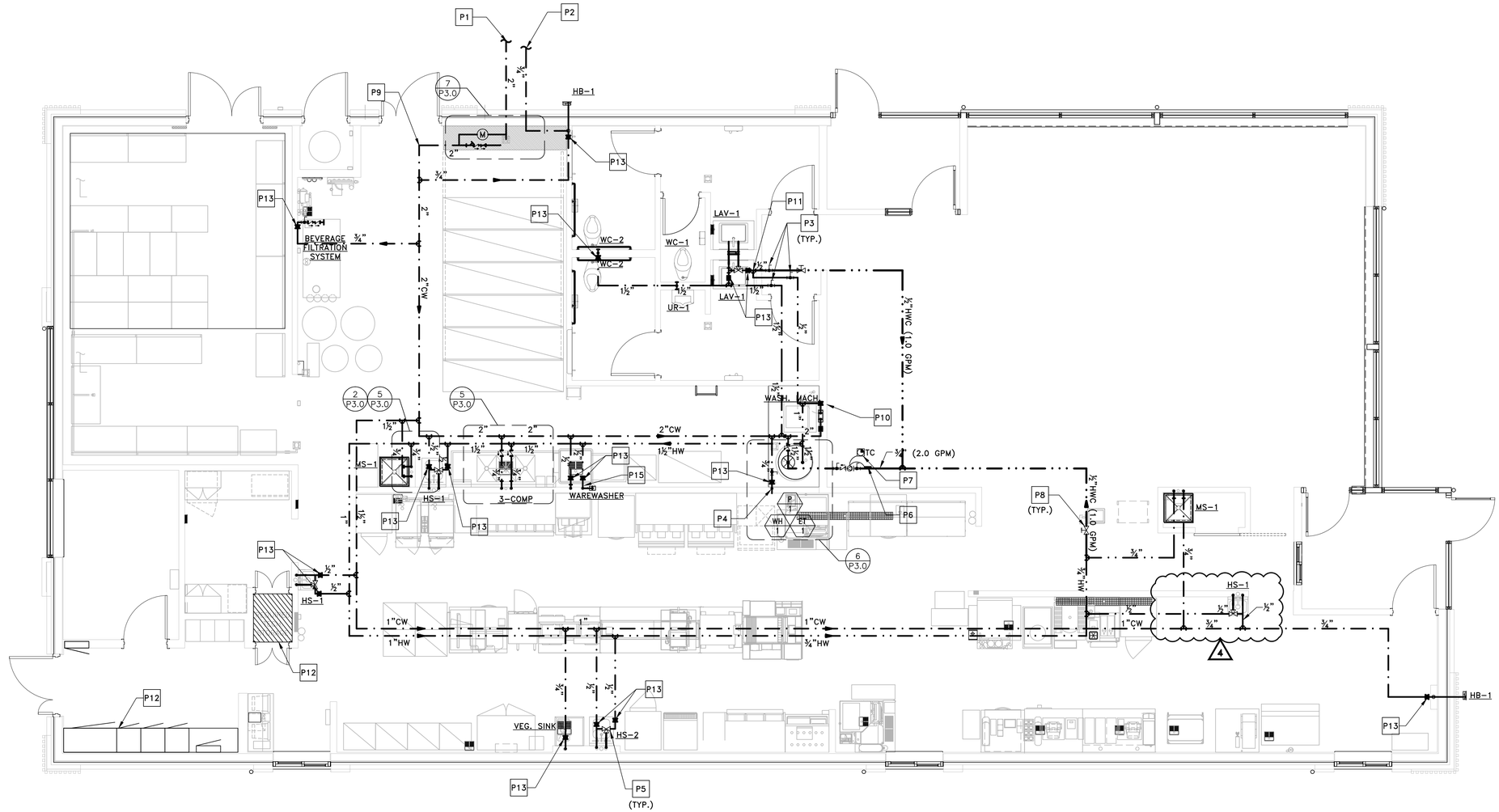

1 P1.0 **DOMESTIC WATER PIPING**

SCALE: 1/4" = 1'-0"

DRAWING NOTES

1. PIPING ROUTES AS SHOWN ARE GENERAL AND MAY VARY DUE TO FIELD CONDITIONS. COORDINATE ALL PIPE ROUTES WITH OTHER TRADES. MAKE SURE HOT WATER MAIN LOOP REMAINS WITHIN 10 FT OF FIXTURE FOR ENERGY CODE PURPOSE.
2. ALL WATER DISTRIBUTION PIPING SHALL BE INSULATED. INSULATION NOT SHOWN FOR CLARITY. SEE PLUMBING NOTES FOR INSULATION REQUIREMENTS, SHEET M4.0, "DOMESTIC SUPPLY SYSTEMS", NOTE 18.

KEYED NOTES

- P1 INCOMING UNDERGROUND WATER SERVICE (SEE SITE PLAN FOR CONTINUATION). WATER PIPING FROM THIS POINT TO CEILING PENETRATION INSIDE BUILDING SHALL BE COPPER.
- P2 COLD WATER UNDERGROUND TO YARD HYDRANT (HB-2) IN TRASH CORRAL. SEE SITE PLAN FOR CONTINUATION.
- P3 SHUT-OFF VALVE FOR RESTROOM ISOLATION. SEE VALVE SCHEDULE. ALL SHUT-OFF VALVES SHALL BE LOCATED OVER SUSPENDED CEILINGS FOR ACCESSIBILITY. DO NOT LOCATE IN AREAS WITH DRYWALL CEILINGS.
- P4 ¾" COLD WATER UP TO ROOF HYDRANT.
- P5 MIXING VALVE LOCATIONS SHOWN FOR INFORMATIONAL PURPOSES. SEE DETAIL 3 ON DRAWING P3.0 FOR MIXING VALVE INSTALLATION DETAILS.
- 4 P6 AQUASTAT INTEGRAL TO PUMP SHALL SHUT OFF PUMP WHEN RECIRULATION TEMPERATURE REACHES 140°F. SEE DETAIL 6 ON DRAWING P3.0.
- P7 TIME CLOCK TO SHUT PUMP AND WATER HEATER DOWN DURING UNOCCUPIED HOURS. SEE ELECTRICAL DRAWINGS FOR WIRING DETAIL.
- P8 BALANCING VALVE FOR RECIRCULATION SYSTEM. SEE VALVE SCHEDULE. ALL BALANCING VALVES SHALL BE LOCATED OVER SUSPENDED CEILINGS FOR ACCESSIBILITY. DO NOT LOCATE IN AREAS WITH DRYWALL CEILINGS.
- P9 WATER PIPING AFTER CEILING PENETRATION CAN TRANSITION TO CPVC OR PEX WHERE PERMITTED BY CODE.
- P10 PROPERLY SEAL ALL PIPE PENETRATIONS THROUGH DRAFT STOP WALL (TYP.)
- P11 HOT WATER RECIRCULATION SHALL CONNECT WITHIN 6" OF SUPPLY STUB OUT TO FIXTURE.
- P12 UTILITIES SHALL NOT BE ROUTED ABOVE THE TECH. CLOSET AND THE SWITCHGEAR.
- P13 INSTALL WATER-HAMMER ARRESTOR WHERE QUICK-CLOSING VALVES ARE UTILIZED. WATER-HAMMER ARRESTORS SHALL BE INSTALLED IN ACCORDANCE WITH THE MANUFACTURER'S INSTRUCTIONS. WATER-HAMMER ARRESTORS SHALL CONFORM TO ASSE 1010.
- P14 (NOT USED)
- P15 ROUTE CW AND HW DOWN IN WALL TO WALL BOX AND CONNECT COMPLETE. REFER TO PLUMBING FIXTURE SCHEDULE FOR WAREWASHER CONNECTION REQUIREMENTS.

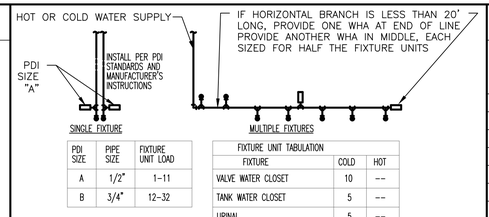

PDI SIZE	PIPE SIZE	FIXTURE UNIT LOAD
A	1/2"	1-11
B	3/4"	12-32

FIXTURE UNIT TABULATION		
FIXTURE	COLD	HOT
VALVE WATER CLOSET	10	--
TANK WATER CLOSET	5	--
URINAL	5	--
LAVATORY/SINK	1.5	1.5
JANITOR'S SINK	3	3
HOSE BIBB	2	--
SODA FACTORY	10	--
WAREWASHER	4	--

PC TO PROVIDE WATER HAMMER ARRESTERS BY SIOUX CHIEF, PRECISION PLUMBING PRODUCTS, WATTS OR APPROVED EQUIVALENT WITH PISTON AND O-RING CONSTRUCTION, HAVING PDI #WH-201, ASSE #1010 AND ANSI #A112.26.1M CERTIFICATION. INSTALL IN HORIZONTAL OR VERTICAL POSITION, BUT NEVER UPSIDE DOWN. INSTALL IN LINE WITH WATER FLOW DIRECTION IF POSSIBLE. SIZE THE UNITS AS SHOWN ON THE DRAWINGS AND/OR PER THE TABLES SHOWN ABOVE.

DETAIL 2 P1.0
WATER-HAMMER ARRESTER (TYP.)
NOT TO SCALE

FIXTURE COUNT - UPC

NO.	FIXTURE DESCRIPTION	SUPPLY CONNECTIONS WSFU	COLD	HOT	TOTAL
1	VEGETABLE PREP SINK	4	¾"	–	3
4	HAND SINK	1	½"	½"	4
4	HOSE BIBB	3	¾"	–	12
1	SODA FACTORY	10	1"	–	10
1	KITCHEN SINK (3-COMP)	4	¾"	¾"	4
2	MOP SINK	3	¾"	¾"	6
2	LAVATORY	1	½"	½"	2
1	URINAL	5	1"	–	5
3	WATER CLOSET	5	1 ½"	–	15
1	WASHING MACHINE	4	¾"	¾"	4
1	WAREWASHER	4	½"	½"	4
				TOTAL:	69

(55 GPM)

LINGLE DESIGN GRO
158 WEST MAIN S
LENA, IL 610
815.369.91
1764 BLAKE
DENVER, CO 8
303.974.58
WWW.LINGLEDESIG

WCW Engineers, Inc.
760 Creel Drive
Wood Dale, Illinois
Tel 630/595-880
Fax 630/595-881
www.WCWenginee

© ALL DRAWINGS AND WRITTEN MATERIAL CONTAINED HEREIN AR PROPERTY OF THE LINGLE DESIGN GROUP, INC. THEY MAY NOT BE RI COPIED, REUSED, OR DISCLOSED IN ANY MANNER WITHOUT WRIT AUTHORIZATION FROM THE ARCHITECT.

LICENSE EXPIRATION: APR

JEFF A. KLINKERT LICENSED PE31503 KANSAS PROFESSIONAL ENGINEER

DATE ISSUED: AUG

STATE #: 150405
PROJECT #: 25-079
NATIONAL #: 44936
DRAWN BY: SC
CHECKED BY: JK

DATE: 10/15/25 - PERMIT / BID SET

REVISIONS
1 11/12/25 - QC COMMENTS/PROTO UPI
2 02/12/26 - CITY COMMENTS
3 03/10/26 - DECOR UPDATE
4 08/02/26 - OWNER COMMENTS / PROTOTYPE UPDATES

CLIENT
McDonald's USA, LLC

PROTOTYPE
BB20 4590 MS-HB
ISSUE DATE 08/27/25

ADDRESS
2320 METROPOLITAN AVE
KANSAS CITY, KS 66106

SHEET TITLE
DOMESTIC WATER PIPING

SHEET NUMBER:
P1.0

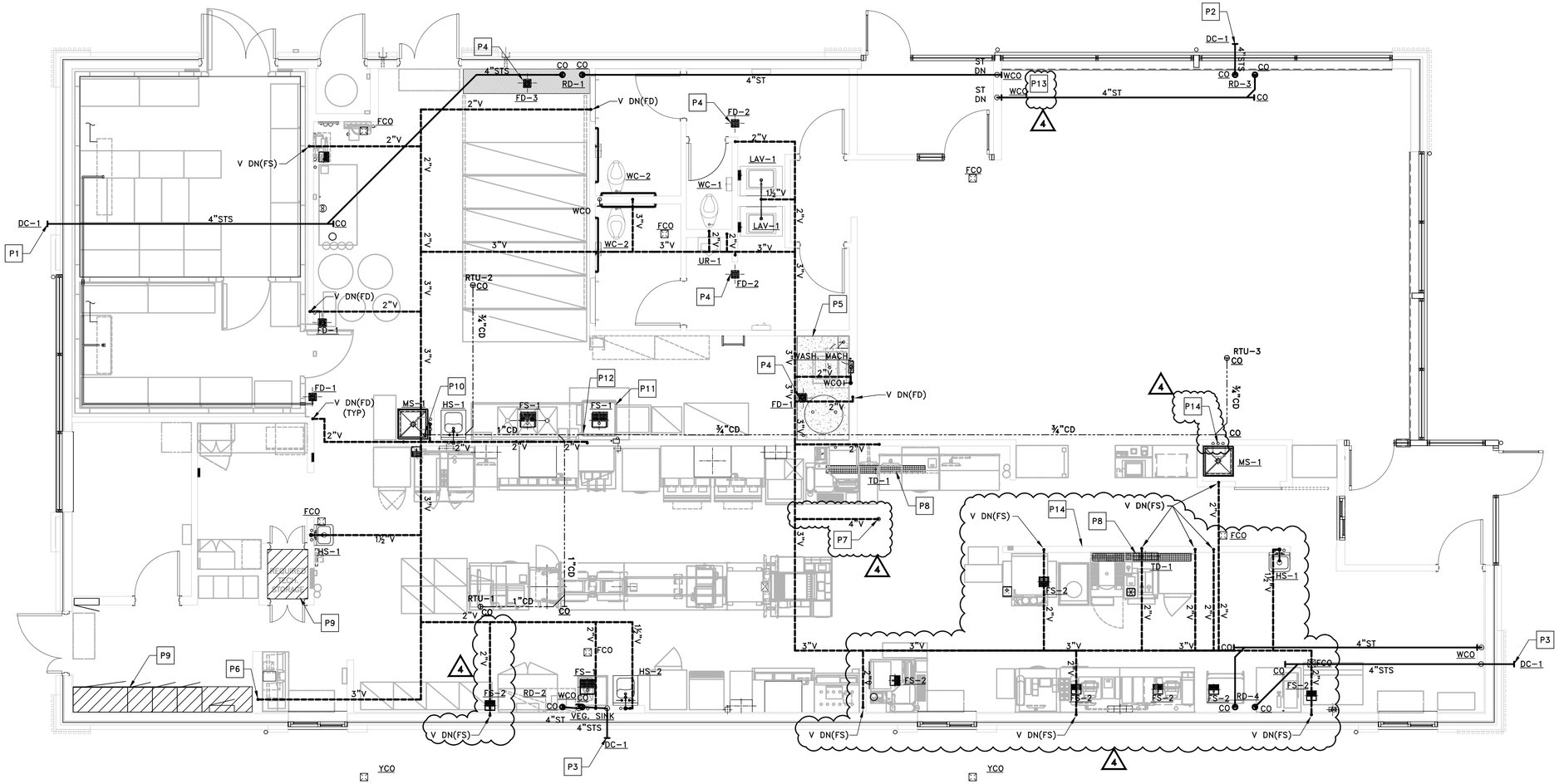

1 P1.2 **VENT & STORM PIPING PLAN**

SCALE: 1/4" = 1'-0"

DRAWING NOTES

1. PIPING ROUTES ARE GENERAL AND MAY VARY DUE TO FIELD CONDITIONS. COORDINATE ALL PIPE ROUTES WITH OTHER TRADES.
2. WALL CLEAN-OUTS FOR WASTE PIPING NOT SHOWN FOR CLARITY. SEE GENERAL NOTES FOR REQUIREMENTS.
3. ONLY MAIN FLOOR CLEAN-OUTS ARE SHOWN FOR CLARITY. SEE GENERAL NOTES FOR REQUIREMENTS.
4. ALL HORIZONTAL STORM DRAINAGE PIPING SHALL BE INSULATED TO PREVENT CONDENSATION. INSULATION NOT SHOWN FOR CLARITY. SEE PLUMBING NOTES FOR INSULATION REQUIREMENTS.

KEYED NOTES

- P1 TERMINATE OVERFLOW DRAIN AS HIGH AS POSSIBLE WITH DOWNSPOUT COVER.
- P2 TERMINATE OVERFLOW DRAIN ABOVE TRELLIS WITH DOWNSPOUT COVER. BOTTOM OF DOWNSPOUT OUTLET PIPE SHALL BE AT LEAST 3" BUT NOT MORE THAN 8" ABOVE TOP OF TRELLIS.
- P3 TERMINATE BOTTOM OF OVERFLOW DRAIN A MINIMUM OF 12" ABOVE GRADE WITH DOWNSPOUT COVER.
- P4 PROVIDE PROSET TRAP GUARD® FOR FLOOR DRAIN.
- P5 TOP OF CONCRETE SLAB IS 0'-6" A.F.F.
- P6 VENT FROM GREASE INTERCEPTOR. SEE SITE PLAN FOR CONTINUATION. COORDINATE PIPE ROUTING WITH LOCATION OF GREASE INTERCEPTOR.
- P7 4" VENT UP THROUGH ROOF WITH A 4"x5" VENT CAP
- P8 REFERENCE MANUFACTURER INSTALLATION GUIDE FOR LAYOUT AND SLOPING GUIDELINES PRIOR TO INSTALL AND POURING THE SLAB.
- P9 UTILITIES SHALL NOT BE ROUTED ABOVE THE TECH. CLOSET AND THE SWITCHGEAR.
- P10 CONDENSATE LINE FROM RTUs DOWN TO DRAIN AT MOP SINK INDIRECT WITH AIR GAP 2 x DIAMETER. TERMINATE PIPE ABOVE FLOOD RIM. FURNISHED AND INSTALLED BY PC. SEE COORDINATION SCHEDULE ON P4.1 & M4.1.
- P11 CONTRACTOR SHALL ROUTE ½" OD 304 S/S PIPE (PROVIDED BY OTHERS) FROM TYPE II EXHAUST HOOD TO FLOOR SINK.
- P12 CONTRACTOR SHALL INSTALL DRAIN PIPE AND AIR GAP KIT (PROVIDED BY OTHERS). CONNECT DRAIN HOSES FROM WAREWASHER TO DRAIN PIPE PER MANUFACTURER'S INSTALLATION INSTRUCTIONS. REFER TO DETAIL 9/P3-0 FOR FURTHER DETAILS.
- P13 WALL CLEAN OUTS TO BE INSTALLED 18" A.F.F. ON VESTIBULE SIDE. OPTIONAL: PAINT TO MATCH WALL FINISH FOR CONCEALMENT.
- P14 WALL CLEAN OUTS TO BE INSTALLED 18" A.F.F. ON BACK OF HOUSE SIDE. COORDINATE FINISH COLOR WITH WALL DECOR.

4

STORM PIPE SIZING

RAINFALL = 3.25 IN./HR

VERTICAL LEADERS

ROOF DRAIN	ROOF AREA SQ. FT.	SIZE IN.
RD-1	1,140	4
RD-2	1,221	4
RD-3	686	3
RD-4	686	3
TOTAL	3,733	

HORIZONTAL PIPING (SLOPE ¼" PER FOOT)

ROOF DRAIN	ROOF AREA SQ. FT.	SIZE IN.
RD-1 & RD-3	1,826	6
RD-1, RD-3 & RD-4	2,512	6
RD-1, RD-2, RD-3 & RD-4	3,733	6

LINGLE DESIGN GROUP INC
158 WEST MAIN STREET
LENA, IL 61048
815.369.9155
1764 BLAKE ST
DENVER, CO 8020
303.974.5873
WWW.LINGLEDESIGN.COM

WCW Engineers, Inc.
760 Creel Drive
Wood Dale, Illinois 60191
Tel 630/595-8800
Fax 630/595-8818
www.WCWengineers.com

© ALL DRAWINGS AND WRITTEN MATERIAL CONTAINED HEREIN ARE THE PROPERTY OF THE LINGLE DESIGN GROUP, INC. THEY MAY NOT BE REVISED, COPIED, REUSED, OR DISCLOSED IN ANY MANNER WITHOUT WRITTEN AUTHORIZATION FROM THE ARCHITECT.

LICENSE EXPIRATION: APR 30, 2027

JEFF A. KLINKERT LICENSED PE31503 KANSAS PROFESSIONAL ENGINEER

DATE ISSUED: AUG 2, 2026

STATE #: 150405
PROJECT #: 25-079
NATIONAL #: 44936
DRAWN BY: SC
CHECKED BY: JK

DATE:
10/15/25 - PERMIT / BID SET

REVISIONS
1. 11/12/25 - QC COMMENTS/PROTO UPDATE
2. 02/12/26 - CITY COMMENTS
3. 03/10/26 - DECOR UPDATE
4. 08/02/26 - OWNER COMMENTS / PROTOTYPE UPDATES

CLIENT
McDonald's USA, LLC

PROTOTYPE
BB20 4590 MS-HB
ISSUE DATE 08/27/25

ADDRESS
2320 METROPOLITAN AVE
KANSAS CITY, KS 66106

SHEET TITLE
VENT & STORM PIPING PLAN

SHEET NUMBER:
P1.2

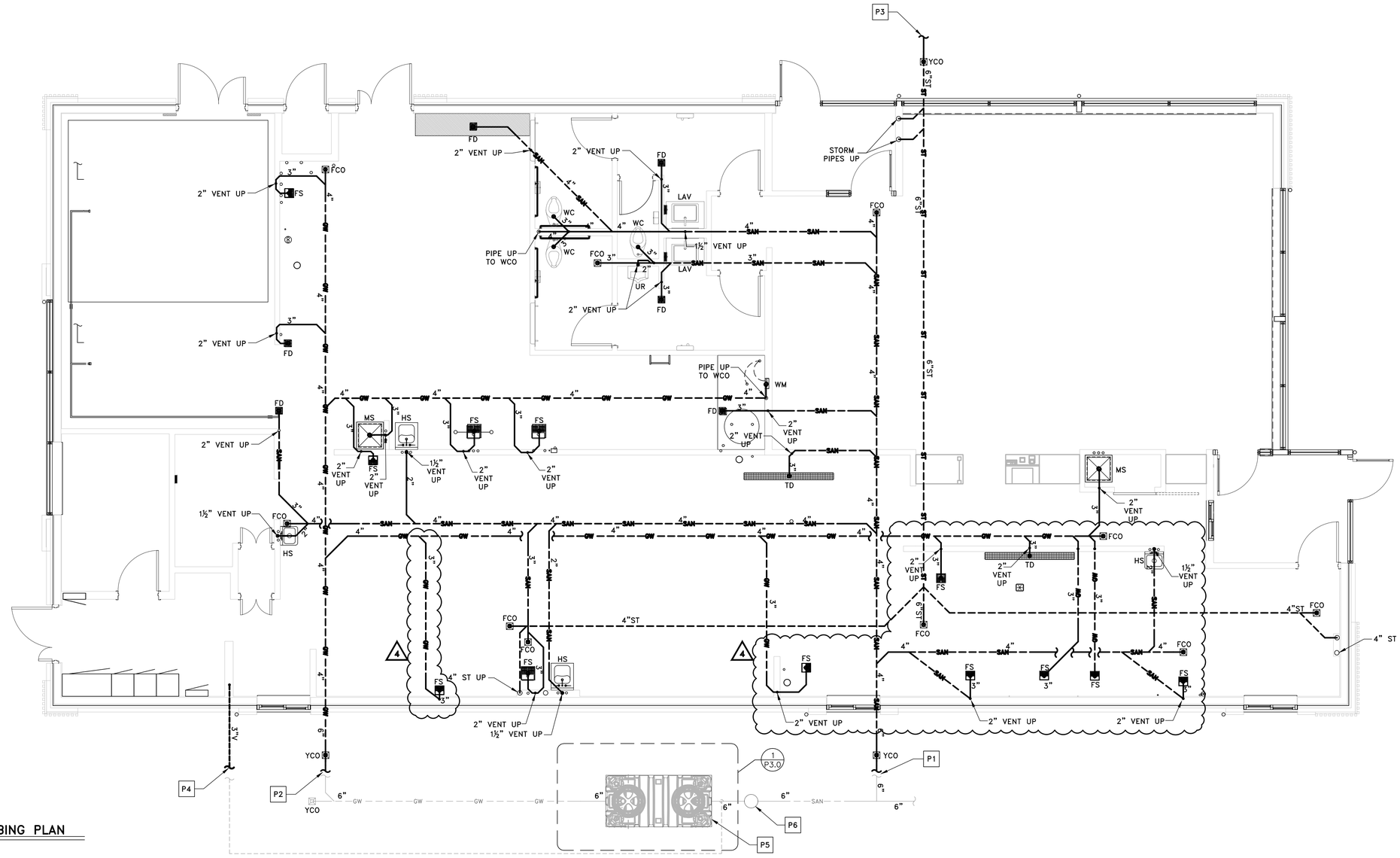

1 P1.3 **UNDERFLOOR PLUMBING PLAN**

SCALE: 1/4" = 1'-0"

DRAWING NOTES

1. PIPING ROUTES ARE GENERAL AND MAY VARY DUE TO FIELD CONDITIONS. COORDINATE ALL PIPE ROUTES WITH OTHER TRADES.
2. WALL CLEAN-OUTS FOR WASTE PIPING NOT SHOWN FOR CLARITY. SEE GENERAL NOTES FOR REQUIREMENTS.
3. ONLY MAIN FLOOR CLEAN-OUTS ARE SHOWN FOR CLARITY. SEE GENERAL NOTES FOR REQUIREMENTS.

KEYED NOTES

- P1 SANITARY LINE TO SANITARY SEWER. SEE SITE PLAN FOR CONTINUATION.
- P2 GREASE LINE TO EXTERIOR GREASE INTERCEPTOR. SEE SITE PLAN FOR CONTINUATION
- P3 STORM LINE TO STORM SYSTEM. SEE SITE PLAN FOR CONTINUATION.
- P4 VENT FROM GREASE INTERCEPTOR. SEE SITE PLAN FOR CONTINUATION. COORDINATE PIPE ROUTING WITH LOCATION OF GREASE INTERCEPTOR.
- P5 GREASE INTERCEPTOR LOCATION SHOWN FOR REFERENCE ONLY. COORDINATE GREASE INTERCEPTOR LOCATION WITH CIVIL ENGINEER AND SITE CONTRACTOR.
- P6 INSTALL SAMPLING PORT (IF REQUIRED) SCHIER, MODEL SV10 FOR SCHIER HYDROMECHANICAL GREASE INTERCEPTOR.

WASTE PIPE SIZING - IPC

FIXTURE TYPE	TRAP SIZE	DFU	QUANTITY	TOTAL
URINAL	2 IN.	4	1	4
WATER CLOSET	3 IN.	4	3	12
LAVATORY	1¼ IN.	1	2	2
WASH SINK (HAND SINK)	1½ IN.	2	4	8
FLOOR DRAIN OR SINK	3 IN.	5	6	30
FLOOR DRAIN OR SINK	4 IN.	6	1	6
EMERGENCY FLOOR DRAIN (BATHROOMS)	3 IN.	0	2	0
			TOTAL	62

GREASE PIPE SIZING - IPC

SERVICE SINK (MOP SINK)	3 IN.	3	2	6
FLOOR DRAIN OR SINK	3 IN.	5	9	45
FLOOR DRAIN OR SINK	4 IN.	6	1	6
WASHING MACHINE	2 IN.	3	1	3
			TOTAL	60

STORM PIPE SIZING

RAINFALL = 3.25 IN./HR

VERTICAL LEADERS

	ROOF AREA	SIZE
ROOF DRAIN	SQ. FT.	IN.
RD-1	1,330	4
RD-2	1,332	4
RD-3	916	4
RD-4	915	4
TOTAL	4,493	

HORIZONTAL PIPING (SLOPE ⅛" PER FOOT)

	ROOF AREA	SIZE
ROOF DRAIN	SQ. FT.	IN.
RD-1 & RD-3	2,246	6
RD-1, RD-3 & RD-4	3,161	6
RD-1, RD-2, RD-3 & RD-4	4,493	6

LINGLE DESIGN GROUP INC
158 WEST MAIN STREET
LENA, IL 61048
815.369.9155
1764 BLAKE ST
DENVER, CO 8020
303.974.5873
WWW.LINGLEDESIGN.COM

WCW Engineers, Inc.
760 Creel Drive
Wood Dale, Illinois 60191
Tel 630/595-8800
Fax 630/595-8818
www.WCWengineers.com

© ALL DRAWINGS AND WRITTEN MATERIAL CONTAINED HEREIN ARE THE PROPERTY OF THE LINGLE DESIGN GROUP, INC. THEY MAY NOT BE REVISED, COPIED, REUSED, OR DISCLOSED IN ANY MANNER WITHOUT WRITTEN AUTHORIZATION FROM THE ARCHITECT.

LICENSE EXPIRATION: APR 30, 2027

JEFF A. KLINKER LICENSED PE31503 KANSAS PROFESSIONAL ENGINEER

DATE ISSUED: AUG 2, 2026

STAMEN: 150405
PROJECT #: 25-079
NATIONAL #: 44936
DRAWN BY: SC
CHECKED BY: JK

DATE: 10/15/25 - PERMIT / BID SET

REVISIONS

1. 11/12/25 - QC COMMENTS/PROTO UPDATE
2. 02/12/26 - CITY COMMENTS
3. 03/10/26 - DECOR UPDATE
4. 08/02/26 - OWNER COMMENTS / PROTOTYPE UPDATES

CLIENT

McDonald's USA, LLC

PROTOTYPE
BB20 4590 MS-HB
ISSUE DATE 08/27/25

ADDRESS
2320 METROPOLITAN AVE
KANSAS CITY, KS 66106

SHEET TITLE
UNDERGROUND PLUMBING

SHEET NUMBER:
P1.3

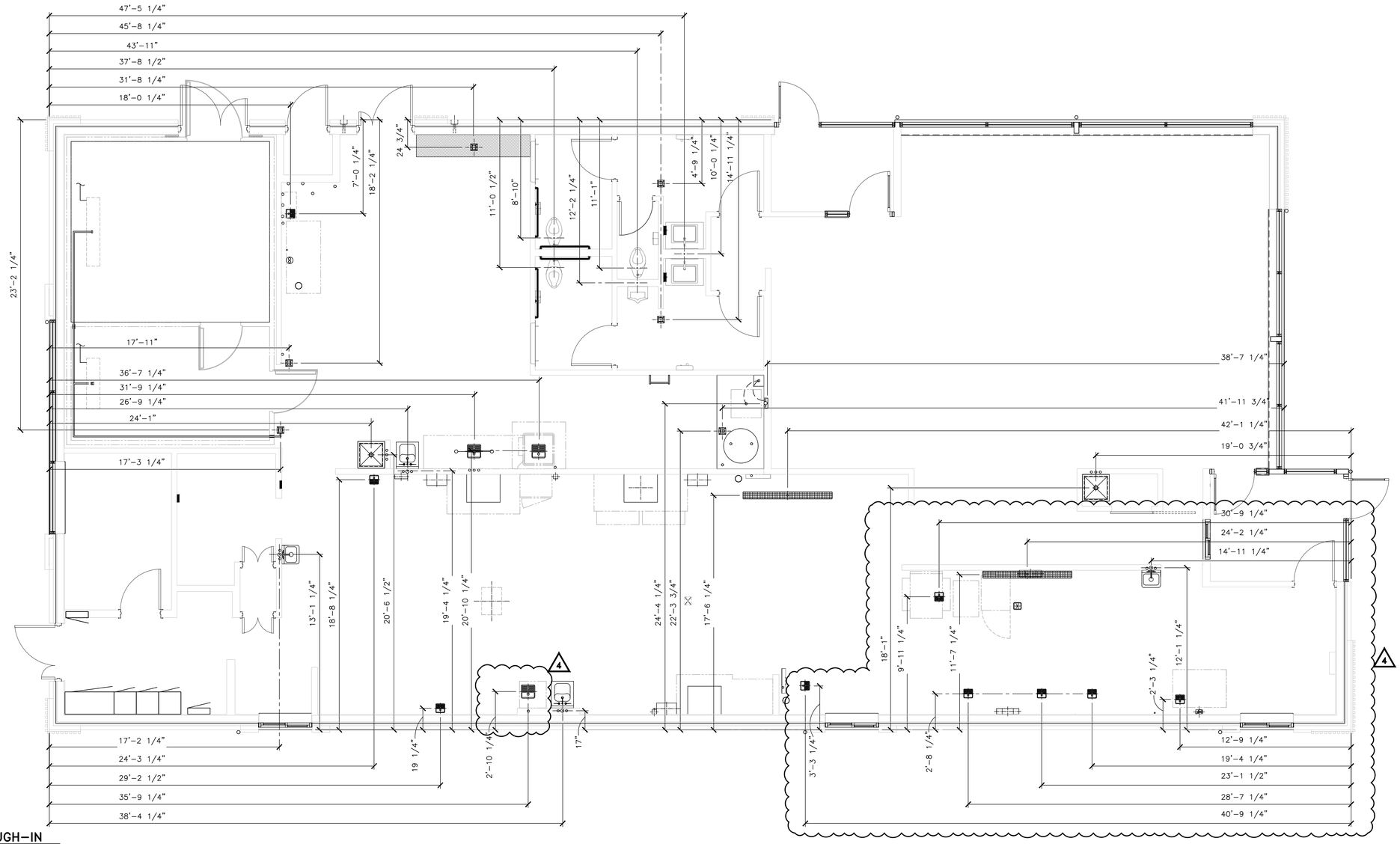

1 / P1.4 **UNDERGROUND ROUGH-IN**

SCALE: 1/4" = 1'-0"

DRAWING NOTES

1. THIS PLAN IS PROVIDED AS A GUIDE FOR THE PLUMBING CONTRACTOR. ALL DIMENSIONS ARE ROUNDED TO THE NEAREST ¼" AND ARE TAKEN FROM THE OUTSIDE EDGE OF THE FOUNDATION WALL TO CENTERLINE OF SLAB PENETRATION.

LINGLE DESIGN GRO
158 WEST MAIN S
LENA, IL 610
815.369.91
1764 BLAKE
DENVER, CO 8
303.974.58
WWW.LINGLEDESIG

WCW Engineers, Inc.
760 Creel Drive
Wood Dale, Illinois
Tel 630/595-880
Fax 630/595-881
www.WCWengine

© ALL DRAWINGS AND WRITTEN MATERIAL CONTAINED HEREIN AR
PROPERTY OF THE LINGLE DESIGN GROUP, INC. THEY MAY NOT BE RI
COPIED, REUSED, OR DISCLOSED IN ANY MANNER WITHOUT WRIT
AUTHORIZATION FROM THE ARCHITECT.

LICENSE EXPIRATION: APR

JEFF A. KLINKERT LICENSED PE31503 KANSAS PROFESSIONAL ENGINEER

DATE ISSUED: AUG

STATE #: 150405	PROJECT #: 25-079
NATIONAL #: 44936	DRAWN BY: SC
	CHECKED BY: JK

DATE: 10/15/25 - PERMIT / BID SET

REVISIONS

1. 11/12/25 - QC COMMENTS/PROTO UPI
2. 02/12/26 - CITY COMMENTS
3. 03/10/26 - DECOR UPDATE
4. 08/02/26 - OWNER COMMENTS / PROTOTYPE UPDATES

CLIENT

McDonald's USA, LLC

PROTOTYPE

BB20 4590 MS-HB
ISSUE DATE 08/27/25

ADDRESS

2320 METROPOLITAN AVE
KANSAS CITY, KS 66106

SHEET TITLE

UNDERGROUND ROUGH-IN

SHEET NUMBER:

P1.4

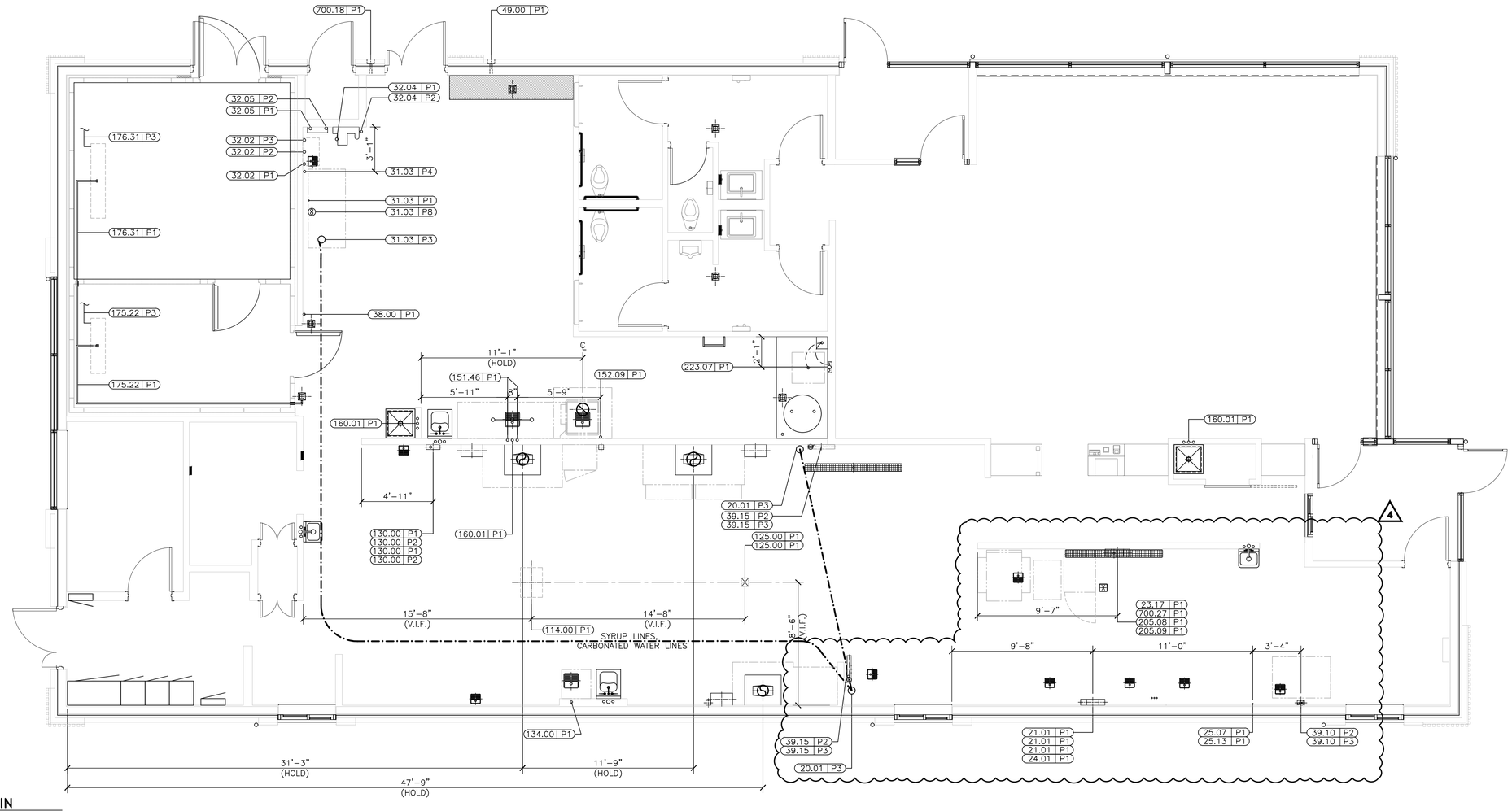

1 P1.6 **OVERHEAD ROUGH-IN**

SCALE: 1/4" = 1'-0"

VIF = Verify in Field
PC = Plumbing Contractor
BSI = Beverage System Installer

PLUMBING SCHEDULE

TAG #	QTY	DESCRIPTION	GAS TYPE	GAS BTU	GAS SIZE	HW	CW	MISC PLBG	HGT AFF	DRAIN	REQUIREMENTS & REMARKS
020.01P3	2	AUTOMATED BEVERAGE SYSTEM 2.0	–	–	–	–	–	SODA BUNDLE	SEE RMKS	–	DN CHASE FROM SODA SYSTEM – "T" FROM D/T – BSI TO MAKE FINAL CONNECTIONS PER LOCAL CODES
021.01P1	3	COFFEE BREWER (GLASS DECANTERS)	–	–	–	–	1/4" TRTD	–	SEE RMKS	–	DN CHASE FROM SODA SYSTEM – IF NO CHASE RUN IN 2"COND TO JB –BSI TO CONN CW LINE PER LOCAL CODES. 1/4" R.O. WATER OPTIONAL
023.10P1	1	ESPRESSO BREWER	–	–	–	–	3/8" R.O.	–	SEE RMKS	3/8" IND	DN CHASE FROM R.O. SYSTEM – IF NO CHASE RUN IN 2"COND TO JB –BSI TO CONN CW LINE PER LOCAL CODES
024.02P1	1	JUICE DISPENSER	–	–	–	–	1/2" FLTR	–	SEE RMKS	–	–
025.07P1	1	INFUSION TEA BREWER – MIS	–	–	–	–	1/2" TRTD	3/8" CO2	SEE RMKS	–	DN CHASE FROM SODA SYSTEM – IF NO CHASE RUN IN 2"COND TO JB –BSI TO CONN CW LINE PER LOCAL CODES
031.03P1	1	SODA SYSTEM PACKAGE B.I.B.(RECIRCULATING– 3 TOWERS)	–	–	–	–	–	3/8" OUTLET	SEE RMKS	–	FLEX LINE OVERHEAD TO VARIOUS EQUIP. BSI TO MAKE FINAL CONN PER LOCAL CODES
031.03P3	1	SODA SYSTEM PACKAGE B.I.B.(RECIRCULATING– 3 TOWERS)	–	–	–	–	–	SODA BUNDLE	SEE RMKS	–	OVERHEAD TO SODA TOWER CHASE(S) – BSI TO MAKE FINAL CONNECTIONS PER LOCAL CODES
031.03P4	1	SODA SYSTEM PACKAGE B.I.B.(RECIRCULATING– 3 TOWERS)	–	–	–	–	3/4"	–	1'–6"	3/4" IND	BSI TO MAKE CONNECTION FROM BACKFLOW PREVENTER (VERIFY HEIGHT IN FIELD)
031.03P8	1	SODA SYSTEM PACKAGE B.I.B.(RECIRCULATING– 3 TOWERS)	–	–	–	–	–	REFRIG LINES	SEE RMKS	–	FROM REMOTE CONDENSING UNIT
032.02P1	1	REVERSE OSMOSIS WATER FILTRATION SYSTEM – TANKLESS	–	–	–	–	3/8" FLTR	–	SEE RMKS	–	FLEX LINE OVERHEAD FROM SODA SYSTEM –BSI TO MAKE FINAL CONN PER LOCAL CODES
032.02P2	1	REVERSE OSMOSIS WATER FILTRATION SYSTEM – TANKLESS	–	–	–	–	–	3/8" OUTLET	SEE RMKS	–	FLEX LINE OVERHEAD TO RAPID STEAMER, ESPRESSO, AND COFFEE (OPT.) –BSI TO MAKE FINAL CONN PER LOCAL CODES
032.02P3	1	REVERSE OSMOSIS WATER FILTRATION SYSTEM – TANKLESS	–	–	–	–	–	–	–	1/4" WASTE	–
032.04P1	1	WATER FILTRATION SYSTEM	–	–	–	–	–	3/4" INLET	6'–0"	–	–
032.04P2	1	WATER FILTRATION SYSTEM	–	–	–	–	–	3/4" OUTLET	–	–	3/4" GHT RINSE CONN. FLEX LINE OVHD. TO RAPID STEAMER, ESPRESSO, & COFFEE (OPT.) –BSI TO MAKE FINAL CONN PER LOCAL CODE
032.05P1	1	WATER FILTRATION SYSTEM	–	–	–	–	–	3/4" INLET	SEE RMKS	–	FLEX LINE OVERHEAD FROM R.O. SYSTEM –BSI TO MAKE FINAL CONN PER LOCAL CODES
032.05P2	1	WATER FILTRATION SYSTEM	–	–	–	–	–	3/4" OUTLET	SEE RMKS	–	FLEX LINE OVERHEAD TO COMBI OVENS AND STAGING CABINET –BSI TO MAKE FINAL CONN PER LOCAL CODES
038.00P1	1	CLEAN IN PLACE PANEL	–	–	–	–	1/2" FLTR	–	6'–0"	–	FOR CLEANING BULK COKE TANKS. INSTALL HEIGHT TO BOTTOM OF UNIT
039.10P2	1	ICE MACHINE – 1400 LB.	–	–	–	–	1/2" TRTD	–	SEE RMKS	3/4" IND	WATER LINE OVERHEAD FROM SODA SYSTEM – BSI TO MAKE FINAL CONNECTIONS PER LOCAL CODES

VIF = Verify in Field
PC = Plumbing Contractor
BSI = Beverage System Installer

PLUMBING SCHEDULE

TAG #	QTY	DESCRIPTION	GAS TYPE	GAS BTU	GAS SIZE	HW	CW	MISC PLBG	HGT AFF	DRAIN	REQUIREMENTS & REMARKS
039.10P3	1	ICE MACHINE – 1400 LB.	–	–	–	–	–	REFRIG LINES	–	–	REFRIGERATION LINES OVERHEAD FROM REMOTE CONDENSING UNIT
039.15P2	2	ICE MACHINE – 1000 LB.	–	–	–	–	1/2" TRTD	–	SEE RMKS	3/4" IND	WATER LINE OVERHEAD FROM SODA SYSTEM – BSI TO MAKE FINAL CONNECTIONS PER LOCAL CODES
039.15P3	2	ICE MACHINE – 1000 LB.	–	–	–	–	–	REFRIG LINES	–	–	REFRIGERATION LINES OVERHEAD FROM REMOTE CONDENSING UNIT
049.00P1	1	CO2 FILL BOX	–	–	–	–	–	–	3'–4"	–	HEIGHT IS TO BOTTOM OF FILL BOX;SUPPLIED BY MANUFACTURER;INSTALLED BY G.C. SEE BUILDING ELEVATIONS.
114.00P1	1	HUMIDIFIED HOLDING CABINET	–	–	–	–	3/8" R.O.	–	SEE RMKS	–	BSI EXTENDS CW LINE OVERHEAD FROM R.O. SYSTEM & TERM. W/QUICK DISCONN. AND SHUTOFF
125.00P1	2	RAPID BUN STEAMER	–	–	–	–	3/8" R.O.	–	SEE RMKS	–	BSI EXTENDS CW LINE FROM R.O. SYSTEM & TERM. W/QUICK DISCONN.
130.00P1	2	COMBI OVEN	–	–	–	–	1/2" FLTR	–	SEE RMKS	1 1/2" IND	BSI EXTENDS CW LINE OVERHEAD FROM SODA SYSTEM & TERM. W/QUICK DISCONN. AND SHUTOFF
130.00P2	2	COMBI OVEN	–	–	–	–	3/8" R.O.	–	SEE RMKS	–	BSI EXTENDS CW LINE OVERHEAD FROM R.O. SYSTEM & TERM. W/QUICK DISCONN. AND SHUTOFF
134.00P1	1	VEGETABLE SINK	–	–	–	–	3/4"	–	1'–10"	1–1/2" IND	–
151.46P1	1	SOILED DISHTABLE – RIGHT HAND – 90.5" WIDE	–	–	–	3/4" 140	3/4"	–	1'–6"	–	PC MAKES FINAL CONNECTIONS PER LOCAL CODE
152.09P1	1	WAREWASHER – HIGH TEMP	–	–	–	1/2" 140	1/2"	–	2'–0"	1 1/2"	PC TO PROVIDE HW, CW, DRAIN PIPING. DRAIN @ 9" AFF. FOR ECOLAB FROM WB–2, SPLIT CW: 1/2" CW TO DTV, 3/8" CW TO VAPOR VENT.
160.01P1	3	CHEMICAL SYSTEM	–	–	–	3/4" 110	–	–	SEE RMKS	–	PC TO PROVIDE 3/4" MHT. FINAL CONNECTIONS BY EQUIPMENT INSTALLER PER LOCAL CODE, SEE SHEET P3.0 FOR INSTALLATION HEIGHT
175.18P1	1	COOLER EVAPORATOR	–	–	–	–	–	–	–	3/4" COND.	PC TO ROUTE CONDENSATE DRAIN LINE TO FLOOR DRAIN. PC TO LIQUID–TIGHT SEAL OPENING FOR LINE EXITING BOX
175.18P3	1	COOLER EVAPORATOR	–	–	–	–	–	REFRIG LINES	–	–	RUN TO REMOTE CONDENSING UNIT–INSULATE FULL RUN LENGTH –INSTALLED BY REFRIG. CONTRACTOR
176.27P1	1	FREEZER EVAPORATOR	–	–	–	–	–	–	–	3/4" COND.	PC TO ROUTE CONDENSATE DRAIN LINE TO FLOOR DRAIN. PC TO LIQUID–TIGHT SEAL OPENING FOR LINE EXITING BOX, HEAT TAPE BY REF.
176.27P3	1	FREEZER EVAPORATOR	–	–	–	–	–	REFRIG LINES	–	–	RUN TO REMOTE CONDENSING UNIT–INSULATE FULL RUN LENGTH–INSTALLED BY REFRIG. CONTRACTOR
205.08P1	1	BIC MACHINE	–	–	–	–	1/2" FLTR	–	SEE RMKS	1" IND	DN CHASE. IF NO CHASE RUN IN 2"COND TO JB –BSI TO CONNECT LINES PER LOCAL CODES
205.09P1	1	FROZEN BEVERAGE DISPENSER	–	–	–	–	1/2" FLTR	3/8" CO2	SEE RMKS	–	DN CHASE. IF NO CHASE RUN IN 2"COND TO JB –BSI TO CONNECT LINES PER LOCAL CODES
223.07P1	1	WASHER	–	–	–	3/4" 140	3/4"	–	4'–0"	1 1/2" D	SEE PLUMBING DWGS FOR WALL BOX. INSTALL HEIGHT IS TO BOTTOM OF THE BOX
700.18P1	1	BULK OIL FILL BOX	–	–	–	–	–	–	3'–4"	–	HEIGHT IS TO BOTTOM OF FILL BOX;SUPPLIED BY MANUFACTURER;INSTALLED BY G.C. SEE BUILDING ELEVATIONS.

LINGLE DESIGN GROUP INC
158 WEST MAIN STREET
LENA, IL 61048
815.369.9155
1764 BLAKE ST
DENVER, CO 8020
303.974.5873
WWW.LINGLEDESIGN.COM

WCW Engineers, Inc.
760 Creel Drive
Wood Dale, Illinois 60191
Tel 630/595-8800
Fax 630/595-8818
www.WCWengineers.com

© ALL DRAWINGS AND WRITTEN MATERIAL CONTAINED HEREIN ARE THE PROPERTY OF THE LINGLE DESIGN GROUP, INC. THEY MAY NOT BE REVISED, COPIED, REUSED, OR DISCLOSED IN ANY MANNER WITHOUT WRITTEN AUTHORIZATION FROM THE ARCHITECT.

LICENSE EXPIRATION: APR 30, 2027

JEFF A. KLINKER LICENSED PE31503 KANSAS PROFESSIONAL ENGINEER

DATE ISSUED: AUG 2, 2026

STATE #: 150405
NATIONAL #: 44936
PROJECT #: 25-079
DRAWN BY: SC
CHECKED BY: JK

DATE: 10/15/25 - PERMIT / BID SET

REVISIONS
1 11/12/25 - QC COMMENTS/PROTO UPDATE
2 02/12/26 - CITY COMMENTS
3 03/10/26 - DECOR UPDATE
4 08/02/26 - OWNER COMMENTS / PROTOTYPE UPDATES

CLIENT
McDonald's USA, LLC

PROTOTYPE
BB20 4590 MS-HB
ISSUE DATE 08/27/25

ADDRESS
2320 METROPOLITAN AVE
KANSAS CITY, KS 66106

SHEET TITLE
OVERHEAD ROUGH-IN

SHEET NUMBER:
P1.6

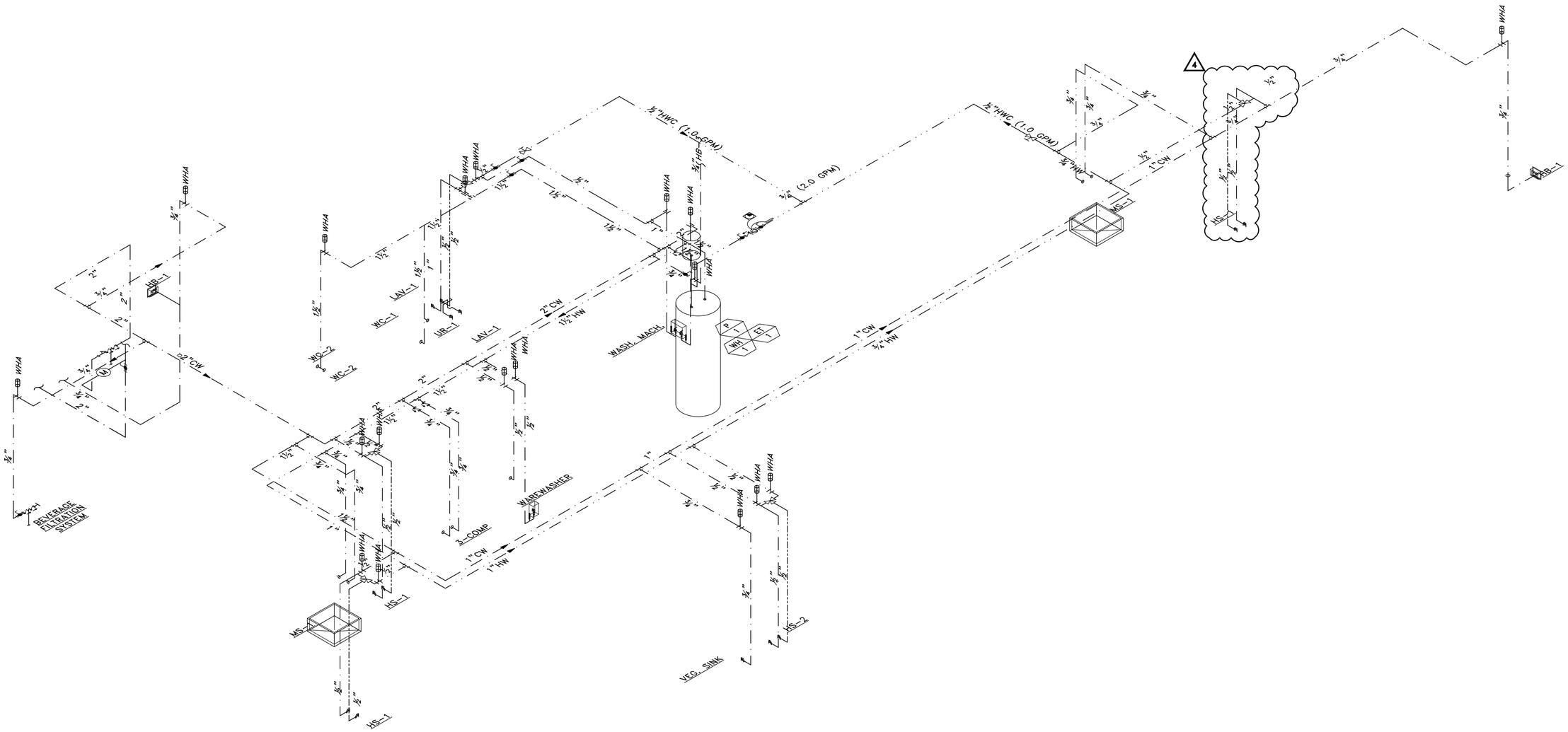

1 P2.0 **DOMESTIC WATER PIPING ISOMETRIC**
SCALE: NONE

LINGLE DESIGN GRO
158 WEST MAIN S
LENA, IL 610
815.369.91
1764 BLAKE
DENVER, CO 8
303.974.58
WWW.LINGLEDESIG

WCW Engineers, Inc.
760 Creel Drive
Wood Dale, Illinois
Tel 630/595-880
Fax 630/595-881
www.WCWenginee

© ALL DRAWINGS AND WRITTEN MATERIAL CONTAINED HEREIN AR
PROPERTY OF THE LINGLE DESIGN GROUP, INC. THEY MAY NOT BE RI
COPIED, REUSED, OR DISCLOSED IN ANY MANNER WITHOUT WRIT
AUTHORIZATION FROM THE ARCHITECT.

LICENSE EXPIRATION: APR

JEFF A. KLINKERT LICENSED PE31503 KANSAS PROFESSIONAL ENGINEER

DATE ISSUED: AUG

STATE #: 150405
PROJECT #: 25-079
NATIONAL #: 44936
DRAWN BY: SC
CHECKED BY: JK

DATE:
10/15/25 - PERMIT / BID SET

REVISIONS
1 11/12/25 - QC COMMENTS/PROTO UPI
2 02/12/26 - CITY COMMENTS
3 03/10/26 - DECOR UPDATE
4 08/02/26 - OWNER COMMENTS / PROTOTYPE UPDATES

CLIENT
McDonald's USA, LLC

PROTOTYPE
BB20 4590 MS-HB
ISSUE DATE 08/27/25

ADDRESS
2320 METROPOLITAN AVE
KANSAS CITY, KS 66106

SHEET TITLE
DOMESTIC WATER ISOMETRIC

SHEET NUMBER:
P2.0

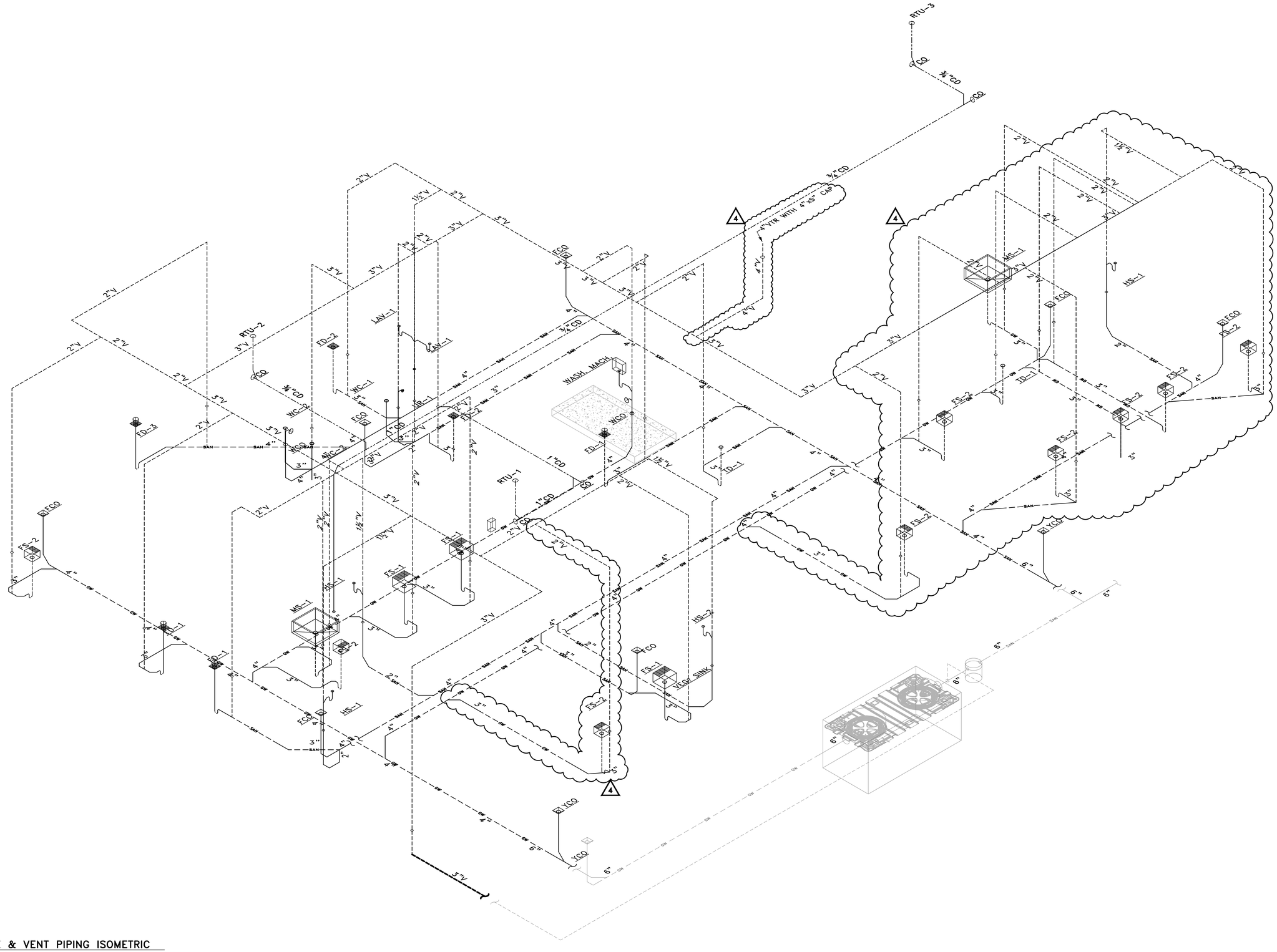

1 P2.1 **WASTE & VENT PIPING ISOMETRIC**

SCALE: NONE

LINGLE DESIGN GROUP INC
158 WEST MAIN STREET
LENA, IL 61048
815.369.9155
1764 BLAKE ST
DENVER, CO 8020
303.974.5873
WWW.LINGLEDESIGN.COM

WCW Engineers, Inc.
760 Creel Drive
Wood Dale, Illinois 60191
Tel 630/595-8800
Fax 630/595-8818
www.WCWengineers.com

© ALL DRAWINGS AND WRITTEN MATERIAL CONTAINED HEREIN ARE THE PROPERTY OF THE LINGLE DESIGN GROUP, INC. THEY MAY NOT BE REVISED, COPIED, REUSED, OR DISCLOSED IN ANY MANNER WITHOUT WRITTEN AUTHORIZATION FROM THE ARCHITECT.

LICENSE EXPIRATION: APR 30, 2027

JEFF A. KLINKERT LICENSED PE31503 KANSAS PROFESSIONAL ENGINEER

DATE ISSUED: AUG 2, 2026

STATE #: 150405	PROJECT #: 25-079
NATIONAL #: 44936	DRAWN BY: SC
	CHECKED BY: JK

DATE:
10/15/25 - PERMIT / BID SET

REVISIONS
1. 11/12/25 - QC COMMENTS/PROTO UPDATE
2. 02/12/26 - CITY COMMENTS
3. 03/10/26 - DECOR UPDATE
4. 08/02/26 - OWNER COMMENTS / PROTOTYPE UPDATES

CLIENT
McDonald's USA, LLC

PROTOTYPE
BB20 4590 MS-HB
ISSUE DATE 08/27/25

ADDRESS
2320 METROPOLITAN AVE
KANSAS CITY, KS 66106

SHEET TITLE
WASTE & VENT ISOMETRIC

SHEET NUMBER:
P2.1

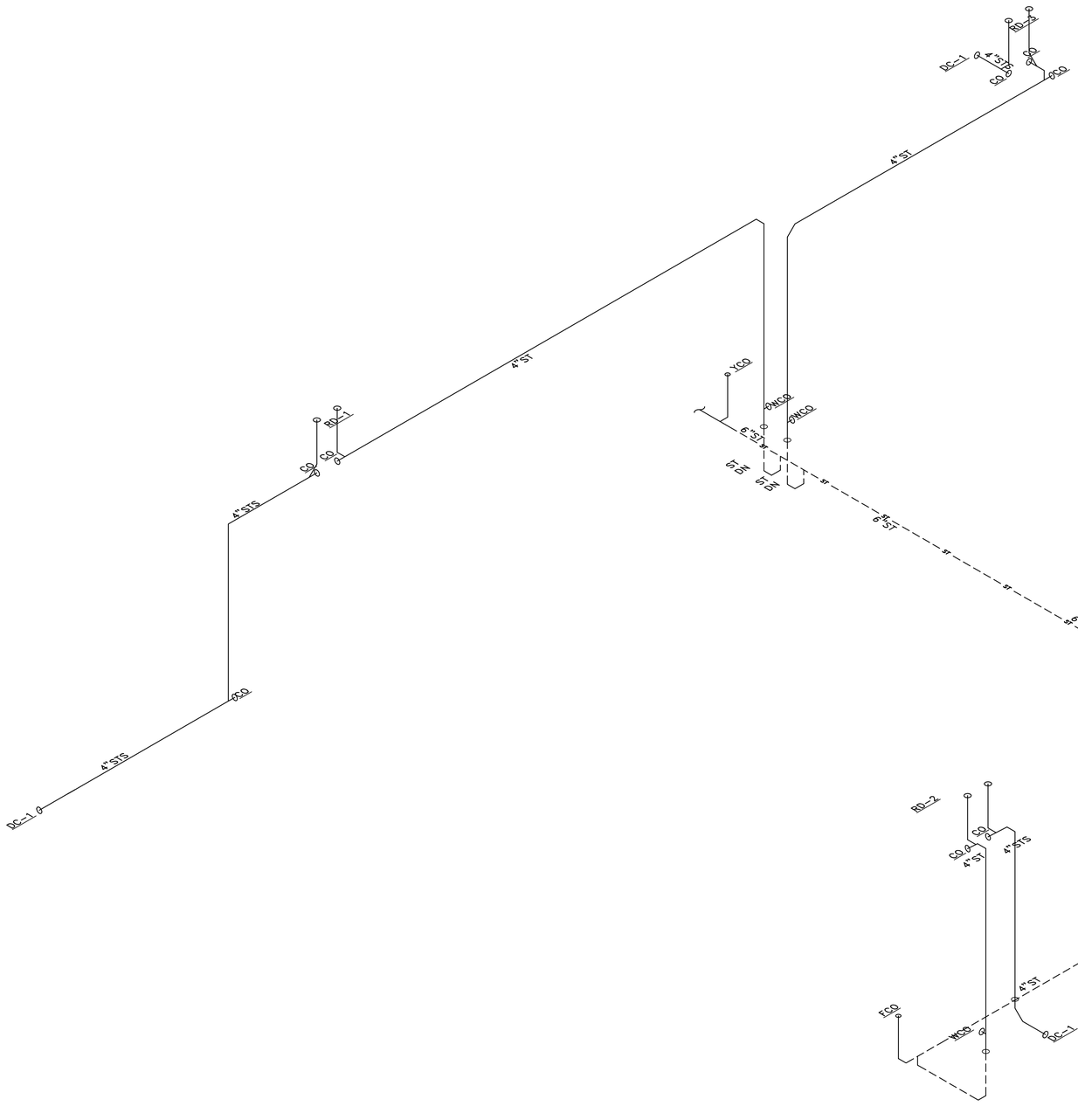

1 P2.2 **STORM PIPING ISOMETRIC**
SCALE: NONE

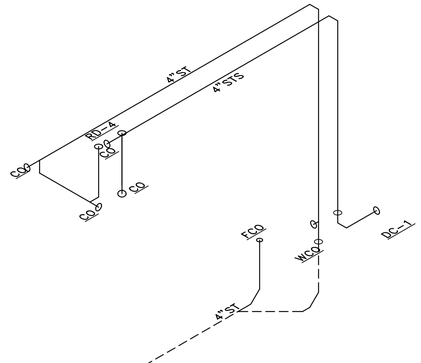

LINGLE DESIGN GRO
158 WEST MAIN S
LENA, IL 610
815.369.91
1764 BLAKE
DENVER, CO 8
303.974.58
WWW.LINGLEDESIG

WCW Engineers, Inc.
760 Creel Drive
Wood Dale, Illinois
Tel 630/595-880
Fax 630/595-881
www.WCWengine

© ALL DRAWINGS AND WRITTEN MATERIAL CONTAINED HEREIN AR
PROPERTY OF THE LINGLE DESIGN GROUP, INC. THEY MAY NOT BE RI
COPIED, REUSED, OR DISCLOSED IN ANY MANNER WITHOUT WRIT
AUTHORIZATION FROM THE ARCHITECT.

LICENSE EXPIRATION: APR

JEFF A. KLINKERT LICENSED PE31503 KANSAS PROFESSIONAL ENGINEER

DATE ISSUED: AUG

STATE #: 150405
PROJECT #: 25-079
NATIONAL #: 44936
DRAWN BY: SC
CHECKED BY: JK

DATE:
10/15/25 - PERMIT / BID SET

REVISIONS
1 11/12/25 - QC COMMENTS/PROTO UPI
2 02/12/26 - CITY COMMENTS
3 03/10/26 - DECOR UPDATE
4 08/02/26 - OWNER COMMENTS / PROTOTYPE UPDATES

CLIENT
McDonald's USA, LLC

PROTOTYPE
BB20 4590 MS-HB
ISSUE DATE 08/27/25

ADDRESS
2320 METROPOLITAN AVE
KANSAS CITY, KS 66106

SHEET TITLE
STORM ISOMETRIC

SHEET NUMBER:
P2.2

FIXTURE INFORMATION:

NAME	TYPE	FLOW RATE	OTHER	QTY.
3–COMP. SINK	3–COMPARTMENT SINK	GPM (1–MINUTE DRAIN TIME): 46.636 GPM (2–MINUTE DRAIN TIME): 21.818	DFU: 6 CAPACITY: 58.182 GAL.	1
FLOOR SINK/DRAIN	FLOOR SINK	GPM (1–MINUTE DRAIN TIME): 5 GPM (2–MINUTE DRAIN TIME): 2.5	DFU: 2 CAPACITY: 0 GAL.	11
MOP SINK – MS–1	MOP BASIN	GPM (1–MINUTE DRAIN TIME): 22.442 GPM (2–MINUTE DRAIN TIME): 11.221	DFU: 3 CAPACITY: 29.922 GAL.	2
MOP SINK – MS–1	MOP BASIN	GPM (1–MINUTE DRAIN TIME): 22.442 GPM (2–MINUTE DRAIN TIME): 11.221	DFU: 3 CAPACITY: 29.922 GAL.	2
VEGETABLE PREP SINK	PREP SINK ONE BOWL	GPM (1–MINUTE DRAIN TIME): 4.675 GPM (2–MINUTE DRAIN TIME): 2.338	DFU: 2 CAPACITY: 6.234 GAL.	1
WAREWASHER (ECOLAB QSR TSC)	DOOR TYPE	GPM (1–MINUTE DRAIN TIME): 60 GPM (2–MINUTE DRAIN TIME): 30	DFU: 2 CAPACITY: 60 GAL.	1
TOTALS:		GPM (1–MINUTE DRAIN TIME): 208.19 GPM (2–MINUTE DRAIN TIME): 104.1	DFU: 38 CAPACITY: 184.26 GAL.	

SIZING DETAILS:

PROJECT INFORMATION
CONSTRUCTIONS TYPE: NEW CONSTRUCTION
ADDITIONAL NOTES: McDONALD'S 4584 BUILDING – PROTOTYPICAL

LOCATION: OUTDOORS
BURIED: YES
HIGH WATER AREA: NO

FLOW RATE CALCULATION:
FLOW RATE TO INTERCEPTOR = (LESSER OF FLOW RATE BY PIPE SIZE AND FLOW RATE BY FIXTURES)
SIZE OF PIPE CONNECTED TO THE GREASE INTERCEPTOR: 4 IN.
DRAINAGE PERIOD: 2 MINUTES
FLOW RATE BY PIPE SIZE: 75 GPM
FLOW RATE BY FIXTURES, 2–MINUTE DRAINAGE PERIOD: 104.097 GPM
FLOW RATE BY FIXTURES, 1–MINUTE DRAINAGE PERIOD: 208.195 GPM
FLOW RATE USED TO SELECT GREASE INTERCEPTOR: 75 GPM
FIXTURE DFU: 38

GREASE OUTPUT:
MENU TYPE: FAST FOOD – FULL PREP
FRYER IN KITCHEN: YES
FOOD WASTE DISPOSER: YES
NUMBER OF SEATS: 43 SEATS
GREASE PRODUCTION VALUE: 0.035 LBS. PER SERVING (6.02 LBS. PER DAY)

30–DAY GREASE PRODUCTION 180.6 LBS.
60–DAY GREASE PRODUCTION: 361.2 LBS.
90–DAY GREASE PRODUCTION: 541.8 LBS.

CALCULATION:
GREASE OUTPUT=(NUMBER OF SEATS)x4(AVERAGE TURNS PER SEAT PER 24 HOURS)x(GREASE PRODUCTION VALUE)x(DAYS BETWEEN PUMP–OUT).

DETAIL
GREASE INTERCEPTOR
SCALE: NONE
1 P3.0

SPECIFICATIONS
Notes:
1. 4" FPT inlet/outlet with 4" plain end adapters, single inlet and triple outlet.
2. Unit weight - w/ cast iron covers: 528 lbs. (For wet weight add 4,254 lbs.)
3. Maximum operating temperature: 150° F continuous
4. Capacities - Liquid: 510 gal.
   Grease: 3,048 lbs. (417 gal.) @100 GPM
   Solids: 128 gal.
5. Built-in flow control. For series installations, only install flow control on the first unit in the series if necessary.
6. For gravity drainage applications only.
7. Do not use for pressure applications.
8. Cover placement allows full access to tank for proper maintenance.
9. A Vent shall be installed downstream of grease interceptor.
10. Engineered inlet and outlet diffusers with inspection ports are removable to inspect / clean piping.
11. Integral air relief / Anti-siphon / Sampling access.
12. Adjustable cover adapters provide up to 4" of additional height.
13. Designed for below-grade, above-grade, indoor or outdoor installations.
14. Safety Star®, access restrictor built into each cover adapter, prevents accidental entry to tanks (450 lb rating).

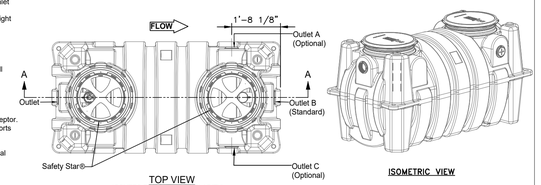

TOP VIEW
(COVERS REMOVED FOR CLARITY)

ISOMETRIC VIEW

ENGINEER SPECIFICATION GUIDE
Schier Great Basin™ grease interceptor model # GB-500 shall be lifetime guaranteed and made in USA of seamless, rotationally-molded polyethylene with minimum 7/16" uniform wall thickness. Flow control cartridge shall be PVC. Interceptor shall be furnished for above or below-grade installation with adjustable cover adapter, Safety Star® access restrictor built into each cover adapter, and three outlet options. Interceptor shall be certified to ASME A112.14.3 (Type C) and CSA B481.1. Interceptor flow rate shall be 100 GPM. Interceptor grease capacity shall be 3,048 lbs. Cover shall provide water/gas-tight seal and have minimum 16,000 lbs. load capacity.

CERTIFIED PERFORMANCE
Great Basin™ hydromechanical grease interceptors are third party performance-tested and listed by IAPMO to ASME #A112.14.3 and CSA B481.1 grease interceptor standards and greatly exceed requirements for grease separation and storage. They are compliant to the Uniform Plumbing Code and the International Plumbing Code.

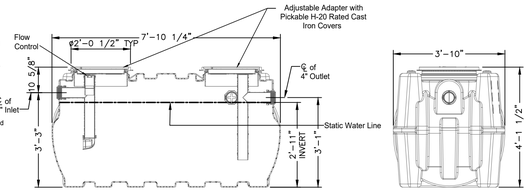

SECTION A–A

END VIEW

SPECIFICATION SHEET

MODEL NUMBER: GB-500

PART NUMBER: 4075-001-01

DESCRIPTION: GB-500 GREASE INTERCEPTOR 100 GPM, 4" INLET/OUTLET, H-20 RATED CAST IRON COVERS

DWG BY: C. BUSENITZ DATE: 4/14/2022 REV: - ECO: -

PROPRIETARY AND CONFIDENTIAL
THE INFORMATION CONTAINED IN THIS DRAWING IS THE SOLE PROPERTY OF SCHIER PRODUCTS. ANY REPRODUCTION IN PART OR AS A WHOLE WITHOUT THE WRITTEN PERMISSION OF SCHIER PRODUCTS IS PROHIBITED.

SCHIER
6455 Woodland Dr
Shawnee, KS 66218
Tel: 913-951-3300
Fax: 913-951-3399
schierproducts.com

KEYED NOTES:
1. ACCESS PANEL FOR THERMOSTATIC MIXING VALVE (SEE CHEMICAL SYSTEM INSTALLATION DETAIL)
2. ECOLAB CHEMICAL SYSTEM (SEE CHEMICAL SYSTEM INSTALLATION DETAIL)
3. 24"Wx36"H WALL GUARD (QTY. 2) FURNISHED WITH MOP SINK (SEE PLUMBING FIXTURE SCHEDULE)
4. MOP SINK FAUCET WITH INTEGRAL VACUUM BREAKER (SEE PLUMBING FIXTURE SCHEDULE)
5. HOSE FURNISHED WITH MOP SINK FAUCET (SEE PLUMBING FIXTURE SCHEDULE)
6. HOSE BRACKET FURNISHED WITH MOP FAUCET (SEE PLUMBING FIXTURE SCHEDULE)
7. FLOOR GRATE

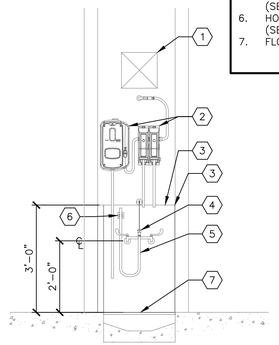

DETAIL
RECESSED MOP SINK
SCALE: ½"=1'–0"
2 P3.0

KEYED NOTES:
1. FAUCET (SEE PLUMBING FIXTURE SCHEDULE)
2. LAVATORY OR HAND SINK (SEE PLUMBING FIXTURE SCHEDULE)
3. CORIAN COUNTERTOP – TOILET ROOMS ONLY (FURNISHED BY G.C.)
4. LAVATORY CARRIER – TOILET ROOMS ONLY (SEE ARCHITECTURAL DRAWINGS)
5. OUTLINE OF ADA COMPLIANT WRAP (SEE PLUMBING FIXTURE SCHEDULE)
6. THERMOSTATIC MIXING VALVE (SEE VALVE SCHEDULE)
7. HOT WATER AND HWC DOWN WALL (WITH BALANCING VALVE AND CHECK VALVE INSTALLED).
8. COLD WATER DOWN TO MIXING VALVE
9. TEMPERATED WATER TO FIXTURES
10. COLD WATER TO FIXTURES AS APPLICABLE.

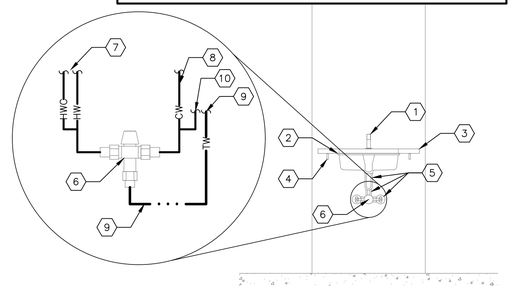

DETAIL
LAVATORY (PUBLIC)
SCALE: ½"=1'–0"
3 P3.0

LINGLE DESIGN GROUP INC
158 WEST MAIN STREET
LENA, IL 61048
815.369.9155
1764 BLAKE ST
DENVER, CO 8020
303.974.5873
WWW.LINGLEDESIGN.COM

WCW Engineers, Inc.
760 Creel Drive
Wood Dale, Illinois 60191
Tel 630/595-8800
Fax 630/595-8818
www.WCWengineers.com

© ALL DRAWINGS AND WRITTEN MATERIAL CONTAINED HEREIN ARE THE PROPERTY OF THE LINGLE DESIGN GROUP, INC. THEY MAY NOT BE REVISED, COPIED, REUSED, OR DISCLOSED IN ANY MANNER WITHOUT WRITTEN AUTHORIZATION FROM THE ARCHITECT.

LICENSE EXPIRATION: APR 30, 2027
JEFF A. KLINKER LICENSED PE31503 KANSAS PROFESSIONAL ENGINEER
DATE ISSUED: AUG 2, 2026

STAMPED: 150405
NATIONAL #: 44936
PROJECT #: 25-079
DRAWN BY: SC
CHECKED BY: JK

DATE:
10/15/25 - PERMIT / BID SET

REVISIONS
1 11/12/25 - QC COMMENTS/PROTO UPDATE
2 02/12/26 - CITY COMMENTS
3 03/10/26 - DECOR UPDATE
4 08/02/26 - OWNER COMMENTS / PROTOTYPE UPDATES

CLIENT
McDonald's USA, LLC

PROTOTYPE
BB20 4590 MS-HB
ISSUE DATE 08/27/25

ADDRESS
2320 METROPOLITAN AVE
KANSAS CITY, KS 66106

SHEET TITLE
DETAILS

SHEET NUMBER:
P3.0

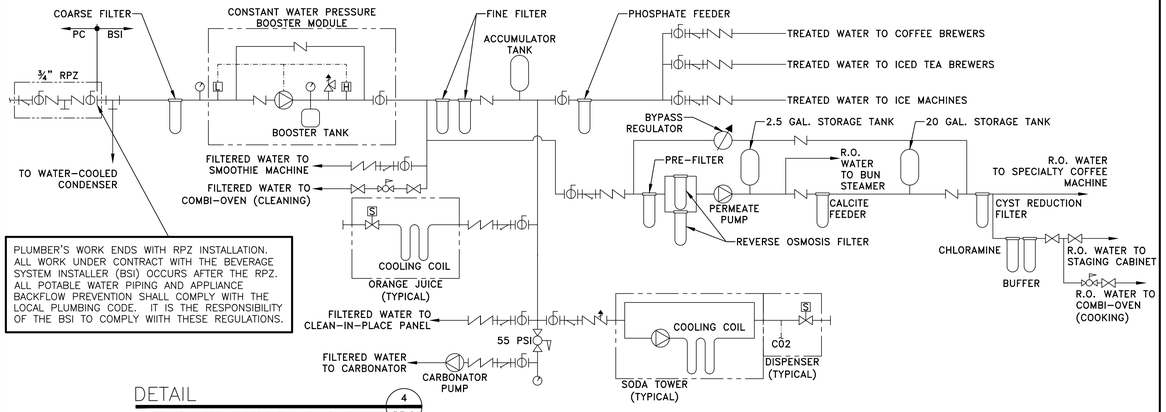

PLUMBER'S WORK ENDS WITH RPZ INSTALLATION. ALL WORK UNDER CONTRACT WITH THE BEVERAGE SYSTEM INSTALLER (BSI) OCCURS AFTER THE RPZ. ALL POTABLE WATER PIPING AND APPLIANCE BACKFLOW PREVENTION SHALL COMPLY WITH THE LOCAL PLUMBING CODE. IT IS THE RESPONSIBILITY OF THE BSI TO COMPLY WIITH THESE REGULATIONS.

DETAIL
BEVERAGE SYSTEM DISTRIBUTION SCHEMATIC
SCALE: NONE
4 P3.0

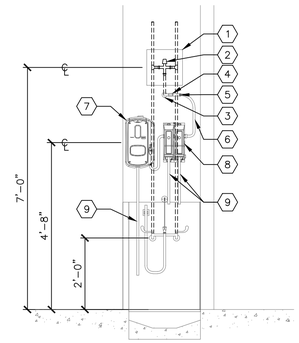

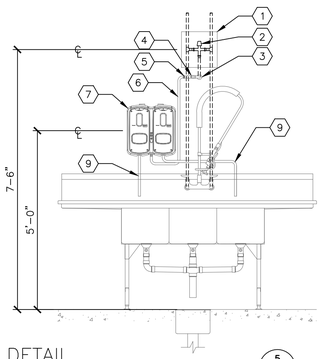

DETAIL
CHEMICAL SYSTEM INSTALLATION
SCALE: ½"=1'–0"
5 P3.0

KEYED NOTES:
1. 12"x12" ACCESS PANEL (COORDINATE INSTALLATION WITH G.C.)
2. THERMOSTATIC MIXING VALVE SET TO 110°F (SEE VALVE SCHEDULE)
3. PIPE THROUGH WALL WITH ESCUTCHEON PLATE
4. SHUT–OFF VALVE
5. ¾" MHT CONNECTION

PLUMBER'S WORK ENDS AT MHT CONNECTION

6. HOSE TO CHEMICAL SYSTEM
7. ECOLAB SOLIDSENSE CHEMICAL DISPENSER
8. ECOLAB SMARTSHAPE CHEMICAL DISPENSER
9. CHEMICAL DISPENSING HOSE

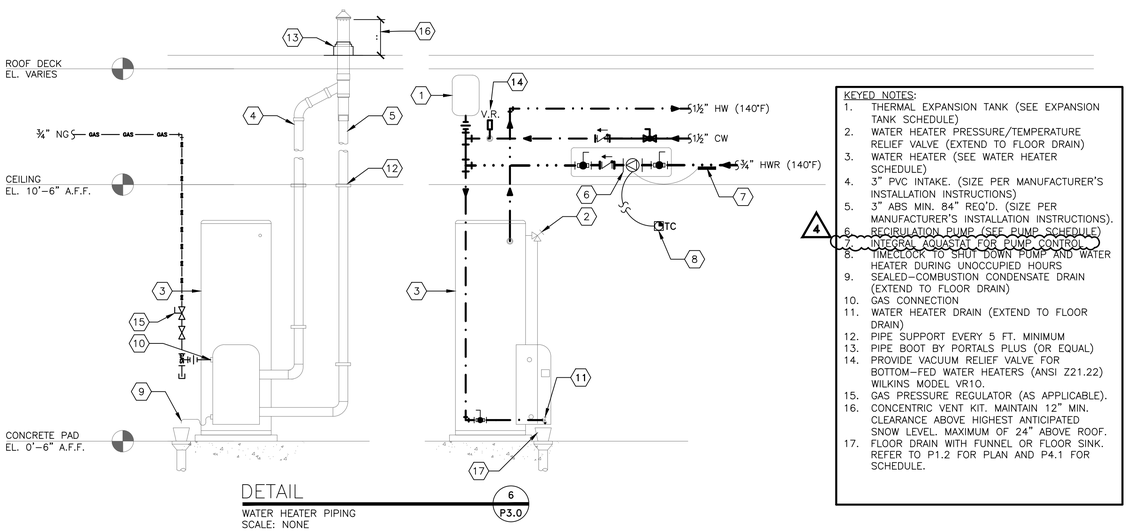

KEYED NOTES:
1. THERMAL EXPANSION TANK (SEE EXPANSION TANK SCHEDULE)
2. WATER HEATER PRESSURE/TEMPERATURE RELIEF VALVE (EXTEND TO FLOOR DRAIN)
3. WATER HEATER (SEE WATER HEATER SCHEDULE)
4. 3" PVC INTAKE. (SIZE PER MANUFACTURER'S INSTALLATION INSTRUCTIONS)
5. 3" ABS MIN. 84" REQ'D. (SIZE PER MANUFACTURER'S INSTALLATION INSTRUCTIONS).
6. RECIRULATION PUMP (SEE PUMP SCHEDULE)
7. INTEGRAL AQUASTAT FOR PUMP CONTROL
8. TIMECLOCK TO SHUT DOWN PUMP AND WATER HEATER DURING UNOCCUPIED HOURS
9. SEALED–COMBUSTION CONDENSATE DRAIN (EXTEND TO FLOOR DRAIN)
10. GAS CONNECTION
11. WATER HEATER DRAIN (EXTEND TO FLOOR DRAIN)
12. PIPE SUPPORT EVERY 5 FT. MINIMUM
13. PIPE BOOT BY PORTALS PLUS (OR EQUAL)
14. PROVIDE VACUUM RELIEF VALVE FOR BOTTOM–FED WATER HEATERS (ANSI Z21.22) WILKINS MODEL VR10.
15. GAS PRESSURE REGULATOR (AS APPLICABLE).
16. CONCENTRIC VENT KIT. MAINTAIN 12" MIN. CLEARANCE ABOVE HIGHEST ANTICIPATED SNOW LEVEL. MAXIMUM OF 24" ABOVE ROOF.
17. FLOOR DRAIN WITH FUNNEL OR FLOOR SINK. REFER TO P1.2 FOR PLAN AND P4.1 FOR SCHEDULE.

DETAIL
WATER HEATER PIPING
SCALE: NONE
6 P3.0

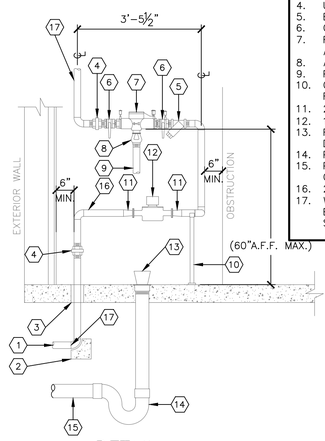

KEYED NOTES:
1. INCOMING UNDERGROUND WATER SERVICE SIZED PER DOMESTIC WATER CALCULATIONS. (MIN. 2")
2. BLOCKING AT CHANGES IN DIRECTION
3. MINIMUM ½" ANNULAR CLEARANCE
4. UNION
5. BRONZE STRAINER
6. QUARTER–TURN BALL VALVE
7. REDUCED PRESSURE ZONE (RPZ) ASSEMBLY
8. AIR GAP FOR RELIEF VALVE
9. PIPING FROM AIR GAP TO FLOOR DRAIN
10. GALVANIZED STEEL PIPE SUPPORTS AS REQUIRED
11. 2"x1½" BUSHING
12. 1½" WATER METER
13. FLOOR DRAIN–PITCH FLOOR TOWARDS DRAIN
14. P–TRAP
15. PIPE TO SEWER–PITCH AND VENT PER CODE
16. 2" PIPE FOR WATER SERVICE
17. WATER PIPING FROM 5 FT. FROM BUILDING TO CEILING PENETRATION SHALL BE COPPER.

DETAIL
INCOMING WATER SERVICE
SCALE: ½"=1'–0"
7 P3.0

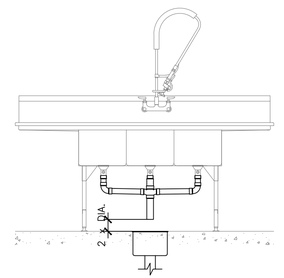

DETAIL
INDIRECT DRAINAGE PIPING (TYP.)
SCALE: ½"=1'–0"
8 P3.0

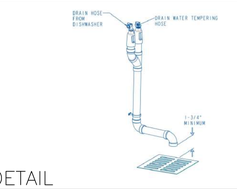

DETAIL
WAREWASHER DRAIN AIR GAP KIT
SCALE: NTS
9 P3.0

GENERAL PLUMBING NOTES

GENERAL:

1. ALL WORK PERFORMED SHALL BE IN ACCORDANCE WITH ALL LOCAL CODES AND ACCEPTABLE TO THE AUTHORITY HAVING JURISDICTION.
2. ALL PLUMBING WORK SHALL BE PERFORMED BY A LICENSED PLUMBER.
3. ALL DIMENSIONS, CLEARANCES AND TOLERANCES SHALL BE VERIFIED PRIOR TO INSTALLATION. ALL ROUGH-IN LOCATIONS SHALL BE COORDINATED WITH THE MANUFACTURER'S SUBMITTAL INFORMATION.
4. ALL DIMENSIONAL INFORMATION IS AS FOLLOWS (UNLESS NOTED OTHERWISE):
   A. UNDERGROUND PIPE IS TO FOUNDATION
   B. OVERHEAD PIPE IS TO FINISHED WALL
   C. ELEVATIONS ARE TO FINISHED FLOOR
5. ALL MATERIALS, FIXTURES AND EQUIPMENT USED SHALL BE IN ACCORDANCE WITH McDONALD'S SPECIFICATIONS. SPECIFICATIONS ARE CONTAINED WITHIN THESE DRAWINGS AND THE McDONALD'S PROJECT MANUAL. ANY CONTRACTOR IN NEED OF A COPY OF THE McDONALD'S PROJECT MANUAL SHALL CONTACT THE McDONALD'S AREA CONSTRUCTION MANAGER. ANY VARIANCE FROM THE McDONALD'S SPECIFICATIONS SHALL BE REVIEWED AND APPROVED BY THE ENGINEER-OF-RECORD.
6. SEE COORDINATION SCHEDULE FOR ADDITIONAL SCOPE OF WORK.
7. ALL EQUIPMENT SHALL BE INSTALLED IN ACCORDANCE WITH ITS LISTING AND/OR THE MANUFACTURER'S INSTALLATION INSTRUCTIONS.
8. WHERE POOR SOIL CONDITIONS EXIST OR WHERE SUBSTANTIAL SETTLEMENT OF EITHER THE PIPING, THE BUILDING OR ADJACENT WALKS, PLANTERS, ETC., MAY OCCUR, THE CONTRACTOR SHALL PROVIDE ADEQUATE UNDERSLAB STAINLESS STEEL PIPE HANGERS OR APPROVED OTHER SUPPORT.
9. ALL PIPE SLEEVES SHALL BE PROPERLY SEALED AND INSULATED TO PREVENT HEAT LOSS AND SEEPAGE.
10. ALL PIPE INSULATION SHALL BE PROTECTED FROM DAMAGE FROM PIPE HANGERS. PROTECTION SHALL BE LIGHT GAUGE GALVANIZED STEEL OR EQUAL.
11. ALL PENETRATIONS OF FIRE-RATED WALLS SHALL BE FIRESTOPPED WITH AN APPROVED AND LISTED FIRESTOPPING SYSTEM.

SANITARY AND VENT SYSTEMS:

1. THE BUILDING SANITARY PIPE SHALL BE LOCATED A MINIMUM OF 10 FT. FROM THE INCOMING WATER SERVICE. WHERE A 10 FT. SEPARATION IS NOT POSSIBLE, THE BOTTOM OF THE WATER SERVICE PIPE SHALL BE A MINIMUM OF 12 IN. ABOVE THE TOP OF THE HIGHEST POINT OF THE SANITARY PIPE.
2. ALL SANITARY AND VENT PIPE SHALL BE PVC TYPE DWV, ABS OR CAST-IRON WHERE REQUIRED BY CODE.
3. ALL HORIZONTAL SANITARY PIPE SHALL BE INSTALLED WITH A MINIMUM PITCH AS FOLLOWS:

PIPE SIZE	MIN. SLOPE
2½" OR LESS	¼" PER FT.
3" TO 6"	⅛" PER FT.
8" OR LARGER	⅛" PER FT. (MIN)

4. CLEANOUTS SHALL BE INSTALLED IN ALL HORIZONTAL DRAINAGE PIPE AND SHALL BE LOCATED NOT MORE THAN 100 FT. APART. (UNLESS OTHERWISE DICTATED BY LOCAL CODES).
5. CLEANOUTS SHALL BE INSTALLED AT ALL CHANGES OF DIRECTION GREATER THAN 45 DEGREES. WHERE MORE THAN ONE CHANGE OF DIRECTION OCCURS IN A SINGLE PIPE RUN, ONLY ONE (1) CLEANOUT SHALL BE REQUIRED FOR EVERY 40 FEET OF DEVELOPED LENGTH.
6. CLEANOUTS SHALL BE INSTALLED ON PIPES PRIOR TO ANY SLAB PENETRATION.
7. WHERE PIPING IS LOCATED WITHIN WALL CAVITIES, ACCESS TO THE CLEANOUTS SHALL BE PROVIDED.
8. CLEANOUTS ON 6-IN. AND SMALLER PIPES SHALL BE PROVIDED WITH A CLEARANCE OF NOT LESS THAN 18 IN. CLEANOUTS ON 8-IN. AND LARGER PIPE SHALL BE PROVIDED WITH A CLEARANCE OF NOT LESS THAN 36 IN.
9. ALL SUSPENDED SANITARY AND VENT PIPE SHALL BE SUPPORTED AS FOLLOWS:

MATERIAL	MAX. HORIZ. SPACING	MAX. VERT. SPACING
ABS	4 FT.	10 FT.
PVC (TYPE DWV)	4 FT.	10 FT.
CAST-IRON (<10 FT. PIPE SECTIONS)	5 FT.	15 FT.
CAST-IRON (10 FT. PIPE SECTIONS)	10 FT.	15 FT.

10. ALL PLUMBING FIXTURES SHALL BE VENTED AND THE MAXIMUM DISTANCE FROM THE FIXTURE TRAP TO THE VENT SHALL BE AS FOLLOWS:

TRAP SIZE	SLOPE	DISTANCE
1¼"	¼" PER FT.	2'-6"
1½"	¼" PER FT.	3'-6"
2"	¼" PER FT.	5'-0"
3"	⅛" PER FT.	6'-0"
4" & LARGER	⅛" PER FT.	10'-0"

11. ALL PLUMBING VENTS THROUGH THE ROOF SHALL TERMINATE A MINIMUM OF 12 INCHES ABOVE THE ROOF AND SHALL BE LOCATED A MINIMUM OF 8 FT. FROM ANY PARAPET WALL. WHERE A VENT TERMINATES WITHIN 8 FT. OF A PARAPET WALL, THE VENT SHALL TERMINATE A MINIMUM OF 6 INCHES ABOVE THE PARAPET.
12. ALL PLUMBING VENTS SHALL TERMINATE A MINIMUM OF 10 FT. HORIZONTALLY FROM ANY OUTDOOR AIR INTAKE. WHERE A PLUMBING VENT IS LOCATED WITHIN 10 FT. OF AN INTAKE, THE VENT SHALL TERMINATE A MINIMUM OF 2 FT. ABOVE THE INTAKE.
13. ALL SIDE WALL VENT TERMINATIONS SHALL BE PROTECTED TO PREVENT BIRDS OR RODENTS FROM ENTERING OR BLOCKING THE VENT OPENING.
14. ALL FLOOR DRAINS THAT DO NOT SERVE EQUIPMENT SHALL BE PROTECTED AGAINST DRYING OUT EITHER THROUGH THE INSTALLATION OF A TRAP PRIMER, DEEP SEAL TRAP OR PROSET TRAP GUARD. ALL TRAPS SHALL BE FILLED WITH AN INITIAL LAYER OF COOKING OIL.
15. ALL APPLIANCES SHALL DRAIN TO AN APPROVED SANITARY WASTE RECEPTOR (FLOOR SINK OR FLOOR DRAIN WITH FUNNEL). INDIRECT DRAINAGE FROM AN APPLIANCE SHALL MAINTAIN AN AIR GAP BETWEEN THE PIPE OUTLET AND THE TOP OF THE RECEPTOR. THE MINIMUM DISTANCE BETWEEN THE PIPE OUTLET AND THE TOP OF THE RECEPTOR SHALL BE TWICE THE DIAMETER OF THE APPLIANCE DRAIN PIPE.

GREASE INTERCEPTORS:

1. SEE SITE PLAN FOR THE SIZE AND LOCATION OF THE GREASE INTERCEPTOR.
2. THE GREASE INTERCEPTOR SHALL BE INSTALLED IN A LOCATION THAT IS ACCESSIBLE FOR PUMPING.
3. THE GREASE INTERCEPTOR SHALL BE CONSTRUCTED OF FIBERGLASS OR ROTATIONALLY-MOLDED POLYETHYLENE. GREASE INTERCEPTOR CONSTRUCTION SHALL CONFORM TO ALL LOCAL CODES. CONCRETE GREASE INTERCEPTORS ARE NOT PERMITTED UNLESS REQUIRED BY THE LOCAL AHJ.
4. GREASE INTERCEPTORS SHALL BE GRAVITY OR HYDROMECHANICAL TYPE, SIZED FOR THE APPLICATION LISTED.
5. THE GREASE INTERCEPTOR SHALL BE VENTED.
6. ACCESS TO THE GREASE INTERCEPTOR SHALL BE PROVIDED WITH TWO (2) 24-IN. MANHOLES. COVER SHALL PROVIDE WATER/GAS-TIGHT SEAL AND HAVE A MINIMUM 16,000 LBS. LOAD CAPACITY. ALL SURFACE WATER MUST DRAIN AWAY FROM MANHOLES.
7. PIPING INLET AND OUTLET SIDES SHALL BE CLEARLY LABELED ON THE TOP OF THE GREASE INTERCEPTOR TO INSURE PROPER INSTALLATION.

DOMESTIC SUPPLY SYSTEMS:

1. THE INCOMING WATER SERVICE PIPE SHALL BE LOCATED A MINIMUM OF 10 FT. FROM THE EXITING SANITARY PIPE. WHERE A 10 FT. SEPARATION IS NOT POSSIBLE, THE BOTTOM OF THE WATER SERVICE PIPE SHALL BE A MINIMUM OF 12 IN. ABOVE THE TOP OF THE HIGHEST POINT OF THE SANITARY PIPE.
2. ALL UNDERGROUND SITE PLUMBING SHALL CONFORM TO NSF 61, SHALL BE TYPE K COPPER TUBING OR COPPER PIPE, POLYETHYLENE (PE), PEX OR CPVC. IF CPVC IS USED, FOAM INSULATION SHALL BE INSTALLED AT ALL CHANGES OF DIRECTION TO ACCOUNT FOR EXPANSION AND CONTRACTION.
3. IF PEX PIPING IS USED, ALL MAINS SHALL BE UPSIZED BY 0.5" DIAMETER.
4. INCOMING WATER SERVICE PRESSURE SHOULD BE BETWEEN 50 AND 55 PSI STATIC. WHERE WATER PRESSURE SERVICE EXCEEDS 80 PSI STATIC, AN APPROVED WATER-PRESSURE REDUCING VALVE WITH STRAINER CONFORMING TO ASSE 1003 SHALL BE INSTALLED. WHERE INCOMING WATER PRESSURE IS BELOW 50 PSI STATIC, A PRESSURE BOOSTER SYSTEM SHALL BE INSTALLED.
5. IF THE RESTAURANT HAS A COMBINED WATER AND FIRE SPRINKLER SERVICE, THE INCOMING WATER SERVICE SHALL BE SIZED BASED ON THE FIRE SPRINKLER CONTRACTOR'S HYDRAULIC CALCULATIONS.
6. PROVIDE A MINIMUM ½" ANNULAR CLEARANCE AROUND ALL PIPE SLAB PENETRATIONS.
7. A REDUCED PRESSURE PRINCIPLE BACKFLOW PREVENTER (RPZ) SHALL BE INSTALLED AT THE INCOMING SERVICE WHERE REQUIRED BY CODE. (MIN. 60" A.F.F.)
8. AN EXPANSION TANK SHALL BE INSTALLED ON THE COLD WATER LINE INLET TO THE WATER HEATER. SEE EXPANSION TANK SCHEDULE.
9. ALL WATER SUPPLY PIPE WITHIN 5 FT. OF THE BUILDING AND INSIDE THE BUILDING SHALL COMPLY WITH NSF 61 AND SHALL BE TYPE L COPPER TUBING, COPPER PIPE, PEX OR CPVC PIPE.
10. CPVC PIPE SHALL BE FLOWGUARD GOLD OR FLOWGUARD BENDABLE AS MANUFACTURED BY LUBRIZOL.
11. CPVC PIPE SHALL BE CONNECTED WITH FLOWGUARD GOLD YELLOW LOW-VOC SOLVENT CEMENT AS MANUFACTURED BY IPS WELD-ON OR OATEY.
12. ALL CPVC PIPE SHALL BE INSULATED TO PREVENT EXPOSURE TO GREASE.
13. ALL SUSPENDED PIPE SHALL BE SUPPORTED AS FOLLOWS:

MATERIAL	MAX. HORIZ. SPACING	MAX. VERT. SPACING
COPPER PIPE	12 FT.	10 FT.
COPPER TUBING ≤1¼"	6 FT.	10 FT.
COPPER TUBING >1½"	10 FT.	10 FT.
CPVC ≤1"	3 FT.	10 FT.
CPVC ≥1¼"	4 FT.	10 FT.
PEX ≤1"	3 FT.	10 FT.
PEX ≥1¼"	4 FT.	10 FT.

14. A REDUCED PRESSURE PRINCIPLE BACKFLOW PREVENTER (RPZ) SHALL BE INSTALLED AT THE INLET TO THE WATER FILTRATION SYSTEM. ALL PIPING DOWNSTREAM OF THE RPZ SHALL BE COPPER OR CROSS-LINKED POLYETHYLENE (PEX).
15. ALL DEVICES, APPLIANCES, AND APPARATUS INTENDED TO SERVE SOME SPECIAL FUNCTION (EX.: SODA MACHINE, COFFEE MACHINE, BEVERAGE DISPENSERS, ETC.) SHALL BE PROVIDED WITH PROTECTION AGAINST BACKFLOW AND CONTAMINATION OF THE WATER SUPPLY SYSTEM. ALL BACKFLOW PREVENTION DEVICES SHALL BE ASSE LISTED AND APPROVED FOR THE DEVICE OR APPLIANCE THEY SERVE.
16. ALL WATER SUPPLY LINES SHALL BE PROVIDED WITH A QUARTER-TURN SHUT-OFF VALVE BEFORE FINAL CONNECTION TO EQUIPMENT.
17. QUARTER-TURN SHUT-OFF VALVES SHALL BE INSTALLED UPSTREAM OF ANY INLINE BACKFLOW PREVENTION DEVICE.
18. ALL VALVES AND BACKFLOW PREVENTION DEVICES SHALL BE INSTALLED WITH FITTINGS THAT FACILITATE REMOVAL IN CASE OF FAILURE.
19. ALL OVERHEAD WATER LINES SHALL BE INSULATED PER SCHEDULE THIS SHEET WITH EXTERNAL JACKETED INSULATION AND A MINIMUM INSTALLED R-VALUE OF 3.7.
20. PRIOR TO BUILDING TURNOVER, THE DOMESTIC WATER SUPPLY SYSTEM SHALL BE PURGED OF DELETERIOUS MATERIAL AND DISINFECTED. DISINFECTION SHALL BE DONE IN ACCORDANCE WITH THE LOCAL HEALTH CODE, PLUMBING CODE OR IN ACCORDANCE WITH AWWA C651 OR AWWA C652.

STORM DRAINAGE SYSTEMS:

1. ALL ROOF DRAINS SHALL BE SIZED IN ACCORDANCE WITH LOCAL CODES AND SHALL CONFORM TO ASME A112.21.2M OR A112.3.1.
2. ALL STORM DRAINAGE PIPING SHALL BE ABS, PVC TYPE DWV OR CAST-IRON WHERE REQUIRED BY CODE.
3. ALL SUSPENDED STORM DRAINAGE PIPE SUPPORT REQUIREMENTS SHALL BE THE SAME AS THE SANITARY AND VENT REQUIREMENTS.
4. ALL HORIZONTAL STORM DRAINAGE PIPE PITCH REQUIREMENTS SHALL BE THE SAME AS THE SANITARY AND VENT REQUIREMENTS.
5. ALL HORIZONTAL STORM DRAINAGE PIPE SHALL BE INSULATED WITH 1" THICK EXTERNAL JACKETED INSULATION AND A MINIMUM INSTALLED R-VALUE OF 3.7 TO PROTECT AGAINST CONDENSATION.
6. CLEANOUTS SHALL BE INSTALLED IN ALL HORIZONTAL DRAINAGE PIPE AND SHALL BE LOCATED NOT MORE THAN 100 FT. APART.
7. CLEANOUTS SHALL BE INSTALLED AT ALL CHANGES OF DIRECTION GREATER THAN 45 DEGREES. WHERE MORE THAN ONE CHANGE OF DIRECTION OCCURS IN A SINGLE PIPE RUN, ONLY ONE (1) CLEANOUT SHALL BE REQUIRED FOR EVERY 40 FEET OF DEVELOPED LENGTH.
8. CLEANOUTS SHALL BE INSTALLED ON PIPES PRIOR TO ANY SLAB PENETRATION.
9. WHERE PIPING IS LOCATED WITHIN WALL CAVITIES, ACCESS TO THE CLEANOUTS SHALL BE PROVIDED.
10. ROOF DRAINS AND OVERFLOW ROOF DRAINS SHALL BE PIPED INDEPENDENTLY. OVERFLOW ROOF DRAINS SHALL NOT BE CONNECTED TO THE PRIMARY ROOF DRAINAGE SYSTEM.
11. MINIMUM PIPING INSULATION THICKNESS HEATING AND HOT-WATER SYSTEMS (STEAM, STEAM CONDENSATE, HOT-WATER HEATING AND DOMESTIC WATER SYSTEMS). PER TABLE 6.8.3-1 & 6.8.3-2 (ASHRAE STANDARD 90.1-2022)

PIPING	MINIMUM INSULATION THICKNESS (IN INCHES) PER NOMINAL PIPE OR TUBE SIZE				
NOMINAL PIPE SIZE	<1	1 TO 1.5	1.5 TO <4	4 TO <8	≥8
DOMESTIC COLD WATER (40°F TO 60°F)	0.5	0.5	1.0	1.0	1.0
TEMPERATE HOT WATER (105°F TO 140°F)	1.0	1.0	1.5	1.5	1.5
HOT WATER (141°F TO 200°F)	1.5	1.5	2.0	2.0	2.0
STORM DRAIN (HORIZONTAL)	–	–	1.0	1.0	1.0

MECHANICAL & PLUMBING COMMISSIONING

1. MECHANICAL & PLUMBING ENGINEER OF RECORD: REVIEW IECC CHAPTER 4, SECTION C408.2 FOR MECHANICAL SYSTEMS AND SERVICE WATER-HEATING SYSTEM COMMISSIONING AND COMPLETION REQUIREMENTS. PROJECTS EXCEEDING THE HEATING AND COOLING CAPACITY THRESHOLDS IN SECTION C408.2 SHALL PROVIDE DOCUMENTATION OF A COMPLETED COMMISSIONING PLAN PREPARED BY A REGISTERED DESIGN PROFESSIONAL OR APPROVED AGENCY. ALL REQUIRED COMMISSIONING DOCUMENTATION SHALL BE PROVIDED TO THE OWNER AND MADE AVAILABLE TO THE AHJ UPON REQUEST.

4

LEGEND

	COLD WATER PIPING
	TEMPERED WATER PIPING (110°F)
	HOT WATER PIPING (140°F)
	RECIRCULATED HOT WATER PIPING
	OVERHEAD LINES (BY P.C.)
SAN	UNDERGROUND SANITARY PIPING
GW	UNDERGROUND GREASE WASTE PIPING
	VENT PIPING
STS	ABOVE GROUND STORM PIPING
STS	UNDERGROUND STORM PIPING
	HOSE BIBB
	CHECK VALVE
	BALL VALVE
	THERMOSTATIC MIXING VALVE
	FLOOR DRAIN
	CLEAN-OUT (FLOOR OR YARD)
	FLOOR SINK
	PRESSURE GUAGE
	LOW PRESSURE SWITCH
	HIGH PRESSURE SWITCH
	SOLENOID VALVE
	THREE-WAY VALVE
	PRESSURE REGULATOR
	DUAL CHECK VALVE OR RPZ
	DUAL CHECK VALVE WITH ATMOSPHERIC VENT
	STRAINER
	RELIEF VENT
	WATER-HAMMER ARRESTER

ABBREVIATIONS

ACM	AREA CONSTRUCTION MANAGER
AVB	ATMOSPHERIC VACUUM BREAKER
BSI	BEVERAGE SYSTEM INSTALLER
CO	CLEAN-OUT
DC	DOWNSPOUT COVER
DFU	DRAINAGE FIXTURE UNIT(S)
EC	ELECTRICAL CONTRACTOR
FAC	FIRE ALARM CONTRACTOR
FCO	FLOOR CLEAN-OUT
FD	FLOOR DRAIN
FPC	FIRE PROTECTION CONTRACTOR
FS	FLOOR SINK
GC	GENERAL CONTRACTOR
GI	GREASE INTERCEPTOR
GPF	GALLONS PER FLUSH
GPM	GALLONS PER MINUTE
GW	GREASE WASTE
HS	HAND SINK
I.P.S.	IRON PIPE SIZE (ALSO NPS)
KEI	KITCHEN EQUIPMENT INSTALLER
KES	KITCHEN EQUIPMENT SUPPLIER
LAV	LAVATORY
MC	MECHANICAL CONTRACTOR
MHT	MALE HOSE THREADS
MS	MOP SINK
NPS	NATIONAL PIPE THREAD STANDARD
NPT	NATIONAL PIPE THREAD TAPERED
O/O	OWNER/OPERATOR
OH	OVERHEAD
P	PUMP
PC	PLUMBING CONTRACTOR
RC	REFRIGERATION CONTRACTOR
RPZ	REDUCED PRESSURE PRINCIPLE BACKFLOW PREVENTER
SS	SANITARY SEWER
ST STS	STORM SEWER (PRIMARY) STORM SEWER (SECONDARY)
SVB	ANTI-SIPHON, SPILL RESISTANT VACUUM BREAKER
TAB	TEST AND BALANACE CONTRACTOR
UG	UNDERGROUND
UR	URINAL
V	VENT
WC	WATER CLOSET
WCO	WALL CLEAN-OUT
WSFU	WATER SUPPLY FIXTURE UNIT(S)
YC	YARD CLEAN-OUT

LINGLE DESIGN GROUP INC
158 WEST MAIN STREET
LENA, IL 61048
815.369.9155
1764 BLAKE ST
DENVER, CO 8020
303.974.5873
WWW.LINGLEDESIGN.COM

WCW Engineers, Inc.
760 Creel Drive
Wood Dale, Illinois 60191
Tel 630/595-8800
Fax 630/595-8818
www.WCWengineers.com

© ALL DRAWINGS AND WRITTEN MATERIAL CONTAINED HEREIN ARE THE PROPERTY OF THE LINGLE DESIGN GROUP, INC. THEY MAY NOT BE REVISED, COPIED, REUSED, OR DISCLOSED IN ANY MANNER WITHOUT WRITTEN AUTHORIZATION FROM THE ARCHITECT.

LICENSE EXPIRATION: APR 30, 2027

JEFF A. KLINKER LICENSED PE31503 KANSAS PROFESSIONAL ENGINEER

DATE ISSUED: AUG 2, 2026

STATE #: 150405
PROJECT #: 25-079
NATIONAL #: 44936
DRAWN BY: SC
CHECKED BY: JK

DATE:
10/15/25 - PERMIT / BID SET

REVISIONS
1 11/12/25 - QC COMMENTS/PROTO UPDATE
2 02/12/26 - CITY COMMENTS
3 03/10/26 - DECOR UPDATE
4 08/02/26 - OWNER COMMENTS / PROTOTYPE UPDATES

CLIENT
McDonald's USA, LLC

PROTOTYPE
BB20 4590 MS-HB
ISSUE DATE 08/27/25

ADDRESS
2320 METROPOLITAN AVE
KANSAS CITY, KS 66106

SHEET TITLE
GENERAL NOTES

SHEET NUMBER:
P4.0

COORDINATION SCHEDULE

GENERAL REQUIREMENTS	FURNISH	INSTALL	FINAL CONNECTION	NOTES
MECHANICAL PERMIT	MC			1–3
HOT WORK (WELDING) PERMIT (IF APPLICABLE)	KES			1–3
REFRIGERATION PERMIT (IF APPLICABLE)	MC			1–3
PLUMBING PERMIT	PC			1–3
ELECTRICAL PERMIT	EC			1–3
FIRE SPRINKLER PERMIT (IF APPLICABLE)	FPC			1–3
FIRE ALARM PERMIT (IF APPLICABLE)	FAC			1–3
CONTRACTOR COORDINATION REQUIREMENTS				
HEATING & AIR–CONDITIONING				
ROOFTOP UNITS, INTAKE AND RELIEF	MCD CP	MC		1–5, 17, 22
ROOF CURBS	MCD CP	MC		1–3, 20, 22
GAS PIPING AND GAS PIPE KIT	PC	PC	PC	1–3, 14, 22–23
CONTROLS WIRING	MC	EC	EC	1–3, 19, 22, 24
POWER WIRING	EC	EC	EC	1–3, 19, 22, 24
CONDENSATE TRAP	MC	PC		1–3, 22–23
CONDENSATE PIPING (IF APPLICABLE)	PC	PC		1–3, 22–23
DUCT–MOUNTED SMOKE DETECTOR	MC	MC	EC	1–3, 22, 24
GENERAL EXHAUST SYSTEMS				
EXHAUST FANS	MCD CP	MC		1–3, 17, 22
ROOF CURBS	MCD CP	MC		1–3, 22
CONTROLS (WHERE APPLICABLE)	MC	EC	EC	1–3, 22, 24
POWER WIRING	EC	EC	EC	1–3, 22, 24
TEMPERATURE CONTROLS				
BUILDING AUTOMATION SYSTEM	MCD CP	MC	EC	1–3, 22, 24
REMOTE SENSORS (RH AND/OR TEMPERATURE)	MC	MC	EC	1–3, 22, 24
CONTROLS WIRING (WHERE APPLICABLE)	MC	EC	EC	1–3, 22, 24
POWER WIRING	EC	EC	EC	1–3, 22, 24
DUCTWORK AND ACCESSORIES				
GALVANIZED SHEET METAL DUCTWORK	MC	MC		1–3, 22
EXTERNAL INSULATION	MC	MC		1–3, 22
INTERNAL INSULATION (IF APPLICABLE)	MC	MC		1–3, 22
WEATHERPROOFING (IF APPLICABLE)	MC	MC		1–3, 22
SPIN–IN COLLARS	MC	MC		1–3, 22
FLEXIBLE DUCTWORK	MC	MC		1–3, 22
VOLUME/BALANCING DAMPERS	MC	MC		1–3, 22
FIRE DAMPERS (IF APPLICABLE)	MC	MC		1–3, 22
FIRESTOPPING (IF APPLICABLE)	MC	MC		1–3, 22
AIR DEVICES AND ACCESSORIES	MC	MC	MC	1–3, 7, 22, 28
PLUMBING SYSTEMS				
WATER HEATERS	MCD CP	PC	PC	1–3, 11–12, 23
HOT AND COLD WATER PIPE	PC	PC	PC	1–3, 23
VENTS AND INTAKES	PC	PC	PC	1–3, 23
THERMOSTATIC MIXING VALVE	PC	PC	PC	1–3, 23
POWER AND CONTROL WIRING	EC	EC	EC	1–3, 23–24
KITCHEN EXHAUST SYSTEMS				
McDONALD'S BACKSHELF EXHAUST HOODS	KES	KEI		1–3, 6, 22, 27
CANOPY EXHAUST HOODS (IF APPLICABLE)	KES	KEI		1–3, 6, 22, 27
BLACK IRON DUCTWORK	KES	KEI		1–3, 6, 22
STAINLESS STEEL DUCTWORK (IF APPLICABLE)	KES	KEI		1–3, 6, 22
ALUMINUM DUCTWORK (IF APPLICABLE)	KES	KEI		1–3, 6, 22
UL LISTED DUCT WRAP	MC	MC		1–3, 6, 22
FIRE–RATED DUCT ENCLOSURE (IF APPLICABLE)	GC	GC		1–3, 6, 20, 22
EXHAUST FANS	MCD CP	MC		1–3, 6, 17, 22
ROOF CURBS	MCD CP	MC		1–3, 6, 20, 22
CURB EXTENSIONS	MC	MC		1–3, 6, 22
CONTROLS (WHERE APPLICABLE)	EC	EC	EC	1–3, 6, 22, 24
POWER WIRING	EC	EC	EC	1–3, 6, 22, 24
FIRE SUPPRESSION SYSTEM	KES	KES	KES	1–3, 16, 22, 27
KITCHEN EQUIPMENT				
COOLER/FREEZER	KES	GC		1–3, 27
EVAPORATOR COILS	KES	MC		1–3, 27
CONDENSATE PIPING	PC	PC	PC	1–3, 23, 27
REMOTE CONDENSING UNIT (MAC)	KES	MC		1–3, 22, 27
ROOF CURBS	MC	MC		1–3, 22
REFRIGERANT PIPING	KES	MC	MC	1–3, 22, 27
POWER WIRING	EC	EC	EC	1–3, 22, 24, 27
CONTROL WIRING	EC	EC	EC	1–3, 24, 27
PIPE PORTALS	MC	MC		1–3, 22
ICE MACHINES	KES	KEI		1–3, 27
WATER SUPPLY PIPING	KES	KEI	BSI	1–3, 27
REMOTE CONDENSING UNITS	KES	MC		1–3, 22, 27
ROOF CURBS	MC	MC		1–3, 22, 27
REFRIGERANT PIPING	KES	MC	MC	1–3, 22, 27
POWER WIRING	EC	EC	EC	1–3, 22, 24, 27
CONTROL WIRING	KES	EC	EC	1–3, 24, 27
PIPE PORTALS	MC	MC		1–3, 22
GRILLS	KES	KES		1–3, 27
GAS PIPING (IF APPLICABLE)	PC	PC	PC	1–3, 23, 27
POWER WIRING	EC	EC	EC	1–3, 24, 27
CONTROL CABLE (6" CLAMSHELL ONLY)	MC	EC	EC	1–3, 23, 24, 27
FRYERS	KES	KES		1–3, 27
GAS PIPING (IF APPLICABLE)	PC	PC	PC	1–3, 23, 27
POWER WIRING	EC	EC	EC	1–3, 24, 27
3–COMPARTMENT SINK	KES	KES		1–3, 12, 27
FAUCETS AND PRE–RINSE SPRAYER	KES	KES		1–3, 27
WATER SUPPLY PIPING	PC	PC	PC	1–3, 23, 27
SANITARY DRAIN PIPING	PC	PC	PC	1–3, 23, 27
HAND SINKS	MCD CP	PC		1–3, 23, 27
FAUCET	MCD CP	PC		1–3, 23, 27
WATER SUPPLY PIPING	PC	PC	PC	1–3, 23, 27
SANITARY DRAIN PIPING	PC	PC	PC	1–3, 23, 27
VEGETABLE SINK	KES	KES		1–3, 23, 27
FAUCET	KES	KES		1–3, 23, 27
WATER SUPPLY PIPING	PC	PC	PC	1–3, 23, 27
SANITARY DRAIN PIPING	PC	PC	PC	1–3, 23, 27
WASHING MACHINE	KES	KES		1–3, 23, 27
WATER SUPPLY PIPING	PC	PC	PC	1–3, 23, 27
SANITARY DRAIN PIPING	PC	PC	PC	1–3, 23, 27
WARE WASHER	KES	KES		1–3, 23, 27
WATER SUPPLY PIPING	PC	PC	PC	1–3, 23, 27
SANITARY DRAIN PIPING	PC	PC	PC	1–3, 23, 27
MISCELLANEOUS ITEMS				
FIRE SPINKLER SYSTEMS	FPC	FPC	FPC	1–3, 15, 25
HVAC EQUIPMENT START–UP	MC			1–3, 22
TEST, ADJUST AND BALANCE HVAC SYSTEMS	TAB			1–3, 22
DOOR GRILLES (IF APPLICABLE)	MC	GC		1–3, 20, 22
ROOF/WALL OPENINGS	GC			1–3, 20–24
APPLIANCE BACKFLOW PREVENTION	KES/BSI	PC	PC	1–3, 23, 27
CO2 DETECTION SYSTEM	KES/BSI	EC/BSI	EC/BSI	1–3, 22, 27

NOTES:
1. THIS SCHEDULE IS INTENDED AS A GUIDE FOR THE WORK TO BE PERFORMED. ALL WORK SHALL BE COORDINATED BETWEEN THE McDONALD'S AREA CONSTRUCTION MANAGER AND ALL GC AND O/O SUBCONTRACTORS.
2. ONE (1) COPY OF THE DECOR PACKAGE DRAWINGS SHALL BE SUPPLIED TO THE GENERAL CONTRACTOR AND EACH OF THE SUBCONTRACTORS. IT SHALL BE THE RESPONSIBILITY OF THE GENERAL CONTRACTOR AND THE SUBCONTRACTORS TO INSURE THAT THEY HAVE RECEIVED THE DECOR PACKAGE DRAWINGS.
3. FOR ANY WORK NOT CLARIFIED IN THIS SCHEDULE OR IN THE NOTES AND SPECIFICATIONS, PLEASE CONSULT THE McDONALD'S CONSTRUCTION MANAGER FOR SCOPE OF WORK.
4. ALL ROOFTOP UNIT EQUIPMENT SUPPLIED BY THE MECHANICAL CONTRACTOR AND THE KITCHEN EQUIPMENT SUPPLIER SHALL BE ON SITE AT THE SAME TIME FOR A SINGLE CRANE LIFT. EQUIPMENT SITE ARRIVAL DATE SHALL BE COORDINATED BETWEEN THE CONSTRUCTION MANAGER, MECHANICAL CONTRACTOR AND KITCHEN EQUIPMENT SUPPLIER.
5. ALL ROOFTOP UNITS INSTALLED IN McDONALD'S RESTAURANTS SHALL BE HIGH EFFICIENCY EQUIPMENT. THE INSTALLATION OF STANDARD EFFICIENCY ROOFTOP UNITS IS PROHIBITED.
6. ALL KITCHEN EQUIPMENT REQUIRING EXHAUST SHALL BE INSTALLED IN ACCORDANCE WITH THESE PLANS. ANY VARIATION FROM THESE PLANS SHALL BE REPORTED TO THE CONSTRUCTION MANAGER AND THE ENGINEER–OF–RECORD.
7. WHERE GYPSUM BOARD CEILINGS ARE INSTALLED, THE MECHANICAL CONTRACTOR SHALL SUPPLY DRYWALL MOUNTING FRAMES FOR LAY–IN TYPE DIFFUSERS.
8. ALL WORK SHOWN ON P1.6 DRAWING(S) SHALL BE COMPLETED BY THE BEVERAGE SYSTEM INSTALLER (OR K.E.S.) UNLESS OTHERWISE NOTED IN THE PLUMBING DRAWINGS.
9. ALL WORK ON P1.0 & P1.2 DRAWING(S) SHALL BE BY THE PLUMBING CONTRACTOR.
10. THE BEVERAGE SYSTEM INSTALLER FURNISHES, RUNS AND CONNECTS ALL FLEXIBLE WATER AND SYRUP LINES FOR ALL AFFECTED EQUIPMENT INCLUDING THE FOLLOWING:
    A. HOT CHOCOLATE
    B. COFFEE BREWER
    C. ICE MACHINE
    D. O.J.
    E. SODA TOWERS
11. ALL WATER HEATERS INSTALLED IN McDONALD'S RESTAURANTS SHALL BE HIGH EFFICIENCY SEALED–COMBUSTION WATER HEATERS. THE INSTALLATION OF STANDARD EFFICIENCY GRAVITY–VENTED WATER HEATERS IS PROHIBITED.
12. THE CONSTRUCTION MANAGER, PLUMBING CONTRACTOR AND KITCHEN EQUIPMENT SUPPLIER SHALL COORDINATE WHICH SOILED DISHWASHER (3–COMPARTMENT SINK) IS BEING INSTALLED IN THE RESTAURANT.
13. ALL GAS PIPING FOR COOKING EQUIPMENT SHALL TERMINATE IN THE CEILING PRIOR TO THE INSTALLATION OF THE PIPING CHASE. UPON INSTALLATION OF THE CHASE, THE GAS PIPING SHALL THEN BE CONTINUED IN THE CHASE FOR FINAL CONNECTION TO THE APPLIANCE.
14. ALL GAS PIPING FOR ROOFTOP EQUIPMENT SHALL BE BROUGHT UP THROUGH THE BASE OF THE UNIT TO MINIMIZE ROOF PENETRATIONS. WHERE THIS IS NOT POSSIBLE, THE PLUMBING CONTRACTOR SHALL PROVIDE THE NECESSARY PIPE PORTALS ON ROOF.
15. ALL FIRE PROTECTION DRAWINGS CONTAINED WITHIN THIS SET ARE STRICTLY FOR REFERENCE ONLY. FIRE SPRINKLER DRAWINGS SHALL BE DESIGNED AND PERMITTED BY A FIRE PROTECTION CONTRACTOR.
16. ALL R–102 WET CHEMICAL FIRE SUPPRESSION SYSTEMS FOR TYPE I HOODS SHALL BE DESIGNED AND INSTALLED BY A LOCAL ANSUL AGENT. THE USE OF DRY CHEMICAL SYSTEMS IS PROHIBITED. THE LOCAL ANSUL AGENT CONTRACT IS HANDLED THROUGH THE KITCHEN EQUIPMENT SUPPLIER.
17. ALL ROOFTOP UNITS AND EXHAUST FANS ARE SUPPLIED WITH A FACTORY–INSTALLED DISCONNECT SWITCH.
18. ELECTRICAL CONTRACTOR SHALL PROVIDE DISCONNECT SWITCHES FOR REMOTE CONDENSING UNITS.
19. ALL ELECTRICAL CONDUITS FOR ROOFTOP EQUIPMENT SHALL BE BROUGHT UP THROUGH THE BASE OF THE UNIT TO MINIMIZE ROOF PENETRATIONS. WHERE THIS IS NOT POSSIBLE, THE ELECTRICAL CONTRACTOR SHALL PROVIDE THE NECESSARY PIPE PORTALS ON ROOF.
20. SEE ARCHITECTURAL DRAWINGS FOR ADDITIONAL INFORMATION.
21. SEE STRUCTURAL DRAWINGS FOR ADDITIONAL INFORMATION.
22. SEE MECHANICAL DRAWINGS FOR ADDITIONAL INFORMATION.
23. SEE PLUMBING DRAWINGS FOR ADDITIONAL INFORMATION.
24. SEE ELECTRICAL DRAWINGS FOR ADDITIONAL INFORMATION.
25. SEE FIRE PROTECTION DRAWINGS FOR ADDITIONAL INFORMATION.
26. SEE FIRE ALARM DRAWINGS FOR ADDITIONAL INFORMATION.
27. SEE KITCHEN DRAWINGS FOR ADDITIONAL INFORMATION.
28. SEE DECOR DRAWINGS FOR ADDITIONAL INFORMATION.

PUMP SCHEDULE

TAG	MANUFACTURER	MODEL	HP	V	Ø	Hz	ACCESSORIES
P–1	GRUNDFOS	ALPHA 15–29 SU/T	1/35	115	1	60	1–3

ACCESSORIES:
1. TIMECLOCK
2. AQUASTAT INTEGRAL TO PUMP
3. CHECK VALVE

NOTES:
1. SEE ELECTRICAL DRAWINGS FOR TIMECLOCK WIRING
2. DESIGN: 2 GPM, 7 FT. HEAD
3. SEE DETAIL 6 ON DRAWING P3.0

4

EXPANSION TANK SCHEDULE

TAG	MANUFACTURER	MODEL	TOTAL VOL.	CONNECTION	ACCESSORIES
ET–1	AMTROL	ST–12	4.4 GAL.	¾"	–

NOTES:
1. SEE DETAIL 6 ON DRAWING P3.0

BACKFLOW PREVENTER SCHEDULE

TYPE	MFR.	MODEL	ASSE LISTING	SERVES	LOCATION
AG	FURN. WITH CHEM. SYS.		1055B	CHEMICAL SYSTEM	DIN. RM.–MOP SINK
AG	FURN. WITH CHEM. SYS.		1055B	CHEMICAL SYSTEM	KITCHEN–MOP SINK
AVB	FURN. WITH CHEM. SYS.		1001	CHEMICAL SYSTEM	SUPP. RM.–3–COMP
AVB	FURN. WITH FAUCET		–	MOP SINK FAUCET	SEE DRAWINGS
VB	FURN. WITH HB		1011	WALL HYDRANT	SEE DRAWINGS
DCV	FURN. WITH HB		1052	YARD HYDRANT	TRASH CORRAL
DCV	FURN. WITH HB		1052	ROOF HYDRANT	ROOF
DCV	WATTS	SD–3	1022	SODA TOWERS AND SPEC. COFFEE	
RPZ	WILKINS	375XL–SXL–AG	1013	INCOMING WATER	SUPPORT ROOM
RPZ	WILKINS	375XL–AG	1013	FILTRATION SYSTEM	SUPPORT ROOM

WATER HEATER SCHEDULE

TAG	MANUFACTURER	MODEL	SIZE GAL.	HEATING TYPE	HEATING MBH	RECOV. 100°F ΔT GPH	ELECTRICAL VOLTS	Ø	Hz	F.L.A.
WH–1	BRADFORD–WHITE	EF–100T–199E–3N	100	GAS	199	239	120	1	60	<20

ACCESSORIES:
1. CONCENTRIC VENT KIT.

NOTES:
1. MINIMUM THERMAL EFFICIENCY 97%

VALVE SCHEDULE

MANUFACTURER	MODEL	TEMP. SETTING	LISTING	SERVES
WATTS	LFMMV	110°F	ASSE 1017,1069,1070	CHEMICAL SYSTEM MIXING
WATTS	LFMMV	104°F	ASSE 1017,1069,1070	LAVS & HAND SINKS MIXING
ZURN	ZW3870XLT	104°F		
WATTS	LFUSG–B	110°F	ASSE 1016, 1070	VEGETABLE PREP. SINK MIXING
B & G	CB–1/2	–	–	RECIRC. SYSTEM BALANCING VALVE
NIBCO	585–70–HC	–	–	CHEMICAL SYSTEM SHUT–OFF
NIBCO	S–FP–600A–LF	–	–	RESTROOM SHUT–OFF
NIBCO	S–FP–600A–LF	–	–	COMBI OVEN WATER SHUT OFF
WATTS	LFFBV–PEX	–	–	COMBI OVEN RO WATER SHUT OFF

INTERCEPTOR SCHEDULE

TAG	DESCRIPTION	MANUFACTURER	MODEL	ACCESSORIES	NOTES
GI–1	EXTERIOR GREASE INTERCEPTOR	SCHIER PRODUCTS	GB–500	6" INLET, 6" OUTLET	1–3
		ZURN – GREEN TURTLE	PROCEPTOR MODEL GMC1300–UPC	6" INLET, 6" OUTLET	1–2, 4

NOTES:
1. SEE GREASE INTERCEPTOR NOTES AND ACCESSORIES ON DRAWING P4.0
2. GREASE INTERCEPTOR IS SIZED FOR CITY SEWER APPLICATIONS ONLY. DO NOT USE FOR SEPTIC FIELDS.
3. FOR SCHIER HYDROMECHANICAL GREASE INTERCEPTOR ORDERING, CONTACT: LEE FLASHER, HUGHES SUPPLY, DIRECT LINE: (407) 509–7626, OR E–MAIL: MCDCOORD@HAJOCA.COM
4. FOR ZURN PROCEPTOR ORDERING, CONTACT HUGHES SUPPLY, DIRECT LINE: (407) 244–7918, OR E–MAIL: MCDCOORD@HAJOCA.COM

PLUMBING FIXTURE SCHEDULE

TAG	DESCRIPTION	MANUFACTURER	MODEL	WATER USE	ACCESSORIES/COMMENTS	
F–1	FAUCET FOR LAV–1 (4)	SLOAN	SF–2150	0.5 GPM (0.08 GAL/10 SEC CYCLE)	FAUCET OPERATION: SENSOR	
		ZURN	ZG6950XL–F–1QS			
		CHICAGO FAUCETS	EQ–R11A–21ABCP			
F–2	FAUCET FOR MS–1	ZURN	Z843M4		FAUCET OPERATION: MANUAL SEE DETAIL 2 ON DRAWING P3.0	5" VINYL HOSE WALL HOOK
		CHICAGO FAUCETS	897–RCF			
FCO	6x6 FLOOR CLEAN OUT	ZURN	Z1400–S2		SEE DRAWINGS FOR PIPE SIZES SEE NOTE 8	
		JAY R. SMITH	4040			
FD–1	6x6 FLOOR DRAIN WITH FUNNEL	ZURN	Z415–SZ1		PIPE SIZE: 3" STRAINER SIZE: 6" NICKEL BRONZE	FUNNEL: ZURN Z329 SEE NOTE 8
		JAY R. SMITH	3510–F25			
FD–2	6x6 FLOOR DRAIN	ZURN	Z415–SZ1		PIPE SIZE: 3" STRAINER SIZE: 6" NICKEL BRONZE	FUNNEL: NONE SEE NOTE 8
		JAY R. SMITH	2005			
FD–3	6x6 FLOOR DRAIN WITH FUNNEL	ZURN	Z415–SZ1		PIPE SIZE: 4" STRAINER SIZE: 6" NICKEL BRONZE	FUNNEL: ZURN Z329 SEE NOTE 8
		JAY R. SMITH	3510–F25			
FD–4	6x6 FLOOR DRAIN	ZURN	Z415–SZ1		PIPE SIZE: 4" STRAINER SIZE: 6" NICKEL BRONZE	FUNNEL: NONE SEE NOTE 8
		JAY R. SMITH	2005			
FS–1	12x12 FLOOR SINK WITH HALF–GRATE	ZURN	ZN1901		PIPE SIZE: 3" DOME STRAINER: ALUMINUM	GRATE: HALF – NICKEL–BRONZE SEE NOTE 8
		JAY R. SMITH	3435			
FS–2	8x8 FLOOR SINK WITH HALF–GRATE	ZURN	ZN1910		PIPE SIZE: 3" DOME STRAINER: ALUMINUM	GRATE: HALF – NICKEL–BRONZE SEE NOTE 8
		JAY R. SMITH	3415			
FS–3	8x8 FLOOR SINK	ZURN	ZN1910		PIPE SIZE: 3" DOME STRAINER: ALUMINUM	GRATE: FULL – NICKEL–BRONZE SEE NOTE 8
		JAY R. SMITH	3415			
HB–1	WALL HYDRANT	WOODFORD	B65		WALL CLAMP: ADJUSTABLE WALL THICKNESS: M/S = 9½" W/W = 13¾"	SEE NOTE 3
		ZURN	Z1320–EZ			
		JAY R. SMITH	5519			
HB–2	YARD HYDRANT	WOODFORD	S4H		SEE NOTES 4 & 9 (NO DRAIN REQUIRED)	
HB–3	ROOF HYDRANT	WOODFORD	RHY2–MS			
HS–1	STAINLESS STEEL HAND SINK	ADVANCE TABCO	7–PS–61		ZURN 6922–XL, CHICAGO FAUCET 116.309402ABT	SEE NOTES 6 & 10
HS–2	STAINLESS STEEL HAND SINK – ADA	ADVANCE TABCO	7–PS–26		ZURN 6920–XL, CHICAGO FAUCET 116.309410ABT	SEE NOTES 6 & 10
LAV–1	LAVATORY	KOHLER	K–2882–0		FAUCET: F–1 TRUEBRO LAVGUARD2 MODEL #102–E–Z CORIAN COUNTER BY G.C.	SEE NOTE 10 SEE DETAIL 3 ON P3.0 SEE NOTE 11 (4)
		SLOAN	SS3021			
MS–1	MOP SINK	FIELD FABRICATED	RECESSED – FLOOR (24x24x12)		FAUCET: F–2 INCLUDES HOSE, HOSE BRACKET AND TWO (2) 24"Wx36"H WALL GUARDS SEE DETAIL 2 ON P3.0	
		ADVANCE TABCO	9–OP–24FM			
TD–1	TRENCH DRAIN	ZURN	Z886–DGC		CLASS A STAINLESS STEEL MESH SCREEN GRATE. NO–HUB BOTTOM OUTLET. BOTTOM DOME STRAINER. CLOSED END CAP	
UR–1	ADA WALL–HUNG URINAL	SLOAN	SU–1009	0.125 GPF	FLUSH VALVE: SLOAN SOLIS 8186 ZURN ZTR6203–ULF–LL ¾" I.P.S., 1" TOP SPUD	FLUSH VALVE OPERATION: SENSOR SEE NOTE 2
		ZURN	ZK5755.380.00			
		–	–			
WB–1	WALL BOX FOR WASHING MACHINE	SIOUX CHIEF	696–2313		HAMMER ARRESTERS INCLUDED WITH BOX MOUNTING HEIGHT: 12" A.F.F.	SEE NOTE 7
WB–2	WALL BOX FOR WAREWASHER	SIOUX CHIEF	696–241MF		MOUNTING HEIGHT: 12" A.F.F.	SEE NOTE 7
WC–1	WATER CLOSET	SLOAN	ST–2009	1.28 GPF	FLUSH VALVE: SLOAN SOLIS 8111 ZURN ZTR6200EV–LL 1" I.P.S., 1½" TOP SPUD	FLUSH VALVE OPERATION: SENSOR SEAT: BEMIS MODEL 2155CT
		ZURN	ZK5655.381.00.03.00			
		–	–			
WC–2	ADA WATER CLOSET	SLOAN	ST–2029 ADA	1.28 GPF	FLUSH VALVE: SLOAN SOLIS 8111 ZURN ZTR6200EV–CC–LL 1" I.P.S., 1½" TOP SPUD	FLUSH VALVE OPERATION: SENSOR SEAT: BEMIS MODEL 2155CT
		ZURN	ZK5655.4MC.00.03.00			
		–	–			
–	SOILED DISHTABLE (3–COMPARTMENT SINK)	–	–		ITEM: 151.46	SEE NOTE 7
–	VEGETABLE PREPARATION SINK	–	–		ITEM: 134.02	SEE NOTE 7
–	WAREWASHER	ECOLAB	XL–HTHH–VV		ITEM: 152.09 WALL BOX: WB–2	SEE NOTE 7. TIE ½" HW INTO ECOLAB. SPLIT CW: ½" TO DTV, ¾" TO VAPOR VENT
–	WASHING MACHINE	–	–		ITEM: 223.07 WALL BOX: WB–1	SEE NOTE 7
WHA	WATER–HAMMER ARRESTER	SIOUX CHIEF	SERIES 650		–	SEE SHEET P1.2
	ROOF DRAINS AND ACCESSORIES					
DC–1	OVERFLOW DOWNSPOUT COVER	ZURN	Z199–SS		SEE DRAWINGS FOR PIPE SIZES BIRD SCREEN	SEE NOTE 8
		JAY R. SMITH	1770–BS			
RD–1 THRU RD–4	COMBINATION MAIN ROOF AND OVERFLOW DRAIN	ZURN	Z165		SEE DRAWINGS FOR PIPE SIZES ROOF OPENING: 30"x14"	SEE NOTE 8

NOTES:
1. SEE McDONALD'S PROJECT MANUAL FOR ADDITIONAL MANUFACTURERS
2. PLUMBING CONTRACTOR SHALL COORDINATE WITH G.C. TO PROVIDE BLOCKING FOR PROPER URINAL SUPPORT
3. PLUMBING CONTRACTOR SHALL COORDINATE WITH G.C. TO PROVIDE INTERIOR BLOCKING ON W/W BUILDING FOR WALL CLAMP
4. YARD HYDRANT IS FOR TRASH CORRAL – SEE SITE PLAN FOR LOCATION
5. PLUMBING CONTRACTOR SHALL ROUTE ½" DRAIN PIPE FROM HOSE BIBB TO NEAREST FLOOR DRAIN OR FLOOR SINK
6. PLUMBING CONTRACTOR SHALL COORDINATE WITH G.C. TO PROVIDE BLOCKING FOR PROPER SINK SUPPORT
7. SEE KITCHEN DRAWINGS FOR ADDITIONAL INFORMATION – PLUMBING CONTRACTOR SHALL COORDINATE INSTALLATION WITH K.E.S.
8. PLUMBING CONTRACTOR SHALL SPECIFY CONNECTION MATERIAL/TYPE WHEN ORDERING
9. PLUMBING CONTRACTOR SHALL SPECIFY BURY DEPTH WHEN ORDERING
10. PLUMBING CONTRACTOR SHALL PROVIDE GRID DRAIN, P–TRAP AND VALVE STOPS FOR ALL SINKS & LAVS
11. FOR ALTERNATIVE LAVATORY OPTIONS, SUCH AS MOLDED SINKS OR DECK MOUNTED HAND DRYER, PLEASE CONTACT USRD OR HUGHES DIRECTLY.

TO ORDER PLUMBING FIXTURES, CONTACT HUGHES SUPPLY:
E–MAIL: MCDCOORD@HUGHESSUPPLY.COM
OR MCDCOORD@HAJOCA.COM

LINGLE DESIGN GROUP INC
158 WEST MAIN STREET
LENA, IL 61048
815.369.9155
1764 BLAKE ST
DENVER, CO 8020
303.974.5873
WWW.LINGLEDESIGN.COM

WCW Engineers, Inc.
760 Creel Drive
Wood Dale, Illinois 60191
Tel 630/595-8800
Fax 630/595-8818
www.WCWengineers.com

© ALL DRAWINGS AND WRITTEN MATERIAL CONTAINED HEREIN ARE THE PROPERTY OF THE LINGLE DESIGN GROUP, INC. THEY MAY NOT BE REVISED, COPIED, REUSED, OR DISCLOSED IN ANY MANNER WITHOUT WRITTEN AUTHORIZATION FROM THE ARCHITECT.

LICENSE EXPIRATION: APR 30, 2027

JEFF A. KLINKER LICENSED PE31503 KANSAS PROFESSIONAL ENGINEER

DATE ISSUED: AUG 2, 2026

STATE #: 150405
NATIONAL #: 44936
PROJECT #: 25-079
DRAWN BY: SC
CHECKED BY: JK

DATE:
10/15/25 - PERMIT / BID SET

REVISIONS
1 11/12/25 - QC COMMENTS/PROTO UPDATE
2 02/12/26 - CITY COMMENTS
3 03/10/26 - DECOR UPDATE
4 08/02/26 - OWNER COMMENTS / PROTOTYPE UPDATES

CLIENT
McDonald's USA, LLC

PROTOTYPE
BB20 4590 MS-HB
ISSUE DATE 08/27/25

ADDRESS
2320 METROPOLITAN AVE
KANSAS CITY, KS 66106

SHEET TITLE
SCHEDULES

SHEET NUMBER:
P4.1

THE PURPOSE OF THIS SHEET IS TO PROVIDE A CHECKLIST AND VISUAL GUIDE SO THE INSTALLING EC CAN VERIFY THE WORK IS IN COMPLIANCE WITH MCDONALD'S SPECIFICATIONS THAT ARE CRITICAL TO THE PROPER FUNCTIONING OF OUR POINT OF SALE (POS) COMPUTER SYSTEMS.

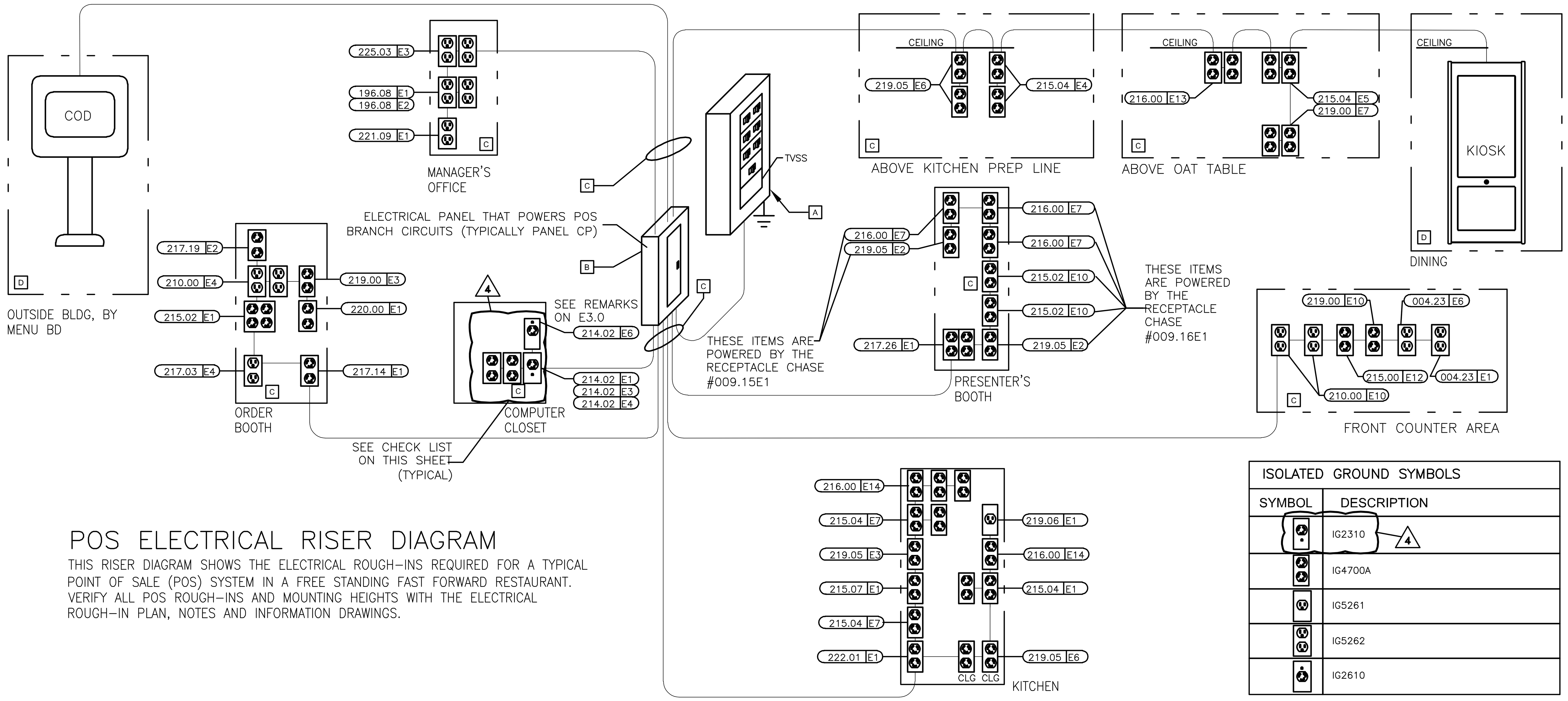

ISOLATED GROUND SYMBOLS	
SYMBOL	DESCRIPTION
	IG2310 (4)
	IG4700A
	IG5261
	IG5262
	IG2610

POS ELECTRICAL RISER DIAGRAM

THIS RISER DIAGRAM SHOWS THE ELECTRICAL ROUGH–INS REQUIRED FOR A TYPICAL POINT OF SALE (POS) SYSTEM IN A FREE STANDING FAST FORWARD RESTAURANT. VERIFY ALL POS ROUGH–INS AND MOUNTING HEIGHTS WITH THE ELECTRICAL ROUGH–IN PLAN, NOTES AND INFORMATION DRAWINGS.

LOW VOLTAGE CABLE MANAGEMENT SPECIFICATION

GENERAL/MATERIALS

1. THE GC OR EC SHALL FURNISH AND INSTALL A COMPLETE LOW VOLTAGE CABLE MANAGEMENT SYSTEM UTILIZING CADDY–ERICO TYPE CAT–32 J–HOOK SUPPORTS (2–INCH DIAMETER LOOP MINIMUM). ALL J–HOOKS SHALL;
   - HAVE A MINIMUM BEARING SURFACE OF 1⅜",
   - HAVE FLARED EDGES TO PREVENT DAMAGE TO HIGH PERFORMANCE CABLES,
   - HAVE AN ELECTRO–GALVANIZED FINISH,
   - HAVE 3/8" WIDE CABLE RETAINING STRAPS,
   - BE UL LISTED AND LABELED,
   - BEAR THE UL SYMBOL MARKING ON THE PART FOR IDENTIFICATION
   - BE INSTALLED PER THE MANUFACTURERS INSTALLATION INSTRUCTIONS.
2. THE ENTIRE INSTALLATION SHALL BE IN COMPLIANCE WITH THE NATIONAL ELECTRICAL CODE (NEC), NEC SECTION 800, BICSI STANDARDS 568 & 569, ALL APPLICABLE NATIONAL, STATE, LOCAL, AND SAFETY CODES, AND McDONALD'S SPECIFICATIONS.

INSTALLATION

1. LOW VOLTAGE J–HOOK CABLE PATHWAY (FOR POS CABLING SYSTEM) SHALL BE PROVIDED FROM THE MANAGERS OFFICE (OR COMPUTER CLOSET) DATA CONDUIT STUB–UP LOCATION TO THE FOLLOWING DATA CONDUIT STUB–UP LOCATIONS (AS APPLICABLE):
   - FRONT COUNTER.
   - PRESENTERS BOOTH.
   - CASHIERS BOOTH.
   - THIRD DRIVE–THRU WINDOW(IF PRESENT).
   - CREW ROOM.
   - VALENCE WALL.
   - REMOTE ORDERING STATIONS.
   - NETPOP TELEPHONE PANEL LOCATION.
   - KIOSK
   - DIGITAL MERCHANDISER

   CABLE SUPPORTS SHALL BE PROVIDED WITHIN 24 INCHES OF THESE STUB–UP LOCATIONS. ALL STUB–UP CONDUITS SHALL BE PROVIDED WITH AN INSULATED BUSHING TO PROTECT CABLES DURING INSTALLATION.
2. THE LOCATION AND ROUTING OF THE LOW VOLTAGE CABLE MANAGEMENT SYSTEM SHALL BE COORDINATED WITH ALL OTHER CONSTRUCTION TRADES PRIOR TO INSTALLATION TO AVOID CONFLICTS WITH THE OTHER TRADES FINAL INSTALLATIONS, BOTH BEFORE AND AFTER THE CABLE MANAGEMENT SYSTEM AND THE POS CABLING ARE INSTALLED. FINAL INSTALLATION LOCATION SHALL BE READILY ACCESSIBLE TO ALLOW FOR EASE IN INSTALLATION OF THE POS CABLING BY THE POS VENDOR'S INSTALLER.
3. LOW VOLTAGE J–HOOK CABLE SUPPORTS AND APPURTENANCES SHALL BE FASTENED TO THE BUILDING STRUCTURAL AND/OR FRAMING MEMBERS. LOW VOLTAGE J–HOOK CABLE SUPPORTS SHALL NOT BE FASTENED OR UTILIZE THE CEILING GRID SUSPENSION WIRES OR T–BAR GRID FOR INSTALLATION. CONTRACTOR SHALL PROVIDE ALL NECESSARY BRACKETS, HANGERS, RODS, CLAMPS, FLANGES, SUPPORTS, ETC. FOR A COMPLETE AND FULLY FUNCTIONAL SYSTEM. THE INSTALLATION OF THE LOW–VOLTAGE CABLE MANAGEMENT SYSTEM SHALL BE DONE SO THAT THE ROUTING OF THE CABLES IS PARALLEL TO AND/OR PERPENDICULAR TO FRAMING AND STRUCTURAL BUILDING MEMBERS.
4. LOW VOLTAGE J–HOOK **CABLE SUPPORTS** SHALL BE INSTALLED A MAXIMUM OF 36 INCHES APART. AT TRANSITION LOCATIONS, THE CONTRACTOR SHALL PROVIDE ADDITIONAL J–HOOKS TO ALLOW FOR A MINIMUM ONE–FOOT RADIUS BEND AND FOR ADDITIONAL CABLE SUPPORT AT THESE TRANSITION POINTS.
5. TO AVOID **ELECTROMAGNETIC INTERFERENCE** (EMI), ALL PATHWAYS SHALL PROVIDE A MINIMUM CLEARANCE OF 4 FEET (1.2 METERS) FROM MOTORS AND TRANSFORMERS AND A MINIMUM CLEARANCE OF 1 FOOT (0.3 METERS) FROM CONDUIT AND CABLES UTILIZED FOR ELECTRICAL POWER DISTRIBUTION, AND OTHER NON–POS LOW VOLTAGE CONDUCTORS.
6. ANY **CEILING TILES** IN THE AREA WHERE THE LOW–VOLTAGE CABLE MANAGEMENT SYSTEM IS LOCATED SHALL NOT BE INSTALLED UNTIL THE POS VENDOR'S CONTRACTOR COMPLETES THE INSTALLATION OF ALL POS CABLING.
7. ALL NON–POS LOW VOLTAGE CABLING SHALL BE INSTALLED IN A SEPARATE CABLE MANAGEMENT SYSTEM INDEPENDENT OF THE LOW–VOLTAGE CABLE MANAGEMENT SYSTEM UTILIZED FOR THE POS CABLING.
8. THE POS INSTALLER SHALL BE RESPONSIBLE TO FURNISH AND INSTALL ALL LOW VOLTAGE CABLING REQUIRED FOR THE COMPLETE AND FULLY FUNCTIONAL OPERATION OF THE POS SYSTEM. ALL POS CABLING SHALL BE INSTALLED WITHIN THE LOW–VOLTAGE CABLE MANAGEMENT SYSTEM.
9. GENERAL CONTRACTOR TO COORDINATE WITH POS INSTALLER. POS INSTALLER TO PERFORM POS CABLE INSTALLATION PRIOR TO CLOSING OF WALLS AND CEILING.

ELECTRICAL POS CERTIFICATION

AS OF THE DATE BELOW, I HEREBY CERTIFY THAT ALL ELECTRICAL WORK, ELECTRICAL SERVICE AND ELECTRICAL SYSTEMS, MATERIALS AND LABOR RELATED TO THE POS ELECTRICAL INSTALLATION IN WHICH THE UNDERSIGNED ARE DIRECTLY OR INDIRECTLY RESPONSIBLE HAVE BEEN PROPERLY INSTALLED IN FULL COMPLIANCE WITH ALL CONSTRUCTION DOCUMENTS AND ALL NFPA, BUILDING, ELECTRICAL AND OTHER APPLICABLE CODES, ALONG WITH ALL OF THE REQUIREMENTS OUTLINED ON THIS DRAWING. I FURTHER CERTIFY THAT THE ELECTRIC SERVICE POWERING THE POS SYSTEM HAS BEEN PROPERLY INSTALLED BY A QUALIFIED ELECTRICIAN. SKILLED, KNOWLEDGEABLE AND TRAINED TO INSTALL ALL THE REQUIRED ELECTRICAL DISTRIBUTION COMPONENTS NECESSARY TO POWER THE POINT OF SALE (POS) SYSTEM.

GENERAL CONTRACTOR: ______________________

BY: ______________________

DATE: ______________________

ELECTRICAL CONTRACTOR: ______________________

BY: ______________________

DATE: ______________________

START HERE

A VISUALLY INSPECT THE MAIN ELECTRICAL PANEL (MDP)

YES NO N/A

☐ ☐ ☐ 1. IS AN **EQUIPMENT GROUND BAR** INSTALLED SUCH THAT IT IS ELECTRICALLY **CONNECTED** TO THE PANEL?

☐ ☐ ☐ 2. DO ALL NEUTRAL CONDUCTORS TERMINATE ONLY TO THE NEUTRAL BAR?

☐ ☐ ☐ 3. DO ALL EQUIPMENT GROUND CONDUCTORS TERMINATE ONLY TO THE EQUIPMENT GROUND BAR?

☐ ☐ ☐ 4. DOES THE ISOLATED GROUND CONDUCTOR (GREEN W/YELLOW STRIPE) TERMINATE ON THE EQUIPMENT GROUND BAR?

☐ ☐ ☐ 5. IS THERE AN APPROPRIATE ELECTRICAL CONNECTION (BOND) BETWEEN THE NEUTRAL BAR AND THE EQUIPMENT GROUND BAR?

☐ ☐ ☐ 6. DOES THE GROUNDING SYSTEM COMPLY WITH MCDONALD'S "BUILDING ELECTRICAL GROUNDING DETAIL"?

☐ ☐ ☐ 7. IS A SURGE PROTECTOR INSTALLED THAT COMPLIES WITH MCDONALD'S "TVSS INSTALLATION GUIDE" OR DETAIL?

☐ ☐ ☐ 8. ARE ALL ELECTRICAL CONNECTIONS (WIRING & BUSING) PROPERLY TIGHTENED?

☐ ☐ ☐ 9. ARE ALL CIRCUIT BREAKERS CLEARLY LABELED?

B VISUALLY INSPECT THE PANEL "CP" THAT POWERS POS

YES NO N/A

☐ ☐ ☐ 1. IS AN **EQUIPMENT GROUND BAR** INSTALLED SUCH THAT IT IS ELECTRICALLY **CONNECTED** TO THE PANEL?

☐ ☐ ☐ 2. IS AN **ISOLATED GROUND BAR** INSTALLED SUCH THAT IT IS ELECTRICALLY **INSULATED** FROM THE PANEL?

☐ ☐ ☐ 3. DO ALL NEUTRAL CONDUCTORS TERMINATE ONLY TO THE NEUTRAL BAR?

☐ ☐ ☐ 4. DO ALL EQUIPMENT GROUND CONDUCTORS TERMINATE ONLY TO THE EQUIPMENT GROUND BAR?

☐ ☐ ☐ 5. DO ALL ISOLATED GROUND CONDUCTORS (GREEN W/YELLOW STRIPE) TERMINATE ONLY TO THE ISOLATED GROUND BAR?

☐ ☐ ☐ 6. ARE ALL ELECTRICAL CONNECTIONS (WIRING & BUSING) PROPERLY TIGHTENED?

☐ ☐ ☐ 7. ARE ALL POS AND COD CIRCUIT BREAKERS ON THE SAME PANEL?

☐ ☐ ☐ 8. ARE ALL CIRCUIT BREAKERS CLEARLY LABELED?

☐ ☐ ☐ 9. DO ALL POS & COD CIRCUIT BREAKERS HAVE A LOCKING MECHANISM ON THEIR HANDLES TO PREVENT THEM FROM BEING SHUT OFF BY MISTAKE?

☐ ☐ ☐ 10. DOES THE FEEDER CIRCUIT FOR THIS SUBPANEL CONTAIN PHASE, NEUTRAL ONE EQUIPMENT GROUND AND ONE ISOLATED GROUND CONDUCTORS THAT ARE PROPERLY TERMINATED (SEE POS & COD ISO GND/DED CKT DETAIL)?

VISUALLY INSPECT ALL REMAINING ELECTRICAL SUBPANELS

YES NO N/A

☐ ☐ ☐ 1. IS AN **EQUIPMENT GROUND BAR** INSTALLED SUCH THAT IT IS ELECTRICALLY **CONNECTED** TO THE PANEL?

☐ ☐ ☐ 2. DO ALL NEUTRAL CONDUCTORS TERMINATE ONLY TO THE NEUTRAL BAR?

☐ ☐ ☐ 3. DO ALL EQUIPMENT GROUND CONDUCTORS TERMINATE ONLY TO THE EQUIPMENT GROUND BAR?

☐ ☐ ☐ 4. ARE ALL ELECTRICAL CONNECTIONS (WIRING & BUSING) PROPERLY TIGHTENED?

☐ ☐ ☐ 5. ARE ALL CIRCUIT BREAKERS CLEARLY LABELED?

☐ ☐ ☐ 6. DOES THE FEEDER CIRCUIT FOR THIS SUBPANEL CONTAIN PHASE, NEUTRAL AND ONE EQUIPMENT GROUND CONDUCTORS THAT ARE PROPERLY TERMINATED? (SEE BUILDING ELECTRICAL GROUNDING DETAIL)

C VISUALLY INSPECT THE POS BRANCH CIRCUITS

YES NO N/A

☐ ☐ ☐ 1. ARE THE POS BRANCH CIRCUITS ROUTED IN THEIR OWN CONDUIT BY THEMSELVES?

☐ ☐ ☐ 2. IF THE POS BRANCH CIRCUIT IS ROUTED ABOVE GRADE, IS IT IN A METALLIC CONDUIT?

☐ ☐ ☐ 3. DOES EACH POS BRANCH CIRCUIT CONTAIN: ONE PHASE (BLACK COLORED INSULATION) ONE NEUTRAL (WHITE COLORED INSULATION) ONE EQUIPMENT GROUND (GREEN COLORED INSULATION) ONE ISOLATED GROUND (GREEN W/YELLOW STRIPE COLORED INSULATION).

☐ ☐ ☐ 4. DO ALL POS BRANCH CIRCUITS TERMINATE AT EITHER AN IG4700, IG4710, IG5261, IG5262 RECEPTACLES OR ANY COMBINATION OF THESE?

☐ ☐ ☐ 5. ARE ALL ELECTRICAL TERMINATIONS TO IG RECEPTACLES MADE WITH SOLID #12 AWG WIRE CAPTURED AROUND THE SCREW BARREL AND SUITABLY TIGHTENED?

☐ ☐ ☐ 6. ARE ALL BRANCH CIRCUIT CONNECTIONS PROPERLY TIGHTENED?

☐ ☐ ☐ 7. ARE THE CORRECT AMOUNT AND TYPE OF IG RECEPTACLES PROVIDED AS SHOWN IN THE ELECTRICAL ROUGH–IN PLAN, NOTES AND INFORMATION?

☐ ☐ ☐ 8. DO ALL POS RECEPTACLES HAVE ORANGE "COMPUTER ONLY" COVERPLATES?

☐ ☐ ☐ 9. DO ALL POS BRANCH CIRCUITS COMPLY WITH THE "POS & COD ISOLATED GROUND/DEDICATED CIRCUIT DETAIL?

D VISUALLY INSPECT THE POS BRANCH CIRCUIT FOR THE COD & KIOSK

YES NO N/A

☐ ☐ ☐ 1. ARE THE COD AND KIOSK BRANCH CIRCUITS ROUTED IN THEIR OWN CONDUIT BY THEMSELVES?

☐ ☐ ☐ 2. DOES EACH COD AND KIOSK BRANCH CIRCUIT CONTAIN;
- ONE PHASE (BLACK COLORED INSULATION),
- ONE NEUTRAL (WHITE COLORED INSULATION),
- ONE EQUIPMENT GROUND (GREEN COLORED INSULATION),
- ONE ISOLATED GROUND (GREEN W/YELLOW STRIPE COLORED INSULATION).

☐ ☐ ☐ 3. ARE THE COD(S) AND KIOSK(S) POWERED FROM THE SAME PANEL AS THE POS?

☐ ☐ ☐ 4. DO THE BREAKERS FOR THE COD(S) AND KIOSK(S) HAVE A LOCKING MECHANISM ON THEIR HANDLES THAT WILL PREVENT IT FROM BEING SHUT OFF?

☐ ☐ ☐ 5. DO THE COD BRANCH CIRCUIT(S) COMPLY WITH THE "POS & COD ISOLATED GROUND/DEDICATED CIRCUIT DETAIL?

ARE ALL BOXES CHECKED "YES"?

NO

REWORK ELECTRICAL SYSTEM TO BRING INTO COMPLIANCE WITH MCDONALD'S SPECIFICATIONS

YES

ALL WORK IS NOT CONSIDERED TO MEET MCDONALD'S SPECIFICATIONS UNTIL THE INSTALLED ELECTRICAL SYSTEM SUPPORTS A "YES" ANSWER FOR ALL QUESTIONS ASKED.

AS PART OF THIS PROCESS, THE EC AND THE GC WILL BE REQUIRED TO SIGN THE ELECTRICAL CERTIFICATION DOCUMENT INDICATING THAT THE INSTALLED ELECTRICAL SYSTEM MEETS MCDONALD'S SPECIFICATIONS.

NOTICE:

CHANGES SHALL NOT BE MADE TO THE POS ELECTRICAL SYSTEM AFTER THE POS EQUIPMENT HAS BEEN INSTALLED WITHOUT FIRST NOTIFYING THE POS VENDOR.

IF CHANGES ARE MADE TO THE POS ELECTRICAL SYSTEM **AFTER** THE CERTIFICATION PROCESS HAS BEEN COMPLETED, THEN A SYSTEM RE–CERTIFICATION SHALL BE REQUIRED.

FINISHED

ELECTRICAL DRAWING INDEX

E1.0 POS RISER DIAGRAM
E1.1 ROUGH–IN FLOOR PLAN
E2.0 LIGHTING PLAN
E2.1 ELECTRICAL ROOF PLAN
E3.0 ROUGH–IN SCHEDULE
E3.1 NOTES & DETAILS
E3.2 INTERLOCK DIAGRAMS
E4.0 WIRING DETAILS
E4.1 LIGHTING CONTROLS
E4.2 PANEL SCHEDULES & ONE LINE

LINGLE DESIGN GROUP INC
158 WEST MAIN STREET
LENA, IL 61048
815.369.9155
1764 BLAKE ST
DENVER, CO 8020
303.974.5873
WWW.LINGLEDESIGN.COM

DICKERSON ENGINEERING, INC.
Professional Electrical Engineers
3343 NORTH RIDGE AVENUE
ARLINGTON HEIGHTS, IL 60004
TEL (847) 966-0290
WWW.DEI-PE.COM
ILLINOIS REGISTERED DESIGN FIRM # 184-000949

© ALL DRAWINGS AND WRITTEN MATERIAL CONTAINED HEREIN ARE THE PROPERTY OF THE LINGLE DESIGN GROUP, INC. THEY MAY NOT BE REVISED, COPIED, REUSED, OR DISCLOSED IN ANY MANNER WITHOUT WRITTEN AUTHORIZATION FROM THE ARCHITECT.

AUGUST HERNANDEZ LICENSED 27273 KANSAS PROFESSIONAL ENGINEER

SIGNATURE

07/28/2026 DATE — 04/30/2028 EXPIRATION DATE

COVERING ELECTRICAL DESIGN

STATE ID: 150405

PROJECT #: 25-079

NATIONAL #: 44936

DRAWN BY: DEI

CHECKED BY: AH/RS

DATE:
10/15/2025 - PERMIT / BID SET

REVISIONS

1. 11/12/25 - QC COMMENTS/PROTO UPDATE
2. 02/23/2026 - CITY COMMENTS
3. 03/10/2026 - DECOR UPDATE
4. 08/02/26 - OWNER COMMENTS / PROTOTYPE UPDATES

CLIENT
McDonald's USA, LLC

PROTOTYPE
BB20 4590 MS-HB
ISSUE DATE 08/27/25

ADDRESS
2320 METROPOLITAN AVE
KANSAS CITY, KS 66106

SHEET TITLE
POS RISER DIAGRAM

SHEET NUMBER:
E1.0

TRASH CORRAL POWER:
3/4"C-4#10 & 1#10 GND TO A 30A-2P AND A 20A-1P CB IN PANEL AP-2 FOR TRASH COMPACTOR AND WP GFCI DCO. PROVIDE 30A-2P NF DISCONNECT FOR TRASH COMPACTOR. VERIFY EXACT LOCATION AND ALL REQUIREMENTS OF TRASH CORRAL IN FIELD.

COMPLETE INSTALLATION OF THE SECONDARY DETECTOR LOOPS & C.O.D. COUNDUIT FOR CURRENT & ANY FUTURE D/T EQUIPMENT. IF SECONDARY D/T IS NOT INSTALLED, EXTEND INTO LANDSCAPED AREA BEHIND BUILDING, STUB, & CAP FOR FUTURE ACCESS.

EXTEND 2" CONDUIT TO DT CAMERA MOUNTED ON LIGHT POLE OR OTHER POLE. COORDINATE STUB-UP LOCATION WITH ACM AND DT CAMERA INSTALLER

EXTEND CONDUITS TO OUTDOOR MENU BOARDS FOR DATA CONNECTIONS. REFER TO DRIVE THRU DIAGRAM ON SHEET E4.0

(2) 1-1/2" CONDUIT TO SECONDARY SPEAKER FOR DATA & LOOP DETECTOR SEE CIVIL DRAWINGS 217.10|E1

(2) 1-1/2" CONDUIT TO PRIMARY SPEAKER FOR DATA & LOOP DETECTOR SEE CIVIL DRAWINGS 217.10|E1

GC/EC SHALL COORDINATE LOCATION AND ALL REQUIREMENTS OF CT & METER CABINET WITH LOCAL UTILITY COMPANY. CT & METER CABINET SHALL NOT BE INSTALLED ON D/T SIDE OF BUILDING. GC SHALL PAINT TO MATCH BUILDING COLOR.

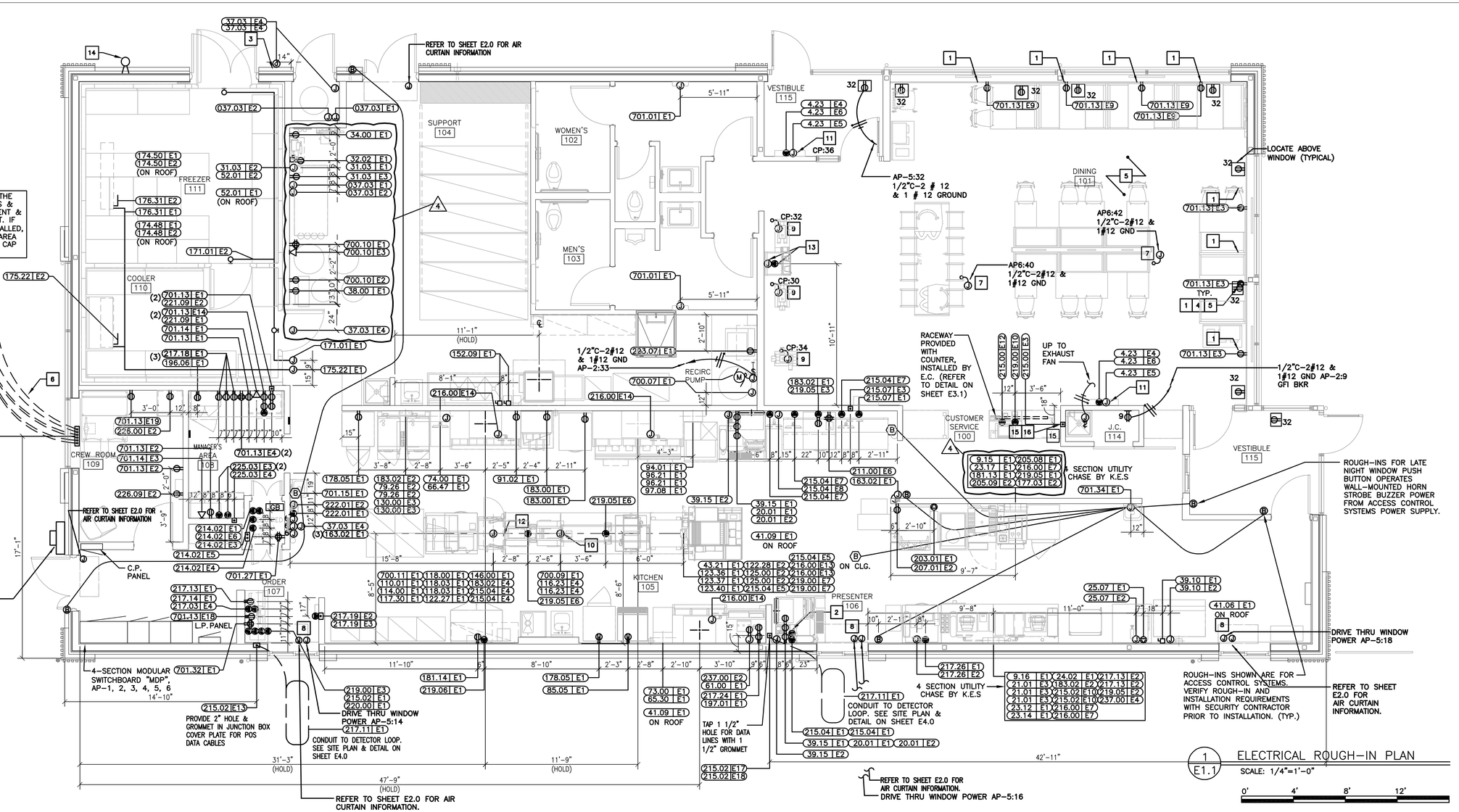

1 E1.1 ELECTRICAL ROUGH-IN PLAN
SCALE: 1/4"=1'-0"
0' 4' 8' 12'

SYMBOLS AND ABBREVIATIONS

SYMBOL	DESCRIPTION	SYMBOL	DESCRIPTION
	SINGLE POLE SWITCH, 3W=THREE WAY SWITCH, K=KEYED SWITCHED, VS=VACANCY SENSOR	(B)	BUZZER
T	MANUAL SWITCH (T=THERMAL OVERLOADS)	(B)	BUTTON FOR BUZZER
T	TRANSFORMER		PULLBOX
	JB WITH DUPLEX CONVENIENCE OUTLET (FLUSH WITH CEILING)		PANELBOARD
	JB WITH SINGLE CONVENIENCE OUTLET		CIRCUIT BREAKER
	JB WITH DUPLEX CONVENIENCE OUTLET	A	AMPERES
	JB WITH TWO DUPLEX CONVENIENCE OUTLETS	ACM	AREA CONSTRUCTION MANAGER
	JB WITH SPECIAL PURPOSE OUTLET	AFF	ABOVE FINISHED FLOOR
	JB WITH ISOLATED GROUND OUTLET (I) =IG4710, (V) =IG5261, (I) (I) =IG4700A, (V) (V) =IG5262	C	CONDUIT
		CCT	CIRCUIT
	INTERCOM STATION W/ 3/4"C- TO MAIN STATION	EC	ELECTRICAL CONTRACTOR
	TELEPHONE JACK	GC	GENERAL CONTRACTOR
J	JUNCTION BOX - WALL OR CEILING MOUNTED	GFI/GFCI	GROUND FAULT CIRCUIT INTERRUPTER
	DISCONNECT SWITCH	GND	GROUND
S	STUB UP THRU ROOF	IG	ISOLATED GROUND
T	THERMOSTAT SENSOR W/ 1/2"C- UP TO CEILING SPACE	JB	JUNCTION BOX
M	MOTOR CONNECTION	KES	KITCHEN EQUIPMENT SUPPLIER
	CONDUIT RUN CONCEALED IN CEILING OR WALLS	MLO	MAIN LUGS ONLY
	CONDUIT RUN IN FLOOR SLAB	WP	WEATHERPROOF
	HOT (SHORT), NEUTRAL (LONG), EQUIP GRD (LONG WITH DOT), & & 'X' DENOTES ISOLATED GRD	CO	CARBON MONOXIDE SENSOR
	J-BOX WITH FINAL EQUIPMENT CONNECTION	GB	GROUND BUS TERMINAL
OS	CEILING MOUNTED OCCUPANCY SENSOR	DS	DAYLIGHT SENSOR

ADT ROUGH-IN NOTES

1. COORDINATE EXACT INSTALLATION REQUIREMENTS WITH ADT PRIOR TO INSTALLATION TEL. 800-417-8238
2. EC SHALL PROVIDE A 2 GANG 3 23/32" X 3 23/32" X 3 1/2"D JUNCTION BOX AT DOOR FOR INSTALLATION OF DOOR ALARM UNIT. STUB 1/2"C ABOVE CEILING FROM JUNCTION BOX. PROVIDE 1/2"C FROM J-BOX TO DOOR MAGNETIC SWITCH LOCATION.
3. EC SHALL PROVIDE 4" X 4" JUNCTION BOX ABOVE CEILING FOR INSTALLATION OF LOW VOLTAGE TRANSFORMER. VERIFY EXACT LOCATION WITH ADT PRIOR TO INSTALLATION. PROVIDE 1/2"C-2#12 TO LOCKOUT TYPE CB IN PANEL LP-1.

GENERAL NOTES

1. SEE SHEET E3.0 FOR PANEL & CIRCUIT BREAKER ASSIGNMENT, VOLT/PH, FLA, BREAKER SIZE, COND/WIRE, RECEPTACLE TYPE, HEIGHT ABOVE FINISHED FLOOR, REQUIREMENTS & REMARKS FOR ALL ELECTRICAL EQUIPMENT.
2. SEE LOW VOLTAGE CABLE MANAGEMENT SPECIFICATION ON SHEET E1.0 FOR POS, DATA, AND SOUND SYSTEM REQUIREMENTS.
3. PROVIDE GFCI BREAKER FOR ALL SINGLE PHASE RECEPTACLES RATED 150 VOLTS TO GROUND OR LESS, 50AS OR LESS; AND THREE-PHASE RECEPTACLES RATED 150 VOLTS OR LESS, 100 AMPS OR LESS INSTALLED IN BATHROOMS, KITCHEN, OR WITHIN 6 FEET OF ANY SINK.

KEY NOTES

1. TAMPER RESISTANT GFCI DUPLEX RECEPTACLE IN PUBLIC AREAS. EC SHALL PROVIDE HUBBELL GFTRST* ("*": AL=ALMOND, BK=BLACK, -=BROWN, GY=GRAY, I=IVORY, LA=LIGHT ALMOND, R=RED, W=WHITE). SPECIFIED RECEPTACLE BECOMES DE-ENERGIZED UPON FAILURE OF GFCI DEVICE. NO SUBSTITUTIONS.(TYPICAL)
2. SEE POS ELECTRICAL RISER DIAGRAM ON SHEET E1.0. (TYPICAL)

KEY NOTES

3. EC TO FURNISH AND INSTALL A FLUSH MOUNTED JUNCTION BOX WITH WEATHERPROOF GASKET AND OUTDOOR WEATHERPROOF, 24 VOLT CO2 HORN/STROBE UNIT COMPATIBLE WITH CO2 ALARM SYSTEM - EDWARDS GENESIS WGAVRN OR APPROVED EQUAL. STROBE SHALL HAVE AN AMBER COVER AND MEET ALL LOCAL REGULATORY REQUIREMENTS FOR SPECIFICATIONS AND INSTALLATION. PROVIDE A 3/4" CONDUIT STUB-IN INTO BUILDING WITH THERMOPLASTIC BUSHING FROM WEATHERPROOF BACKBOX. PROVIDE FINAL WIRING TERMINATIONS AT HORN/STROBE UNIT AND THEN PROVIDE 36 INCHES OF PIGTAIL WIRING FROM HORN/STROBE INTO THE BUILDING AND NEATLY COIL FOR FINAL CONNECTION. FINAL WIRING CONNECTION FROM OUTDOOR HORN/STROBE PIGTAILS TO THE CO2 ALARM SYSTEM INSTALLATION TO BE PROVIDED BY BEVERAGE INSTALLER.
4. PER THE AMERICAN WITH DISABILITIES ACT ACCESSIBILITY GUIDELINES (ADAAG), A MINIMUM OF ONE (1) ADA COMPLIANT ELECTRICAL RECEPTACLE SHALL BE INSTALLED AT AN ACCESSIBLE TABLE. GC/EC SHALL REFERENCE FINAL DECOR PLANS AND PROVIDE RECEPTACLES AS NECESSARY FOR COMPLIANCE. (TYPICAL)
5. COORDINATE LOCATION OF RECEPTACLES SO THAT RECEPTACLES ARE LOCATED ON FULL HEIGHT WALLS PER THE DECOR PLAN. STUB UP AND CIRCUIT IN HALF WALL FOR RECEPTACLES NOT ON FULL HEIGHT WALLS, CONFIRM FINAL LOCATIONS WITH DECOR DRAWINGS PRIOR TO ROUGH-IN.
6. IF MOUNTED TO A LIGHTING POLE, DT CAMERA SHALL ONLY BE INSTALLED ON A POLE WITH MAXIMUM OF (2) LIGHTING HEADS. PROVIDE ISOLATION OF DT CAMERA MOUNTING HARDWARE AND POLE TO PREVENT BI-METALLIC OR GALVANIC CORROSION.
7. E.C. TO PROVIDE AN ALLOWANCE IN BID TO PROVIDE TWO(2) FLEXIBLE POWER CONNECTIONS FOR POWER TO FURNITURE/ FAMILY EXPERIENCE ELEMENTS AS PART OF THE DECOR PACKAGE. E.C. SHALL VERIFY EXACT LOCATIONS IN FIELD AND WITH DECOR DRAWINGS. PROVIDE ALL NECESSARY MATERIALS AND LABOR FOR A COMPLETE AND FULLY NEC CODE COMPLIANT INSTALLATION. ALL COMPONENTS SHALL BE FED FROM A GFCI TYPE CIRCUIT BREAKER AND BRANCH CIRCUIT SHALL CONTAIN TWO PATHS OF GROUNDING (CONDUIT BODY AND AN INSULATED GROUNDING CONDUCTOR) TO COMPLY WITH McDONALD'S GROUNDING STANDARDS.
8. DRIVE THRU WINDOW POWER, CONFIRM REQUIREMENTS WITH MANUFACTURER DRAWINGS. 1/2"C.-2 # 12 & 1 # 12 GROUND COORDINATE EXACT LOCATION IN FIELD

KEY NOTES

9. PROVIDE POWER FOR CONNECTION TO SELF ORDER KIOSKS. COORDINATE EXACT LOCATION OF KIOSKS WITH DECOR DRAWINGS. PROVIDE 2#12, 1#12 GRD., & 1#12 ISOLATED GROUND ON A 20A DEDICATED CIRCUIT FED FROM THE CP PANEL FOR EVERY KIOSK.
10. VERIFY DROP CORDS AND RECEPTACLES DO NOT FALL BELOW HEIGHTS LISTED ON E3.0 ELECTRICAL SCHEDULE. RECEPTACLES SHOULD BE LOCATED AT HEIGHTS TO AVOID CONTACT WITH HOT APPLIANCES.
11. PROVIDE POWER AND DATA ROUGH-INS FOR DIGITAL MERCHANDISER. EXTEND CIRCUIT TO THIS LOCATION FROM FRONT COUNTER MERCHANDISER IN SERVICE AREA. EXTEND J-HOOKS FROM SERVICE AREA FOR DATA CABLES. REFER TO 3/E3.1.
12. EC TO INSTALL DROP CORDS JUSTIFIED TO THE DRIVE THRU SIDE OF THE BUILDING.
13. PROVIDE POWER AND DATA ROUGH-INS FOR CASH HANDLERS REFER TO 4/E3.1 FOR MORE INFORMATION. COORDINATE EXACT LOCATION WITH DECOR DRAWINGS.
14. COORDINATE EXACT LOCATION OF ACCESS POINT IN FIELD WITH ACCENTURE. ELECTRICAL CONTRACTOR TO PROVIDE A WALL PENETRATION INTO INTERIOR CEILING AT 11'-0". PROVIDE # 8 GROUND CONDUCTOR FROM BUILDING GROUNDING SYSTEM TO BUILDING EXTERIOR WIRELESS ACCESS POINT. FINAL CONNECTIONS TO ACCESS POINT BY ACCENTURE.
15. CONTRACTOR TO PUNCH HOLES IN SERVICE POD FOR CABLE AND CONDUIT ROUTING. UTILIZE BUSHINGS PROVIDE WITH SERVICE POD TO PROTECT CABLES.

LINGLE DESIGN GROUP INC
158 WEST MAIN STREET
LENA, IL 61048
815.369.9155
1764 BLAKE ST
DENVER, CO 8020
303.974.5873
WWW.LINGLEDESIGN.COM

DICKERSON ENGINEERING, INC.
Professional Electrical Engineers
3343 NORTH RIDGE AVENUE
ARLINGTON HEIGHTS, IL 60004
TEL (847) 966-0260
WWW.DEI-PE.COM
ILLINOIS REGISTERED DESIGN FIRM # 184-000949

© ALL DRAWINGS AND WRITTEN MATERIAL CONTAINED HEREIN ARE THE PROPERTY OF THE LINGLE DESIGN GROUP, INC. THEY MAY NOT BE REVISED, COPIED, REUSED, OR DISCLOSED IN ANY MANNER WITHOUT WRITTEN AUTHORIZATION FROM THE ARCHITECT.

JOSEPH HERMANEK LICENSED 27273 PROFESSIONAL ENGINEER KANSAS

SIGNATURE

07/28/2026 DATE | 04/30/2028 EXPIRATION DATE

COVERING ELECTRICAL DESIGN

STATE ID: 150405
PROJECT #: 25-079
NATIONAL #: 44936
DRAWN BY: DEI
CHECKED BY: AH/RS

DATE: 10/15/2025 - PERMIT / BID SET

REVISIONS
1 11/12/25 - QC COMMENTS/PROTO UPDATE
2 02/23/2026 - CITY COMMENTS
3 03/10/2026 - DECOR UPDATE
4 08/02/26 - OWNER COMMENTS / PROTOTYPE UPDATES

CLIENT
McDonald's USA, LLC

PROTOTYPE
BB20 4590 MS-HB
ISSUE DATE 08/27/25

ADDRESS
2320 METROPOLITAN AVE
KANSAS CITY, KS 66106

SHEET TITLE
ROUGH-IN FLOOR PLAN

SHEET NUMBER:
E1.1

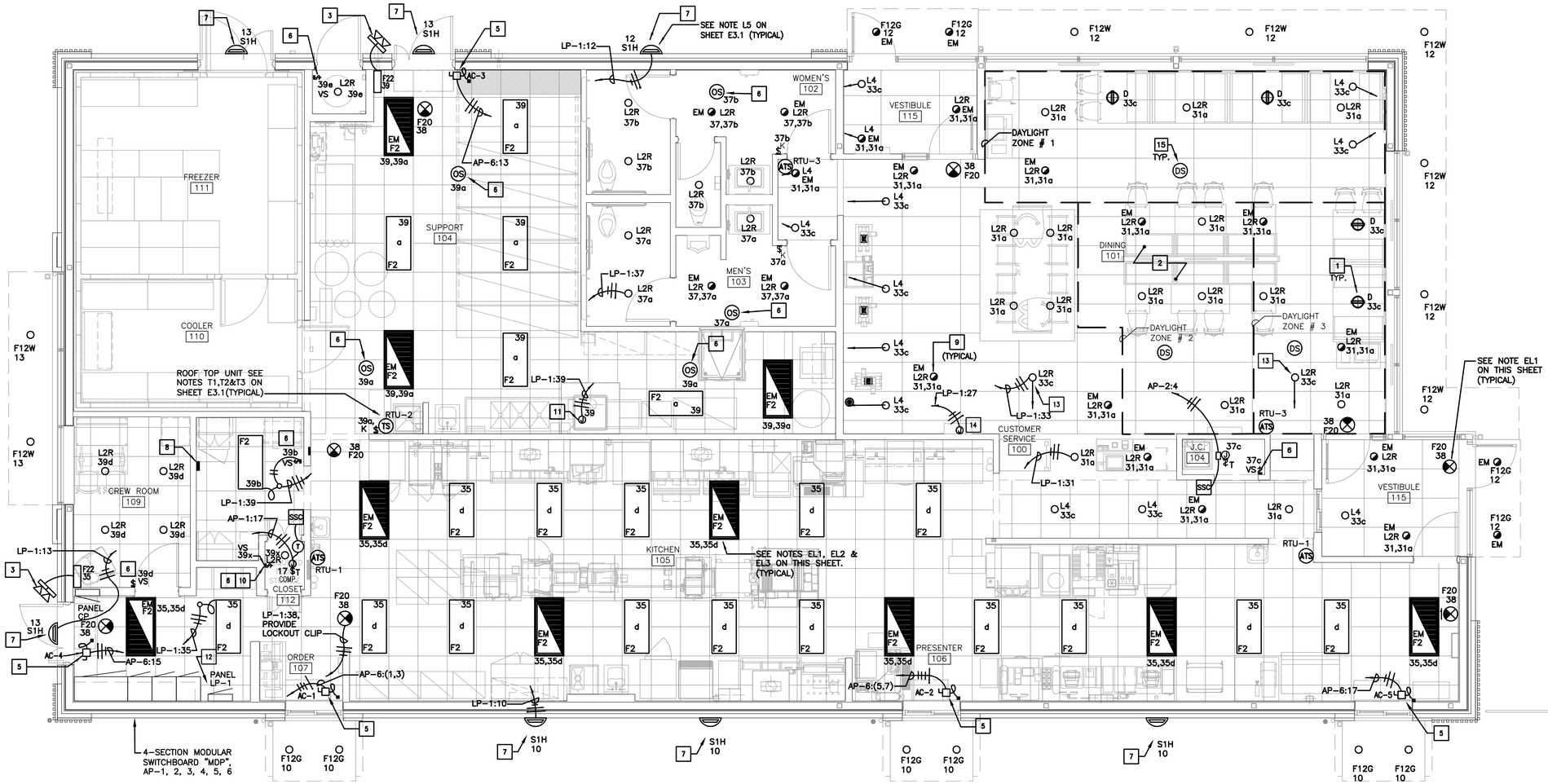

KEY NOTES

1. CENTER PENDANT LIGHTS OVER TABLES (TYPICAL)
2. ALL SOFFIT LOCATIONS, LIGHTING, & SUPPLY GRILLS SHALL BE COORDINATED WITH DECOR COMPANY DRAWING PRIOR TO INSTALLATION.
3. EC SHALL INSTALL AND CONFIGURE REMOTE EMERGENCY LIGHTING AT ALL EGRESS EXTERIOR DOORS FOR MAXIMUM ILLUMINATION AT POINTS OF EGRESS. INSTALL WP J-BOX WITHIN SOFFIT TO ALLOW A FLUSH INSTALLATION OF ANY EXTERIOR EMERGENCY EGRESS LIGHTING (TYPICAL).
4. ADJUSTABLE WALL WASH FIXTURE TO ILLUMINATE LOGO OR GRAPHICS. EC SHALL VERIFY EXACT LOCATION SO AS TO ADEQUATELY ILLUMINATE McDONALD'S ARCH LOGO SIGN AND GRAPHICS.
5. AIR CURTAIN UNIT. NON HEATED VERSION TO USE 1/2"C. 2#12, 1#12GRD. HEATED VERSION TO USE 1"C. 2#6, 1#10 GRD. (TYPICAL).
6. PROVIDE DUAL TECHNOLOGY CEILING MOUNTED OCCUPANCY SENSOR OR WALL MOUNTED VACANCY SENSOR AS SHOWN. ORDER ALL SENSORS FROM SECURITY LIGHTING SYSTEMS, INC.
7. RADIAL WALL SCONCE. SEE NOTE L2 ON SHEET E3.1 AND ARCHITECTURAL ELEVATIONS ON SHEETS A2.0 & A2.1. (TYPICAL)
8. BUILDING AUTOMATION SYSTEM LOCATION. SEE LIGHTING CONTROL DETAILS ON SHEET E4.1.
9. PROVIDE LIGHTING INVERTER FOR USE WITH FIXTURES SHOWN SLASHED. MODEL #LG125T SHOULD BE USED FOR L2R, L4 & F12G WITH NOT MORE THAN SEVEN DOWNLIGHTS CONNECTED TO EACH INVERTER, AND NOT MORE THAN TWO F2 FIXTURES. IF DECOR USES ALTERNATE FIXTURES, COORDINATE INVERTER TO BE USED WITH LIGHTING SUPPLIER. E.C. SHALL VERIFY THE QUANTITY OF FIXTURES THAT CAN BE CONNECTED WITHOUT EXCEEDING OPERATING CAPACITY OF UNIT AND PROVIDE ADDITIONAL CIRCUITS AND INVERTERS AS REQUIRED. (TYPICAL)
10. CENTER VACANCY SENSOR SWITCH OPPOSITE COMPUTER RACK IN A LOCATION ACCESSIBLE FROM BOTH DOORS FOR CONTROL OF CEILING MOUNTED LIGHT, IN DATA ROOM. FAN CONTROLLED BY LOCAL THERMOSTAT.
11. PROVIDE POWER FOR LIGHT WITHIN EXHAUST HOOD. INTEGRATE INTO LOCAL LIGHTING CONTROLS.
12. LIGHTING CONTACTORS IN NEMA 1 ENCLOSURE JUST BELOW CEILING. EC SHALL PROVIDE 120 VOLT CONTROL CIRCUIT TO CONTACTOR PANEL. VERIFY EXACT LOCATION IN FIELD AND REFER TO DRAWING E4.1 FOR ADDITIONAL DETAILS.
13. ADJUST FIXTURE TO ILLUMINATE DELIVERY POD SHELVING.
14. PROVIDE POWER FOR LIGHT WITHIN TOY DISPLAY. COORDIANTE EXACT LOCATION WITH DECOR DRAWINGS.
15. NEW DAYLIGHT SENSOR TO BE INSTALLED TO CONTROL DAYLIGHT AREAS IN THE DINNING AREAS. ORDER ALL DAYLIGHT SENSORS FROM; SECURITY LIGHTING SYSTEMS, INC.

EMERGENCY LIGHTING NOTES

EL1. EC SHALL VERIFY ALL REQUIREMENTS AND FINAL EMERGENCY LIGHTING LOCATIONS WITH LOCAL AUTHORITIES. INCLUDE ALL COSTS IN BASE BID.

EL2. IF NOT INSTALLED BY MANUFACTURER, EC SHALL BE RESPONSIBLE FOR THE COMPLETE INSTALLATION OF THE EMERGENCY INVERTER IN SWITCHED EMERGENCY FIXTURES SHOWN ON THIS SHEET.

EL3. LED FIXTURES DENOTED AS SWITCHED EMERGENCY SHALL BE CONNECTED TO AN INVERTER. INVERTER SHALL BE CAPABLE OF ILLUMINATING FIXTURE FOR 1.5 HOURS TO COMPLY WITH NEC SECTION 700 AND UL924.

EL4. EMERGENCY BATTERY LIGHTING WALL PACKS IN PLAYPLACE SHALL BE LOCATED SO AS TO PROVIDE FOR MAXIMUM ILLUMINATION OF AREA. EC SHALL VERIFY EXACT PLACEMENT IN THE FIELD WITH McDONALD'S ACM. (IF APPLICABLE)

EL5. EMERGENCY LIGHTING HAS BEEN DESIGNED PER NFPA 101 TO MAINTAIN 1 FC IN PATH OF EGRESS. IF FIELD CONDITIONS REQUIRE ANY CHANGES TO LIGHTING DESIGN, EMERGENCY LIGHTING, SHALL BE INSTALLED TO MEET THE ABOVE REQUIREMENTS.

EL6. WIRE MIGHT LIGHTING/EXIT SIGNS/BATTERY LIGHTS AHEAD OF LOCAL SWITCHING IN ACCORDANCE WITH THE NEC 700-12(e) PROVIDE IDENTIFICATION OF ALL EMERGENCY CIRCUITS IN ACCORDANCE WITH NEC 700-9. PROVIDE LOCKOUT CIRCUIT BREAKERS FOR EMERGENCY LIGHTING CIRCUITS.

EL7. EC SHALL INSTALL A LOCK ON CIRCUIT BREAKER HANDLE, FOR ALL EMERGENCY LIGHTING CIRCUITS. EC SHALL VERIFY ALL REQUIREMENTS AND FINAL EMERGENCY LIGHTING LOCATIONS WITH LOCAL AUTHORITIES. INCLUDE ALL COSTS IN BASE BID.

1 E2.0 LIGHTING FLOOR PLAN

SCALE: 1/4"=1'-0"

0' 4' 8' 12' 16'

KEY

DENOTES FIXTURE TYPE: EM / F2

DENOTES CIRCUIT NUMBER: 35,35d

LIGHTING FIXTURES SHOWN HALF HATCHED SHALL BE WIRED TO AN EMERGENCY INVERTER AND CIRCUITED AS SWITCHED EMERGENCY FIXTURES SO THE FIXTURE IS CONTROLLED VIA TIMECLOCK BUT TURNS ON UPON LOSS OF POWER. SEE NOTE EL3 ON THIS SHEET. COORDINATE LOCATION WITH DECOR.

LIGHTING FIXTURES SHOWN WITH ARROW DENOTES GENERAL DIRECTION TO AIM ADJUSTABLE FIXTURES. VERIFY IN FIELD.

VERIFY FINAL LIGHTING LAYOUT AND SPECIFICATION W/ ACM AND SEATING & DECOR COMPANY PRIOR TO ORDERING LIGHTING PACKAGE.

SEE SHEET E3.1 FOR GENERAL LIGHTING NOTES AND "ROOF PLAN" (SHEET E2.1) FOR ADDITIONAL ELECTRICAL ROUGH-IN & LIGHTING REQUIREMENTS.

LIGHTING FIXTURE SCHEDULE:

MARK	SYMBOL	DESCRIPTION	DIFFUSER	LAMPS WATTS	LAMPS TYPE	BALLAST	MOUNTING	MANUFACTURER AND CATALOG NUMBER
F2		2' X 4' GRID TROFFER	PRISMATIC ACRYLIC	48W	LED	–	RECESSED	SECURITY LIGHTING: # CBT24-A-LSCS-EDD-HIGH, EMERGENCY FIXTURE # CBT24-A-LSCS-EDD-ELL14-HIGH
L2R	○ OR ⊕	4" LED DOWN LIGHT	–	16W	LED	–	RECESSED	SECURITY LIGHTING # RDA-136LM-30-FL-S/RDA-136-H VERIFY DOWNLIGHT TO BE USED WITH PHOTOMETRIC
L4	○ OR ◐	3" LED ADJUSTABLE DOWN LIGHT	–	7W	LED	–	RECESSED	SECURITY LIGHTING # RDA-60LM-30-NF-S/RDA-60-H VERIFY DOWNLIGHT TO BE USED WITH PHOTOMETRIC
F12G	○	6" LED DOWN LIGHT – GOLD TRIM	–	12.5W	LED	–	RECESSED	SECURITY LIGHTING # 8542-5CCT
F12W	○	6" LED DOWN LIGHT – WHITE TRIM	–	12.5W	LED	–	RECESSED	SECURITY LIGHTING # 8542-5CCT
D		ORBIT PENDANT	–	19W	LED	–	SUSPENDED	SECURITY LIGHTING # MPLN-11R-120-LM-30-DGCDG
F20		EXIT SIGN WITH BATTERY BACKUP	–	1.8W	LED	–	SURFACE	SECURITY LIGHTING: EVEURWE. SEE NOTE LS2 ON THIS SHEET.
F22		EMERG BATTERY & 2 REMOTE HEADS	–	–	LED	–	SURFACE TO WALL OR SOFFIT	SECURITY LTG. #EV4D-02L-0/EVODB
S1H		"DOWN ONLY" RADIAL WALL SCONCE – SILVER	TEMPERED GLASS	(1)-14W	LED	–	SURFACE TO WALL	SECURITY LIGHTING: #RWSC-36L-5K-DO-U-PS

LIGHTING SCHEDULE NOTES:

LS1. ORDER LED EXIT SIGNS WITH LETTER COLORS THAT COMPLY WITH LOCAL CODES.
- FOR RED LETTERS USE #EVE-U-R (UNIVERSAL),
- FOR GREEN LETTERS USE #EVE-U-G (UNIVERSAL), OR
IF THE ABOVE EXIT SIGNS DO NOT COMPLY WITH LOCAL CODES USE: LED SIGN WITH BATTERY BACKUP, LETTER SIZE, COLOR, TYPE & DIRECTIONAL ARROWS AS REQUIRED BY THE LOCAL AUTHORITIES.

LS2. ALL INTERIOR LIGHT FIXTURES SHALL BE 120 VOLT UNLESS NOTED OTHERWISE.

LS3. LIGHTING FIXTURES HAVE BEEN CHOSEN TO ACHIEVE MAXIMUM ENERGY CONSERVATION WHILE MAINTAINING ADEQUATE LEVEL OF ILLUMINATION. SPECIFICATIONS SHALL BE STRICTLY FOLLOWED. ANY DEVIATION FROM THE SPECIFICATIONS SHALL BE APPROVED IN WRITING BY McDONALD'S CORPORATION.

McDONALD'S SITE SIGNAGE:

EC SHALL PROVIDE:

ELECTRICAL CONTRACTOR SHALL COORDINATE POWER REQUIRED FOR ROAD SIGN. MOST SIGNS REQUIRE (1) 20 AMP 120V CIRCUIT. IF USED A 90-200 SIGN REQUIRES (4) 20 AMP 120V CIRCUITS OR ONE 1-PHASE 60 AMP 120/208V CIRCUIT. COORDINATE WITH SUPPLIERS DRAWINGS.
(1) 20 AMP 208 VOLT CIRCUIT, EC TO WIRE 2#12 TO 208 VOLT FLAG FLOODLIGHTS.
(1) 20 AMP 120 VOLT CIRCUIT TO D.C.O. IN ROAD SIGN BASE IF REQUIRED.
(2) 20 AMP 120 VOLT CIRCUITS FOR INGRESS/EGRESS DIRECTIONAL SIGNS (IF APPLICABLE).

*VERIFY EXACT LOCATIONS/TYPES/QUANTITIES OF ALL THE ABOVE WITH SITE/CIVIL PLANS AND MCD ACM.

ORDER ALL LIGHT FIXTURES FROM:

SECURITY LIGHTING SYSTEMS, INC.
PHONE: 1-800-LIGHT-IT (800-544-4848)
EMAIL: SLORDERS@CURRENTLIGHTING.COM

CS ILLUMINATIONS
PHONE: 760-477-1244
EMAILS: MCD@CSILLUMINATIONS.COM
WWW.CSILLUMINATIONS.COM/MCD

4 BACK OF HOUSE TROFFERS, EXTERIOR LIGHTING, AND LOT LIGHTING FURNISHED BY MCDONALDS GLOBAL STRATEGIC SOURCING SERVICES. ALL OTHER INTERIOR LIGHTING INCLUDING EMERGENCY AND EXIT ARE FURNISHED BY GENERAL CONTRACTOR.

LINGLE DESIGN GROUP INC
158 WEST MAIN STREET
LENA, IL 61048
815.369.9155
1764 BLAKE ST
DENVER, CO 8020
303.974.5873
WWW.LINGLEDESIGN.COM

DICKERSON ENGINEERING, INC.
Professional Electrical Engineers
3343 NORTH RIDGE AVENUE
ARLINGTON HEIGHTS, IL 60004
TEL. (847) 966-0290
WWW.DEI-PE.COM
ILLINOIS REGISTERED DESIGN FIRM # 184-000349

© ALL DRAWINGS AND WRITTEN MATERIAL CONTAINED HEREIN ARE THE PROPERTY OF THE LINGLE DESIGN GROUP, INC. THEY MAY NOT BE REVISED, COPIED, REUSED, OR DISCLOSED IN ANY MANNER WITHOUT WRITTEN AUTHORIZATION FROM THE ARCHITECT.

JOHN HERMANN LICENSED 27273 KANSAS PROFESSIONAL ENGINEER

SIGNATURE

07/28/2026 DATE — 04/30/2028 EXPIRATION DATE

COVERING ELECTRICAL DESIGN

STATE ID: 150405
PROJECT #: 25-079
NATIONAL #: 44936
DRAWN BY: DEI
CHECKED BY: AHRS

DATE: 10/15/2025 - PERMIT / BID SET

REVISIONS

1 11/12/25 - QC COMMENTS/PROTO UPDATE
2 02/23/2026 - CITY COMMENTS
3 03/10/2026 - DECOR UPDATE
4 08/02/26 - OWNER COMMENTS / PROTOTYPE UPDATES

CLIENT

McDonald's USA, LLC

PROTOTYPE

BB20 4590 MS-HB
ISSUE DATE 08/27/25

ADDRESS

2320 METROPOLITAN AVE
KANSAS CITY, KS 66106

SHEET TITLE

LIGHTING PLAN

SHEET NUMBER:

E2.0

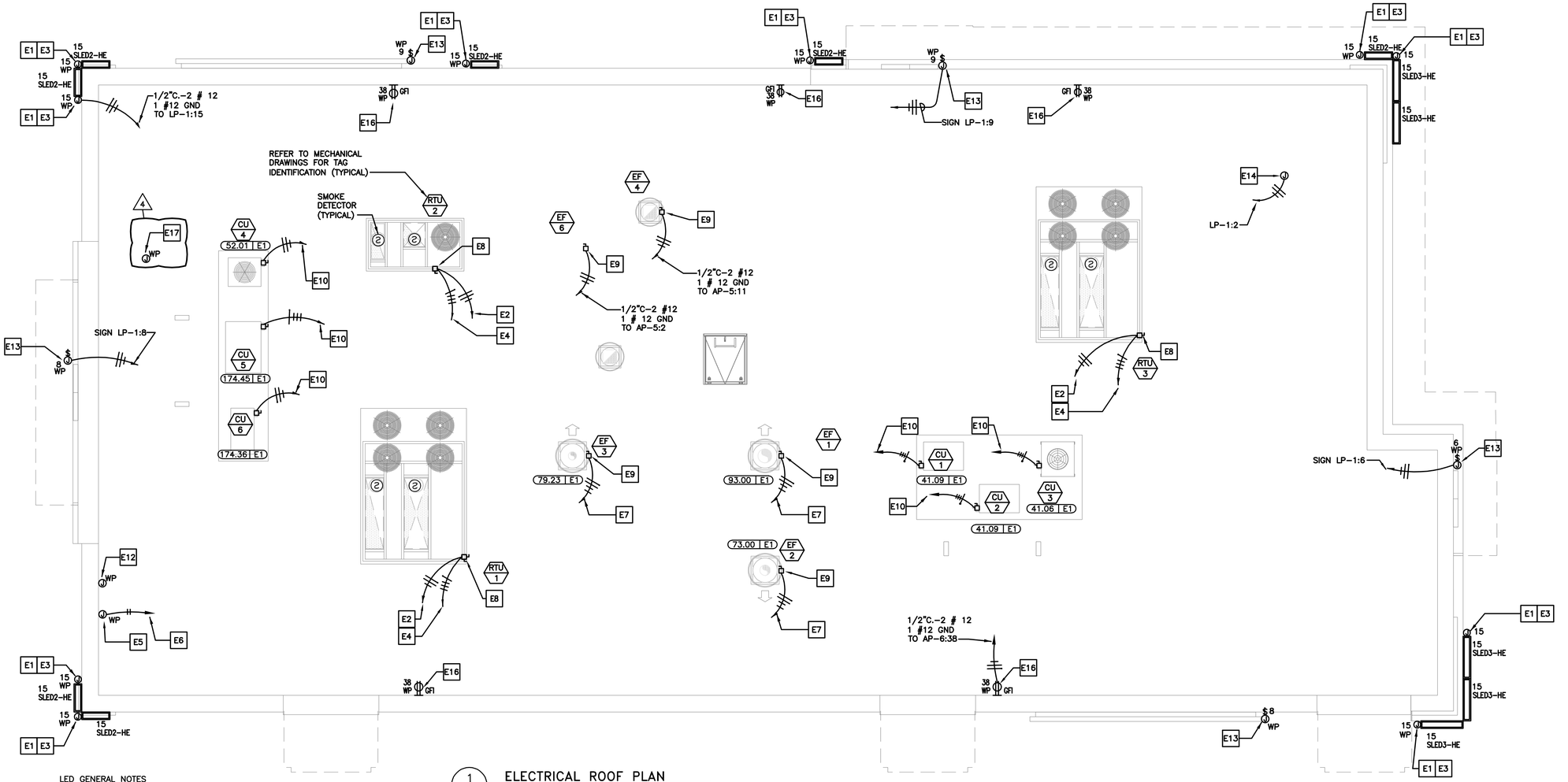

LED GENERAL NOTES

1. PLACE LED FIXTURE AT DESIRED LOCATION AND ATTACH POWER SUPPLY AND MOUNTING BRACKET AS RECOMMENDED BY MANUFACTURER.
2. EC SHALL CONNECT NEW FIXTURES TO A 120V CIRCUIT AND MAKE ALL ELECTRICAL CONNECTIONS AS REQUIRED FOR A COMPLETE OPERATING SYSTEM.
3. POWER SUPPLY SHALL ALWAYS BE INSTALLED TO THE LEFT SIDE OF FIXTURE WHEN FACING BRAND WALL.

1 / E2.1 ELECTRICAL ROOF PLAN

SCALE: 1/4"=1'-0"

0' 4' 8' 12' 16'

KEYED NOTES

- E1 EVERY LINEAR RUN OF SLED FIXTURES REQUIRES A DEDICATED WHIP KIT PROVIDED WITH FIXTURE. CONTRACTOR TO FIELD VERIFY FIXTURE MOUNTING HEIGHT, LOCATION, QUANTITY, FIXTURE LENGTHS, AND ALL ELECTRICAL CONNECTION REQUIREMENTS WITH SECURITY LIGHTING PRIOR TO ORDERING AND INSTALLATION (TYPICAL).
- E2 WEATHER PROOF RECEPTACLES WITH GFCI PROTECTION ARE PROVIDED AND MOUNTED WITHIN MOTOR HOUSING LOCATIONS PER NEC ARTICLE 210.63. CIRCUIT SHALL EMANATE FROM PANEL AP-5,CCT.#13.(TYPICAL).
- E3 SMOOTH BRACING IS REQUIRED FOR LED FIXTURE INSTALLATION UNDER COPING/FLASHING.(TYPICAL)
- E4 REFER TO SHEET E4.0 FOR CONDUIT AND WIRE SIZE.(TYPICAL)
- E5 E.C SHALL PROVIDE A WEATHER-PROOF J-BOX ON INSIDE FACE OF PARAPET, MOUNTED 6" BELOW TOP OF PARAPET FOR LIGHTING CONTROL PANEL PHOTOCELL. (PHOTOCELL FURNISHED BY OTHERS AND INSTALLED BY EC). REFER TO LIGHTING CONTROL DETAILS ON E4.1
- E6 TO LIGHTING ENCLOSURE W/ TIMER. COORDINATE WITH LIGHTING CONTROL DETAILS ON SHEET E4.1
- E7 COOKING EQUIPMENT EXHAUST FANS. SEE SHEET E3.0 FOR ELECTRICAL REQUIREMENTS. SEE SHEET E3.2 FOR EXHAUST FAN INTERLOCK WIRING DIAGRAMS. (TYPICAL)
- E8 PROVIDE NEMA 3R DISCONNECT WITH CURRENT LIMITING FUSES TO COMPLY WITH NEC 110 AND 440. ELECTRICAL CONTRACTOR SHALL STUB UP THRU RACEWAY IN CURB TO ELIMINATE CONDUIT PENETRATION OF ROOFING. (TYPICAL)
- E9 EXTERNAL NEMA 3R MOUNTED ON SIDE OF FAN BY MANUFACTURER. ELECTRICAL CONTRACTOR SHALL STUB-UP THRU ROOF AND PROVIDE FLEXIBLE WEATHERPROOF CONDUIT FROM ROOF PENETRATION TO DISCONNECT (TYPICAL).
- E10 REMOTE CONDENSING UNITS. SEE SHEET E3.0 FOR WIRING AND CIRCUITRY REQUIREMENTS.
- E11 CANOPY LIGHT. LP-1:11 EC SHALL VERIFY EXACT SPECIFICATIONS AND LOCATION WITH MANUFACTURER. VERIFY EXACT INFEED REQUIREMENTS IN THE FIELD. SEE NOTE L5 ON SHEET E3.1. (TYPICAL)
- E12 E.C. SHALL PROVIDE A WEATHER-PROOF JUNCTION BOX WITH ¾"C STUB DOWN TO CEILING SPACE WITH BUSHING FOR ROOF-TOP CAMERA OR SATELLITE. VERIFY EXACT LOCATION(S) WITH MCD AREA CONSTRUCTION MANAGER PRIOR TO INSTALLATION.
- E13 E.C. SHALL PROVIDE A JUNCTION BOX FOR ARCH LOGO / McDONALD'S FASCIA / PLAY-PLACE SIGN. SEE NOTE L1 ON SHEET E3.1. COORDINATE EXACT LOCATION IN FIELD WITH ACM. ALL SIGNS PROVIDED WITH INTEGRAL DISCONNECT SWITCH FROM MANUFACTURER.(TYPICAL)
- E14 E.C. SHALL PROVIDE A JUNCTION BOX FOR ROOF-TOP FLAG POLE LIGHTING. VERIFY LOCATION(S) WITH MCD PROJECT MANAGER PRIOR TO INSTALLATION.
- E15 FLOOD LIGHT MOUNTED ABOVE CANOPY. LP-1:11 EC SHALL VERIFY EXACT SPECIFICATIONS AND LOCATION WITH ARCHITECTURAL ELEVATIONS. VERIFY EXACT INFEED REQUIREMENTS IN THE FIELD. SEE FLOOD LIGHT DETAIL ON SHEET E3.1. (TYPICAL)
- E16 WEATHER PROOF "IN USE" COVER TO COMPLY WITH NEC 406.8(B) (TYPICAL).
- E17 PROVIDE 2" CONDUIT FOR 5G ANTENNA. PROVIDE PORTALS PLUS PLASTI-FLASH WITH C-126 CAP (OR EQUAL) FOR ROOF PENETRATION. TERMINATE CONDUIT A MIN. OF 24" ABOVE FINISHED ROOF WITH GOOSENECK. PROVIDE # 6 GROUND CONDUCTOR FROM BUILDING GROUNDING SYSTEM TO BUILDING EXTERIOR 5G ANTENNA. FINAL CONNECTIONS TO ANTENNA BY ACCENTURE. (4)

DRAWING NOTES

1. SEE DRAWING M-4.0 FOR GENERAL MECHANICAL NOTES.
2. SEE DRAWINGS M-3.0 AND M-4.1 FOR MECHANICAL EQUIPMENT SCHEDULES AND DETAILS.
3. SEE DRAWING M-4.0 FOR MECHANICAL LEGEND.
4. SEE DRAWING K-2.1 FOR REMOTE CONDENSER AND MAC UNIT INFORMATION.
5. EC SHALL FIELD VERIFY THAT LIGHT FIXTURES DO NOT OBSTRUCT OR CONFLICT WITH THE WORK OF OTHER TRADES. IF A DISCREPANCY IS FOUND, THE EC SHALL IMMEDIATELY NOTIFY THE GC BEFORE THE THE INSTALLATION OF SUCH FIXTURE(S). EC SHALL COORDINATE LOCATIONS OF ALL LIGHT FIXTURES IN DINING AREA WITH FINAL SEATING AND DECOR PLANS.
6. EC SHALL COORDINATE LOCATION OF ALL EXTERIOR LIGHTS WITH McDONALD'S PROJECT MANAGER TO AVOID INTERFERENCE WITH ANY SPECIAL EXTERIOR TREATMENTS. INSTALL LIGHT FIXTURES WITH CORRECT ORIENTATION PER MANUFACTURER'S INSTRUCTIONS. EC SHALL VERIFY THAT NOT MORE

DUCT MOUNTED SMOKE DETECTOR NOTES:
REFER TO MECHANICAL DRAWINGS FOR ADDITIONAL INFORMATION

DUCT MOUNTED SMOKE DETECTOR OPERATION:
1) DUCT MOUNTED DETECTOR ACTIVATION SHALL SHUT DOWN THE AIR DISTRIBUTION SYSTEM COMPLIANT WITH INTERNATIONAL MECHANICAL CODE (IMC) 606-SMOKE DETECTOR SYSTEM CONTROL, NFPA 72 & 90A AND UNIFORM MECHANICAL CODE (UMC) 609-AUTOMATIC SHUTOFFS.
2) DUCT MOUNTED DETECTOR SHALL ACTIVATE A VISIBLE AND AUDIBLE SUPERVISORY SIGNAL COMPLIANT WITH ABOVE MENTIONED CODE.
3) A DUCT MOUNTED DETECTOR TROUBLE CONDITION SHALL ACTIVATE A VISIBLE OR AUDIBLE SIGNAL COMPLIANT WITH ABOVE MENTIONED CODE.
4) CONDUCT A SMOKE TEST ON THE HVAC UNITS WITNESSED BY THE BUILDING INSPECTOR TO VERIFY FAN SHUT-DOWN AND SIGNAL ACTIVATION UPON SMOKE DETECTION.

REMOTE ALARM INSTALLATION:
1) CLEARLY LABEL TO INDICATE BOTH FUNCTION (IN-DUCT SMOKE DETECTOR ALARM) AND AIR HANDLING UNIT ASSOCIATED WITH EACH SMOKE DETECTOR. COMPLY WITH NFPA 72 AND ALL LOCAL CODES.
2) PLACE REMOTE ALARMS IN A READILY ACCESSIBLE LOCATION APPROVED BY THE AUTHORITY HAVING JURISDICTION.

COMPONENT REQUIREMENTS:
(1) DUCT MOUNTED SMOKE DETECTOR FURNISHED WITH UNIT
(1) MULTI-SIGNALING DEVICE CONTAINING:
-A BLUE LENSED STROBE LIGHT INDICATING "SMOKE"
-A KEYED TEST SWITCH
-A GREEN "POWER" LED (ON WHEN DUCT DETECTOR IS POWERED-ALL LEDS ARE OFF UPON LOSS OF POWER)
-A YELLOW "TROUBLE" LED (ON WHEN DUCT DETECTOR SENSOR BOARD IS MISSING OR THE COVER IS REMOVED FOR MORE THAN 20 MINUTES)
-A RED "ALARM" LED (LED AND HORN WILL BE ON WHEN EVER THE DUCT SMOKE DETECTOR IS IN ALARM)

INSTALLATION:
1. ALL WIRING BETWEEN THE DUCT MOUNTED SMOKE DETECTOR AND DEVICES SHALL BE CONNECTED AS INDICATED IN MANUFACTURER'S GUIDELINES.

LED FIXTURE SCHEDULE:

CONTRACTOR SHALL VERIFY ALL FIXTURE LENGTHS PRIOR TO ORDER

MARK	SYMBOL	DESCRIPTION	DIFFUSER	LAMPS		BALLAST	MOUNTING	MANUFACTURER AND CATALOG NUMBER
				WATTS	TYPE			
SLED2-HE	▬	DOWN ONLY ACCENT LIGHTING (SEE PLAN)	TEMPERED GLASS	1-10W PER FIXTURE	LED	–	SURFACE	SECURITY LIGHTING: SLED-HE-24-DO-U-IO CUSTOM BUILT FOR EXTERIOR ACCENT CHANNELS.
SLED3-HE	▬	DOWN ONLY ACCENT LIGHTING (SEE PLAN)	TEMPERED GLASS	1-14W PER FIXTURE	LED	–	SURFACE	SECURITY LIGHTING: SLED-HE-36-DO-U-IO CUSTOM BUILT FOR EXTERIOR ACCENT CHANNELS.

LINGLE DESIGN GROUP INC
158 WEST MAIN STREET
LENA, IL 61048
815.369.9155
1764 BLAKE ST
DENVER, CO 8020
303.974.5873
WWW.LINGLEDESIGN.COM

DICKERSON ENGINEERING, INC.
Professional Electrical Engineers
3343 NORTH RIDGE AVENUE
ARLINGTON HEIGHTS, IL 60004
TEL. (847) 966-0260
WWW.DEI-PE.COM
ILLINOIS REGISTERED DESIGN FIRM # 184-000949

© ALL DRAWINGS AND WRITTEN MATERIAL CONTAINED HEREIN ARE THE PROPERTY OF THE LINGLE DESIGN GROUP, INC. THEY MAY NOT BE REVISED, COPIED, REUSED, OR DISCLOSED IN ANY MANNER WITHOUT WRITTEN AUTHORIZATION FROM THE ARCHITECT.

LICENSED
AUGUST HERMANN
27273
KANSAS
PROFESSIONAL ENGINEER
SIGNATURE
07/28/2026 DATE
04/30/2028 EXPIRATION DATE
COVERING ELECTRICAL DESIGN

STATE ID: 150405
PROJECT #: 25-079
NATIONAL #: 44936
DRAWN BY: DEI
CHECKED BY: AHRS

DATE:
10/15/2025 - PERMIT / BID SET

REVISIONS
1 11/12/25 - QC COMMENTS/PROTO UPDATE
2 02/23/2026 - CITY COMMENTS
3 03/10/2026 - DECOR UPDATE
4 08/02/26 - OWNER COMMENTS / PROTOTYPE UPDATES

CLIENT
McDonald's USA, LLC

PROTOTYPE
BB20 4590 MS-HB
ISSUE DATE 08/27/25

ADDRESS
2320 METROPOLITAN AVE
KANSAS CITY, KS 66106

SHEET TITLE
ELECTRICAL ROOF PLAN

SHEET NUMBER:
E2.1

ELECTRICAL SCHEDULE

PB = Pullbox
JB = Junction Box
EC = Electrical Contractor
VIF = Verify in Field

TAG #	QTY	DESCRIPTION	VOLT/PH	FLA	BRK SIZE	COND/WIRE	PNL/CCT	RECEP TYPE	HGT AFF	REQUIREMENTS & REMARKS
004.23E4	2	DIGITAL MERCHANDISER – MEDIA PLAYER	120/1 ISOLATED	1.0	20A	1/2"C–2#12IG	CP:6	IG5262	3'–4"	USE SAME RECEPTACLE AS 4.23E6
004.23E5	2	DIGITAL MERCHANDISER – MEDIA PLAYER	DATA CABLE	–	–	–	–	JB	3'–4"	JB W/ 1" C. TO FULL HEIGHT WALL AND TO ABOVE CEILING W/BUSHINGS. FOR DATA CABLES. SUPPLY W/GROMMETED OPENING IN COVER PLATE
004.23E6	2	DIGITAL MERCHANDISER	120/1 ISOLATED	2.6	20A	1/2"C–2#12IG	CP:6	IG5262	3'–4"	–
009.15E1	1	UTILITY CHASE – FFDT INTERIOR WALL	–	–	–	–	–	–	SEE RMKS	UTILITY CHASE AND RECEPTACLES PROVIDED BY K.E.S.
009.16E1	1	UTILITY CHASE – FFDT EXTERIOR WALL	–	–	–	–	–	–	SEE RMKS	UTILITY CHASE AND RECEPTACLES PROVIDED BY K.E.S.
020.01E1	2	AUTOMATED BEVERAGE SYSTEM 2.0	120/1	5.0	20A	1/2"C–2#12	AP–1:12, AP–2:24	5–20R	2'–0"	–
020.01E2	2	AUTOMATED BEVERAGE SYSTEM 2.0	120/1	14.9	20A	1/2"C–2#12	AP–1:6, AP–2:26	5–20R	3'–10"	FOR PRE–COOLER
021.01E3	3	COFFEE BREWER (THERMAL POTS)	120–208/1	15.5	20A	1/2"C–3#12	AP–1:(2,4)(14,16), AP–5:(20,22)	BY KES	SEE RMKS	EC TO EXTEND CIRCUIT TO L14–20R RECEPTACLE IN CHASE
023.12E1	1	COFFEE CREAM DISPENSER	120/1	1.0	20A	1/2"C–2#12	AP–1:8	BY KES	SEE RMKS	EC TO EXTEND CIRCUIT TO 5–20R RECEPTACLE IN CHASE
023.14E1	1	SUGAR/SWEETENER DISPENSER	120/1	1.5	20A	1/2"C–2#12	AP–1:8	BY KES	SEE RMKS	EC TO EXTEND CIRCUIT TO 5–20R RECEPTACLE IN CHASE
023.17E1	1	SPECIALTY COFFEE	208/1	27.0	40A GFCI	3/4"C–3#8	AP–1:(19,21)	BY KES	SEE RMKS	EC TO EXTEND CIRCUIT TO L6–30R RECEPTACLE IN CHASE
024.02E1	1	JUICE DISPENSER	120/1	4.5	20A	1/2"C–2#12	AP–1:8	5–20R	SEE RMKS	EC TO EXTEND CIRCUIT TO 5–20R RECEPTACLE IN CHASE
025.07E1	1	INFUSION TEA BREWER – MIS	120–208/1	13.0	20A	1/2"C–3#12	AP–2:(32,34)	L14–20R	2'–3"	–
025.07E2	1	INFUSION TEA BREWER – MIS	–	–	–	–	–	JB	2'–3"	FOR WATER LINE TO ICED TEA BREWER IF CHASE IS NOT SPECIFIED. (SEE P1.6)
031.03E1	1	SODA SYSTEM PACKAGE B.I.B.(RECIRCULATING– 3 TOWERS) – REMOTE	208/3	26.0	30A	3/4"C–3#10	AP–2:(37,39,41)	SEE RMKS	3'–0" SEE RMKS	EC SUPPLIES 30A–3P NF DISC SW MTD 9" BELOW CEILING PER NEC SECT. 404.8(A)
031.03E2	1	SODA SYSTEM PACKAGE B.I.B.(RECIRCULATING– 3 TOWERS) – REMOTE	–	–	–	–	–	JB	4'–0"	FOR CONTROL WIRES FROM REMOTE CONDENSING UNIT
031.03E3	1	SODA SYSTEM PACKAGE B.I.B.(RECIRCULATING– 3 TOWERS) – REMOTE	120/1	(2) 6.8	20A	1/2"C–2#12	AP–2:35	5–20R	6'–6"	FOR WATER BOOSTER SYSTEM AND OPTIONAL AIR COMPRESSOR
032.02E1	1	REVERSE OSMOSIS WATER FILTRATION SYSTEM – TANKLESS	120/1	4.0	20A	1/2"C–2#12 EA.	AP–2:23	5–20R	6'–0"	–
034.00E1	1	AIR COMPRESSOR	120/1	5.7	20A	1/2"C–2#12	AP–2:2	5–20R	6'–0"	–
037.03E1	2	CO2 SAFETY SYSTEM – DETECTOR	120/1	1.0	20A	1/2"C–2#12	AP–1:10	JB	SEE RMKS	PROVIDE LOCKOUT CB. SEE MECHANICAL DRAWINGS
037.03E2	2	CO2 SAFETY SYSTEM	–	–	–	–	–	JB	SEE RMKS	FOR LV WIRES. STUB 3/4"C. ABV. CLG. SEE MECHANICAL DRAWINGS
037.03E4	4	CO2 SAFETY SYSTEM – CO2 DETECTOR AV ALARM	–	–	–	–	–	JB	7'–0" MINIMUM	STUB 3/4"C. ABOVE CLG. FOR LV COND. TO 037.03E2. SEE MECHANICAL DRAWINGS
038.00E1	1	CLEAN IN PLACE PANEL	120/1	1.0	20A	1/2"C–2#12	AP–2:21	5–20R	5'–6"	–
039.10E1	1	ICE MACHINE – 1400 LB.	208/3	13.4	20A	1/2"C–3#12	AP–2:(1,3,5)	SEE RMKS	SEE RMKS	EC SUPPLIES 30A–3P NF DISC SW MTD9"BELOW CEILING PER NEC 404.8(A) EX.2 VERIFY W/ AHJ
039.10E2	1	ICE MACHINE – 1400 LB.	–	–	–	–	–	JB	4'–6" SEE RMKS	CONTROL WIRES TO REMOTE CONDENSER
039.15E1	2	ICE MACHINE – 1000 LB.	120/1	1.1	15A	1/2"C–2#12	AP–1:37,39	5–20R	SEE RMKS	MOUNT 9" BELOW CEILING – CIRCUIT BREAKERS SHALL BE HACR TYPE
039.15E2	2	ICE MACHINE – 1000 LB.	–	–	–	1/2"C	–	JB	SEE RMKS	MOUNT 9" BELOW CEILING – CONTROL WIRES TO REMOTE CONDENSER
041.06E1	1	ICE MACHINE REMOTE CONDENSER – 1400 LB.	208/1	1.0	20A SEE RMKS	1/2"C–3#12	AP–1:(26,28)	SEE RMKS	SEE RMKS	EC TO PROVIDE WP 30A–2P NF DISC AT UNIT ON ROOF – CIRCUIT BREAKERS SHALL BE HACR TYPE
041.09E1	2	ICE MACHINE REMOTE CONDENSER – 1000 LB.	208/3	11.1	15A SEE RMKS	1/2"C–3#12 SEE RMKS	AP–1:(32,34,36)(38,40,42)	SEE RMKS	SEE RMKS	EC TO PROVIDE WP 30A–3P NF DISC AT UNIT ON ROOF – CIRCUIT BREAKERS SHALL BE HACR TYPE
043.21E1	1	OPTIMIZED ORDER ASSEMBLY TABLE	120/1	5.4	20A	SEE RMKS	KES BREAKER PANEL	SEE RMKS	SEE RMKS	PLUGS INTO KES OUTLET CHASE FOR HLA
052.01E1	1	SODA SYSTEM PACKAGE REMOTE CONDENSER – 3–TOWER	208/1	2.5	20A SEE RMKS	SEE RMKS	SEE RMKS	SEE RMKS	SEE RMKS	EC TO PROVIDE 30A–2P DISC SW W/15A FUSE – POWERED BY 31.03 – LOCATION BY ACM
052.01E2	1	SODA SYSTEM PACKAGE REMOTE CONDENSER – 3–TOWER	–	–	–	–	–	–	SEE RMKS	CONTROL WIRES TO SODA SYSTEM – LOCATION BY ACM
061.00E1	1	FRY BAGGING STATION 36"	120/1	12.5	20A	1/2"C–2#12	AP–1:31	JB	4'–0"	–
065.30E1	1	3–VAT LOV FRYER – ELECTRIC – F/F/F	208/3	38.9 EA. VAT	(3) 50A	1"C–3#6 EA. VAT	AP–4:(13,15,17)(19,21,23)(25,27,29)	BY KES	SEE RMKS	PLUGS INTO RACEWAY RECEP WITH(1)L21–20P INTERLOCK PLUG &(3) 15–60P POWER PLUG BY KES
066.47E1	1	4–VAT LOV FRYER – ELECTRIC – S/S/S/S	208/3	38.9 EA. VAT	(4) 50A	1"C–3#6 EA. VAT	AP–3:(1,3,5)(7,9,11)(2,4,6)(8,10,12)	BY KES	SEE RMKS	PLUGS INTO RACEWAY RECEP WITH(1)L21–20P INTERLOCK PLUG &(4) 15–60P POWER PLUG BY KES
073.00E1	1	UNIVERSAL EXHAUST HOOD 3–VAT FRYER	120/1	12.5, 9.8	(2)20A–1P	1/2"C–2#12EA	AP–1:23,24	BY KES	SEE RMKS	EC TO CONN POWER TO RACEWAY FLA = 12.0 FRYER CONTROLS, 0.5 CAPTURE JET & 9.8 INDIVID. EXHAUST FAN INTERLOCK
074.00E1	1	UNIVERSAL EXHAUST HOOD 4–VAT FRYER	120/1	13.5, 9.8	(2)20A–1P	1/2"C–2#12EA	AP–1:29,41	BY KES	SEE RMKS	EC TO CONN POWER TO RACEWAY FLA = 13.0 FRYER CONTROLS, 0.5 CAPTURE JET & 9.8 INDIVID. EXHAUST FAN INTERLOCK
079.26E2	2	VENTLESS HOOD COMBI OVEN	120/1	8.0	15A	1/2"C–2#12	AP–4:14,16	BY KES	SEE RMKS	EC TO EXTEND DEDICATED CIRCUIT TO 5–15R RECEPTACLE IN CHASE
085.05E1	1	FROZEN FRY DISPENSER	120/1	9.0	20A	1/2"C–2#12	AP–1:27	5–20R	4'–0"	–
091.02E1	1	WALL MOUNT FREEZER UNIT–SINGLE WIDE–HIGH CAPACITY	120/1	5.0	20A	1/2"C–2#12	AP–5:23	5–20R	7'–6"	–
094.01E1	1	UNIVERSAL EXHAUST HOOD 2–FULL–CLAM GRILLS	120/1	7.2, 13.8	(2)20A–1P	1/2"C–2#12	AP–2:13,17	BY KES	SEE RMKS	EC TO CONN. POWER TO RACEWAY FLA = (2) 3.6 GRILL CONTROLS & 13.8 INDIVID. EXHAUST FAN INTERLOCK
096.21E1	2	36" NEXT GEN 3–PLATEN CLAMSHELL GRILL – ELECTRIC	208/3	21.7, 43.3	(2)50A	1–1/2"C– 6#4	AP–3:(14,16,18)(20,22,24) AP–4:(1,3,5)(7,9,11)	BY KES	SEE RMKS	PLUGS IN RACEWAY RECEP WITH(1)L21–20P INTERLOCK& (2) 15–50P POWER PLUG EA GRILL
097.08E1	1	MEAT FREEZER – DOUBLE WIDE – HIGH CAPACITY – RIGHT HAND	120/1	7.0	20A	1/2"C–2#12	AP–2:19	5–15R	SEE RMKS	UNIT PLUGS INTO RACEWAY RECEPTACLE
110.01E1	1	OPTIMIZED BREAKFAST TABLE	–	–	–	–	AP–5:9	–	5'–6"	PLUGS INTO OVERHEAD RECEPTACLE # 320C4W(Y) PROVIDED BY KES– HEIGHT TO BOTTOM OF RECEPTACLE
114.00E1	1	HUMIDIFIED HOLDING CABINET	208/1	9.1	20A	1/2"C–2#12	AP–5:(34,36)	SEE RMKS	5'–6"	PLUGS INTO OVERHEAD RECEPTACLE # 320C6W(B) PROVIDED BY KES – HEIGHT TO BOTTOM OF RECEPTCLE
116.23E4	2	UNIVERSAL HOLDING CABINET – HIGH DENSITY – 2–SIDED – PIN & SLEEVE	208/1	15.2	20A	1/2"C–2#12	AP–5:(4,6)(8,10)	BY KES	5'–6"	PLUGS INTO OVERHEAD RECEPTACLE # 320C6W(B) PROVIDED BY KES – HEIGHT TO BOTTOM OF RECEPTCLE
117.30E1	1	UHC TABLE COPL – 2 SIDED – 51"D x 34"W – PIN&SLEEVE	120/1	2.0	20A	1/2"C–2#12	AP–5:12	BY KES	5'–6"	PLUGS INTO OVERHEAD RECEPTACLE # 320C4W(Y) PROVIDED BY KES– HEIGHT TO BOTTOM OF RECEPTACLE
118.00E1	1	Q'ING OVEN – PIN & SLEEVE	208/1	15.4	20A	1/2"C–2#12	AP–2:(38,40)	SEE RMKS	5'–6"	PLUGS INTO OVERHEAD RECEPTACLE # 320C6W(B) PROVIDED BY KES– HEIGHT TO BOTTOM OF RECEPTACLE
118.03E1	2	Q'ING OVEN – PIN & SLEEVE	208/1	14.9	20A	1/2"C–2#12	AP–2:(18,20)(28,30)	SEE RMKS	5'–6"	PLUGS INTO OVERHEAD RECEPTACLE # 320C6W(B) PROVIDED BY KES– HEIGHT TO BOTTOM OF RECEPTACLE
122.27E1	1	NEXT GEN. UNIVERSAL RADIANT TOASTER –PIN & SLEEVE	208/1	25.2	30A	1/2"C–2#10	AP–5:(27,29)	SEE RMKS	5'–6"	PLUGS INTO OVERHEAD RECEPTACLE # 330C6W(B) PROVIDED BY KES– HEIGHT TO BOTTOM OF RECEPTACLE
122.28E2	1	NEXT GEN. UNIVERSAL CONTACT TOASTER –PIN & SLEEVE	208/1	25.2	30A	1/2"C–2#10	KES BREAKER PANEL	SEE RMKS	SEE RMKS	PLUGS INTO KES RACEWAY RECEPTACLE
123.36E1	1	ECU TABLE – COPL	208/1	4.9	15A	SEE RMKS	KES BREAKER PANEL	SEE RMKS	SEE RMKS	PLUGS INTO KES OUTLET CHASE.
123.37E1	1	BREAKER PANEL– 125 AMP – 1 PHASE – EQUIPMENT MOUNTED	120–208/1	SEE RMKS	125A	1–1/2C"–3#1	MDP:11	–		EC TO EXTEND AND CONNECT ELECTRICAL SERVICE. HARDWIRE TO KES BREAKER PANEL.
123.40E1	1	PREP TABLE – HD – 2–SIDED COPL – 38"D x 83 1/2" – PIN & SLEEVE W/ REF.	120/1	10.0	20A	SEE RMKS	KES BREAKER PANEL	SEE RMKS	SEE RMKS	PLUGS INTO KES OUTLET CHASE.
125.00E2	2	RAPID BUN STEAMER	208/1	14.3	30A	1/2"C–2#10	KES BREAKER PANEL	SEE RMKS	SEE RMKS	PLUGS INTO KES RACEWAY RECEPTACLE
130.00E3	2	COMBI OVEN	208/3	15.1	30A	1/2"C–3#10	AP–4:(2,4,6)(8,10,12)	BY KES	SEE RMKS	EC TO EXTEND CIRCUIT TO L430R9 RECEPTACLE IN CHASE
146.00E1	1	BUTTER WARMER	120/1	0.5	20A	1/2"C–2#12	AP–5:9	BY KES	SEE RMKS	PLUGS INTO EQUIPMENT–MOUNTED RECEPTACLE
152.09E1	1	WAREWASHER – HIGH TEMP	208/3	29.4, 22.3	40A, 30A	3/4"C–3#8, 1/2"C–3#10	AP–5(31,33,35)(37,39,41)	SEE RMKS	SEE RMKS	EC TO SUPPLY 30A & 60A–3P NF DISC SW HANDLE HGT. MTD @ 6'–7" AFF PER NEC 404.8(A). LABEL "WAREWASHER (# OF 2)" IF HOBART IS ORDERED USE (2) 30A BRKRS
163.02E1	4	REMOTE ANSUL PULL	–	–	–	–	–	JB	SEE DETAILS	4" OCTAGONAL, RACO #165 OR EQUAL MUST BE USED.
171.01E1	1	WALK–IN COOLER / FREEZER FLOORLESS	120/1	10.0	20A	1/2"C–2#12	AP–2:14,16	JB	FLUSH ON CLG	JB FOR LIGHTS &]DOOR HEATER– UNSWITCHED LIGHT TO BE IN BOTH COOLER & FREEZER,EC TO CONNECT POWER
171.01E2	1	WALK–IN COOLER / FREEZER FLOORLESS	–	–	–	–	–	–	VIF	EC TO FURNISH & INSTALL CONDUIT,WIRE & LIGHT FIXTURES& OTHER DEVICES INSIDE COOLER/FREEZER BOX
174.48E1	1	REMOTE CONDENSING UNIT	208/1	17.6	25A	1/2"C–2#10	AP–5(38,40)	JB	VIF	EC TO PROVIDE 30A–2P NF DISC AT UNIT ON ROOF. CIRCUIT BREAKERS TO BE HARC RATED.
174.48E2	1	REMOTE CONDENSING UNIT	LOW VOLT WIRES	–	–	–	–	–	VIF	–
174.50E1	1	REMOTE CONDENSING UNIT	208/3	22.4	50A	1"C–3#6	MDP:15	JB	VIF	EC TO PROVIDE 60A–3P NF DISC AT UNIT ON ROOF. CIRCUIT BREAKERS TO BE HARC RATED.
174.50E2	1	REMOTE CONDENSING UNIT	LOW VOLT WIRES	–	–	–	–	–	VIF	–
175.22E1	1	COOLER EVAPORATOR	208/1	1.2	15A	1/2"C–2#12	AP–6:(10,12)	JB	FLUSH ON CLG	–
175.22E2	1	COOLER EVAPORATOR	LOW VOLT WIRES	–	–	–	–	–	FLUSH ON CLG	L V WIRES CONN UNIT TO EVAPS & SHALL BE ROUTED SEPARATELY FROM POWER CONDUCTORS
176.31E1	1	FREEZER EVAPORATOR	208/1	12.0	15A	1/2"C–2#12	AP–6:(14,16)		FLUSH ON CLG	
176.31E2	1	FREEZER EVAPORATOR	LOW VOLT WIRES	–	–	–	–	–	FLUSH ON CLG	L V WIRES CONN UNIT TO EVAPS & SHALL BE ROUTED SEPARATELY FROM POWER CONDUCTORS
177.03E2	1	REACH–IN REFRIGERATOR–SINGLE WIDE	120/1	2.7	20A	1/2"C–2#12	AP–2:31	SEE RMKS	SEE RMKS	EC TO EXTEND CIRCUIT TO 5–20R RECEPTACLE IN CHASE
178.05E1	2	REACH–IN FREEZER–SINGLE WIDE	120/1	11.0	20A	1/2"C–2#12	AP–1:25,30	5–20R	7'–6"	–
181.13E1	1	REFRIGERATOR – SPECIALTY COFFEE– 27" WIDE	120/1	3.9	20A	1/2"C–2#12	AP–2:22	BY KES	SEE RMKS	EC TO EXTEND CIRCUIT TO 5–20R RECEPTACLE IN CHASE
181.14E1	1	REFRIGERATOR – WORK TOP – 48" WIDE	120/1	5.0	20A	1/2"C–2#12	AP–2:8	5–20R	2'–0"	–
183.00E1	2	REFRIGERATOR/FREEZER – 2 DRAWER BASE – 30" W X 33" H	120/1	5.0	20A	1/2"C–2#12	AP–5:1,15	5–20R	2'–0"	–
183.02E1	1	REFRIGERATOR/FREEZER – 2 DRAWER BASE – 30" W X 30" H	120/1	5.0	20A	1/2"C–2#12	AP–5:3	5–20R	2'–0"	–
183.02E2	2	REFRIGERATOR/FREEZER – 2 DRAWER BASE – 30" W X 30" H	120/1	5.0	20A	1/2"C–2#12	AP–5:5,7	BY KES	SEE RMKS	EC TO EXTEND CIRCUIT TO 5–20R RECEPTACLE IN CHASE
183.02E4	1	REFRIGERATOR/FREEZER – 2 DRAWER BASE – 30" W X 30" H	120/1	5.0	20A	1/2"C–2#12	AP–5:9	BY KES	SEE RMKS	PLUGS INTO EQUIPMENT–MOUNTED RECEPTACLE
196.06E1	1	SAFE – STANDARD BLDG.	120/1	1.0	20A	1/2"C–2#12	AP–1:7	5–20R	2'–0"	PROVIDE LOCKOUT TYPE CB

ELECTRICAL SCHEDULE

PB = Pullbox
JB = Junction Box
EC = Electrical Contractor
VIF = Verify in Field

TAG #	QTY	DESCRIPTION	VOLT/PH	FLA	BRK SIZE	COND/WIRE	PNL/CCT	RECEP TYPE	HGT AFF	REQUIREMENTS & REMARKS
197.01E1	1	HAND WASH TIMER	120/1	0.1	20A	1/2"C–2#12	AP–1:33	5–20R	4'–6"	–
203.01E1	1	HEAT TREAT COMBINATION SHAKE/SUNDAE MACHINE	208/3	13.0	30A	3/4"C–3#8	AP–1:(18,20,22)	4x4x4 PB	1'–0"	RECEP #A460R9 BY KES, IF TAYLOR C602 IS ORDERED USE A 40A BRKR & #6 CONDUCTORS –EC MAKES FINAL CONN
205.08E1	1	BIC MACHINE	120/1	8.6	20A	1/2"C–2#12	AP–2:29	BY KES	SEE RMKS	EC TO EXTEND DEDICATED CIRCUIT TO 5–20R RECEPTACLE IN CHASE
205.09E2	1	FROZEN BEVERAGE DISPENSER	208/1	20.0	30A	1/2"C–2#10	AP–5:(17,19)	SEE RMKS	SEE RMKS	RECEP L6–30R IN CHASE BY KES, EC MAKES FINAL CONN
207.01E2	1	BLENDER – MCFLURRY – RAIL MOUNT	120/1	1.2	20A	1/2"C–2#12	AP–2:7	5–20R	4'–0"	
211.00E6	1	DELIVERY TABLETS	120/1	3.0	20A	1/2"C–2#12	AP–5:21	(2) 5–20R	5'–6"	–
214.02E1	1	82" 44U STATIONARY RACK	120/1 ISOLATED	5.0	20A	1/2"C–2#12IG	CP:11	IG4700	2'–0"	FOR NETWORK HARDWARE (GATEWAY/CONTROLLER, SWITCHES & HUBS)
214.02E3	1	82" 44U STATIONARY RACK	120/1 ISOLATED	10.0	20A	1/2"C–2#12IG	CP:15	IG4700	2'–0"	FOR POS SYSTEM SERVERS
214.02E4	1	82" 44U STATIONARY RACK	120/1 ISOLATED	12.0	20A	1/2"C–2#12IG	CP:17	IG2310	4'–0"	FOR OTHER POS SYSTEM & BACK OFFICE HARDWARE
214.02E5	1	82" 44U STATIONARY RACK	DATA CABLE	–	–	–	–	8x6x4 PB	7'–6"	EXTEND (2) 2 1/2" CONDUIT ABOVE CLG. W/BUSHING FOR DATA CABLES
214.02E6	1	82" 44U STATIONARY RACK	120/1 ISOLATED	14.0	30A	1/2"C–2#10IG	CP:12	IG2610	3'–0"	FOR POS SYSTEM UPS
215.00E12	1	POS REGISTER – FRONT COUNTER	120/1 ISOLATED	3.0 EA.	–	3/4"C–2#12IG	CP:19	IG4700	SEE RMKS	PROVIDE IG RECEP. IN COUNTER–MOUNTED RACEWAY
215.00E3	1	POS REGISTER – FRONT COUNTER	DATA CABLE	–	–	–	–	4x4x4 PB	10"	EXTEND 2" CONDUIT TO ABOVE CEILING FOR POS DATA CABLES
215.02E1	1	POS REGISTER – 2 WINDOW D/T	120/1 ISOLATED	3.0 EA.	SEE RMKS	1/2"C–2#12IG	SEE REMARKS	(2)IG4700	2'–5"	IN ORDER BOOTH, CONNECT TO CP:7 – IF INCLUDED IN PRESENTERS BOOTH, CONNECT TO CP:8
215.02E10	2	POS REGISTER – 2 WINDOW D/T	120/1 ISOLATED	3.0 EA.	20A	1/2"C–2#12IG	CP:1	BY KES	SEE RMKS	EC TO EXTEND CIRCUIT TO IG4700 RECEPTACLE IN CHASE
215.02E12	1	POS REGISTER – 2 WINDOW D/T	–	–	–	–	–	18x12x4 PB	10"	REFER TO D/T LOW VOLTAGE CONDUIT DIAGRAM FOR CONDUITS UNDER SLAB AND EXTEND (2) 2 1/2"C. TO ABOVE CLG.
215.02E13	1	POS REGISTER – 2 WINDOW D/T	–	–	–	–	–	4x4x4 PB	10"	EXTEND 1 1/2"C. UNDER SLAB TO 217.11E1 AND 2 1/2" C. TO ABOVE CEILING FOR POS DATA CABLES
215.02E17	1	POS REGISTER – 2 WINDOW D/T	–	–	–	–	–	4x4x4 PB	10"	EXTEND 1 1/2"C. UNDER SLAB TO 217.11E1 AND 2 1/2" C. ABOVE TO 215.02E18
215.02E18	1	POS REGISTER – 2 WINDOW D/T	–	–	–	–	–	4x4x4 PB	5'–0"	EXTEND 2 1/2" C. BELOW TO 215.02E17 AND 2 1/2" C. TO ABOVE CEILING FOR POS DATA CABLES
215.04E1	2	POS – KVS MONITOR	120/1 ISOLATED	1.5 EA.	20A	1/2"C–2#12IG	CP:8	IG4700	FLUSH ON CLG	–
215.04E4	2	POS – KVS MONITOR	120/1 ISOLATED	1.5	20A	1/2"C–2#12IG	CP:26	SEE RMKS	SEE RMKS	EC TO EXTEND CIRCUIT TO IG4700 RECEPTACLE IN OEP
215.04E5	2	POS – KVS MONITOR	120/1 ISOLATED	1.5 EA.	20A	1/2"C–2#12IG	CP:3	SEE RMKS	SEE RMKS	EC TO EXTEND CIRCUIT TO IG4700 RECEPTACLE IN CHASE
215.04E7	3	POS – KVS MONITOR	120/1 ISOLATED	1.5 EA.	20A	1/2"C–2#12IG	CP:23	IG4700	5'–6"	–
215.04E8	1	POS – KVS MONITOR	DATA CABLE	–	–	–	–	4x4x4 PB	4'–0"	EXTEND 2" CONDUIT ABOVE CEILING. CABLE FURNISHED AND INSTALLED BY POS SYSTEM SUPPLIER
215.07E1	1	POS REGISTER – DELIVERY	120/1 ISOLATED	3.0	20A	1/2"C–2#12IG	CP:23	IG4700	3'–6"	
215.07E3	1	POS REGISTER – DELIVERY	DATA CABLE	–	–	–	–	4x4x4 PB	3'–6"	EXTEND 2" CONDUIT TO ABOVE CEILING FOR POS DATA CABLES
216.00E13	2	POS – VIDEO MONITOR	120/1 ISOLATED	1.5 EA.	20A	1/2"C–2#12IG	CP:3	SEE RMKS	SEE RMKS	EC TO EXTEND CIRCUIT TO IG4700 RECEPTACLE IN CHASE
216.00E14	4	POS – VIDEO MONITOR	120/1 ISOLATED	1.5 EA.	20A	1/2"C–2#12IG	CP:9	IG4700	SEE RMKS	EXTEND CONDUIT DOWN GRILL HOOD SHROUD AND PROVIDE IG4700 RECEPTACLE
216.00E7	3	POS – VIDEO MONITOR	120/1 ISOLATED	1.5 EA.	20A	1/2"C–2#12IG	CP:1	BY KES	SEE RMKS	EC TO EXTEND CIRCUIT TO IG4700 RECEPTACLE IN CHASE
217.03E4	1	POS – COD OPTICAL ISOLATOR	120/1 ISOLATED	1.0	20A	1/2"C–2#12IG	CP:14	IG5262	7'–6"	–
217.10E1	2	REMOTE DETECTOR LOOP	–	–	–	–	–	–	–	1 1/2"CONDUIT–CONN TO PULLBOX#215.03E5,215.01E4, OR 215.02E12 PER DRIVE–THRU CONFIG–SEE SITE PLAN
217.11E1	2	DETECTOR LOOP	–	–	–	–	–	–	–	1 1/2"CONDUIT–CONN TO PULLBOX#215.02E5,215.02E13, OR 215.02E4 PER DRIVE–THRU CONFIG–SEE SITE PLAN
217.13E1	1	MERGE POINT MONITOR (DOUBLE DRIVE THRU)	120/1	2.0	20A	1/2"C–2#12	AP–1:11	5–20R	3'–6"	DO NOT POWER FROM POS CIRCUIT
217.13E2	2	MERGE POINT MONITOR (DOUBLE DRIVE THRU)	120/1	2.0	20A	1/2"C–2#12	AP–1:11	BY KES	SEE RMKS	EC TO EXTEND CIRCUIT TO 5–20R RECEPTACLE IN CHASE
217.14E1	1	POS– VIDEO MONITOR (DOUBLE DRIVE THRU)	120/1 ISOLATED	1.5	SEE RMKS	1/2"C–2#12IG	CP:7	IG4700	3'–6"	–
217.18E1	3	HAND HELD ORDER TAKER AND MANAGEMENT OF SHIFT EQUIPMENT	120/1	5.0	20A	1/2"C–2#12	AP–1:15	5–20R	4'–6"	–
217.19E2	1	WIRELESS HEADSET BASE STATION	120/1 ISOLATED	1.9	20A	1/2"C–2#12IG	CP:1	IG4700	4'–6"	
217.19E3	1	WIRELESS HEADSET BASE STATION	DATA CABLE	–	–	–	–	4x4x4 PB	5'–0"	
217.24E1	1	DANGER POINT MONITOR (DOUBLE DRIVE–THRU)	120/1	2.0	20A	1/2"C–2#12	AP–1:11	5–20R	8'–0"	DO NOT POWER FROM POS CIRCUIT
217.26E1	1	ZOOM TIMER	120/1 ISOLATED	6.0	20A	1/2"C–2#12IG	CP:10	(2) IG4700	7'–6"	–
217.26E2	1	ZOOM TIMER	DATA CABLE	–	–	–	–	JB	7'–6"	JB W/ 1–1/2" C. TO TERMINATE ABOVE CEILING W/BUSHINGS. FOR DATA CABLES. SUPPLY W/ GROMMETED OPENING IN COVER PLATE
219.00E10	1	POS – RECEIPT PRINTER	120/1 ISOLATED	0.7	20A	3/4"C–2#12IG	SEE RMKS	IG4700	SEE RMKS	PROVIDE IG RECEP. IN COUNTER–MOUNTED RACEWAY, POWER FROM SAME CIRCUIT AS 215.00E12
219.00E3	1	POS – RECEIPT PRINTER/CASHLESS	120/1 ISOLATED	0.7	20A	1/2"C–2#12IG	CP:4	IG4700	2'–0"	–
219.00E7	2	POS – RECEIPT PRINTER	120/1 ISOLATED	0.7	20A	1/2"C–2#12IG	CP:3	BY KES	SEE RMKS	EC TO EXTEND IG CIRCUIT TO IG4700 RECEPTACLE IN KES OUTLET CHASE.
219.05E1	1	STICKY LABEL PRINTER	120/1 ISOLATED	0.7	20A	1/2"C–2#12IG	CP:3	BY KES	SEE RMKS	EC TO EXTEND IG CIRCUIT TO IG4700 RECEPTACLE IN KES OUTLET CHASE.
219.05E2	1	STICKY LABEL PRINTER	120/1 ISOLATED	0.7	20A	1/2"C–2#12IG	CP:1	BY KES	SEE RMKS	EC TO EXTEND IG CIRCUIT TO IG4700 RECEPTACLE IN CHASE
219.05E3	1	STICKY LABEL PRINTER	120/1 ISOLATED	0.7	20A	1/2"C–2#12IG	CP:3	IG4700	3'–2"	–
219.05E6	2	STICKY LABEL PRINTER	120/1 ISOLATED	0.7	20A	1/2"C–2#12IG	CP:3	IG4700	FLUSH ON CLG	–
219.06E1	1	LABELING SYSTEM	120/1 ISOLATED	2.0	20A	1/2"C–2#12IG	CP:8	IG5261	2'–0"	–
220.00E1	1	POS – COIN DISPENSER	120/1 ISOLATED	0.75	20A	1/2"C–2#12IG	CP:7	IG4700	2'–0"	–
221.09E1	1	O/O EQUIPMENT RACK	120/1 ISOLATED	4.0	20A	1/2"C–2#12IG	CP:31	IG5262	8'–0"	–
221.09E2	1	O/O EQUIPMENT RACK	DATA CABLE	–	–	2" C	–	4x4x4 PB	8'–0"	EXTEND 2" CONDUIT ABOVE CLG. W/ BUSHING FOR DATA CABLES
222.01E1	1	TIME CLOCK	120/1 ISOLATED	0.5	20A	1/2"C–2#12IG	CP:28	IG4700	4'–0"	–
222.01E2	1	TIME CLOCK	DATA CABLE	–	–	–	–	JB	4'–0"	EXTEND 1" CONDUIT ABOVE CEILING
223.07E1	1	WASHER	120/1	8.0	15A	1/2"C–2#12	AP–1:13	5–15R	3'–6"	–
225.03E3	2	OFFICE PACKAGE/DESK UNIT	120/1 ISOLATED	10.0	20A	1/2"C–2#12IG	CP:20,22	IG5262	4'–6"	FOR MONITOR, PRINTER AND THIN CLIENT
225.03E4	1	OFFICE PACKAGE/DESK UNIT	DATA CABLE	–	–	–	–	4x4x4 PB	4'–6"	EXTEND 2 1/2" CONDUIT ABOVE CLG. W/BUSHING FOR DATA CABLE
226.00E2	1	CREW MICROWAVE & REFRIGERATOR	120/1	10.0	20A	1/2"C–2#12	AP–6:26	5–20R	1'–6"	EC TO PROVIDE DEDICATED CIRCUIT FOR CREW MICROWAVE AND REFRIGERATOR
226.09E2	1	CREW SMART LOCKERS	120/1	1.7	20A	1/2"C–2#12	AP–6:28	5–20R	2'–0"	–
237.00E2	1	PIE DISPLAY	120/1	4.7	20A	1/2"C–2#12	AP–5:24	5–20R	5'–5"	–
237.00E4	1	PIE DISPLAY	120/1	4.7	20A	1/2"C–2#12	AP–5:26	BY KES	SEE RMKS	EC TO EXTEND CIRCUIT TO KES OUTLET IN CHASE
700.07E1	1	WATER HEATER – GAS	120/1	4.0	20A	1/2"C–2#12	AP–2:11	JB	SEE RMKS	EC TO VERIFY JB HEIGHT IN FIELD – EC TO PROVIDE PADLOCKABLE DEVICE AT CCT BRKR PER NEC 422.31
700.09E1	1	ECONOMY OEP BOX W/MOUNTING HARDWARE	–	–	–	–	–	BY KES	SEE RMKS	CEILING MOUNTED
700.10E1	1	BULK OIL SYSTEM	120/1	7.2, 10.0	(2) 20A	1/2"C– 2#12	AP–2:15,27	(2)5–20R	8'–0"	PROVIDE DOUBLE DUPLEX WALL PLATE. FOR OIL PUMP AND RECIRCULATION HEATING SYSTEM
700.10E2	1	BULK OIL SYSTEM	120/1	6.9	20A	1/2"C–2#12	AP–5:25	5–20R	1'–6"	FOR GRILL GREASE PUMP
700.10E3	1	BULK OIL SYSTEM	PHONE BOX	–	–	–	–	RJ–11C JACK	8'–0"	TELEPHONE LINE FOR TELEMETRY SYSTEM
700.11E1	1	OEP UTILITY PANEL W/ MOUNTING HARDWARE – STATIC BOX	–	–	–	–	–	–	SEE RMKS	SUPPLIED WITH RECEPTACLES,ITEM MOUNTS ON CEILING
701.01E1	2	HAND DRYER	120/1	9.1	20A	1/2"C–2#12	AP–6:2,4	JB	SEE RMKS	INSTALL JB AT A MOUNTING HGT. THAT RESULTS IN DRYER BOTTOM EDGE TO BE AT 44" AFF.
701.13E1	3	DCO – GENERAL PURPOSE	120/1	1.5	20A	1/2"C–2#12	AP–1:5	5–20R	4'–6"	CONTROL VIA CONTACTOR PANEL. PERMANENTLY MARK RECEP.
701.13E14	2	DCO – GENERAL PURPOSE	120/1	1.7	20A	1/2"C–2#12	AP–1:1	5–20R	4'–6"	CONTROL VIA CONTACTOR PANEL. PERMANENTLY MARK RECEP. PROVIDE USB CHARGER RECEP., HUBBELL USB20X2* AND DEEP BOX AS REQ.
701.13E18	1	DCO – GENERAL PURPOSE	120/1	1.5	20A	1/2"C–2#12	AP–1:3	5–20R	4'–6"	–
701.13E19	1	DCO – GENERAL PURPOSE	120/1	1.7	20A	1/2"C–2#12	AP–1:1	5–20R	1'–6"	CONTROL VIA CONTACTOR PANEL. PERMANENTLY MARK RECEP. PROVIDE USB CHARGER RECEP., HUBBELL USB20X2* AND DEEP BOX AS REQ.
701.13E2	2	DCO – GENERAL PURPOSE	120/1	1.7	20A	1/2"C–2#12	AP–1:1	5–20R	3'–6"	CONTROL VIA CONTACTOR PANEL. PERMANENTLY MARK RECEP. PROVIDE USB CHARGER RECEP., HUBBELL USB20X2* AND DEEP BOX AS REQ.
701.13E3	3	DCO – GENERAL PURPOSE	120/1	1.5	20A	1/2"C–2#12	AP–2:6	5–20R	1'–6"	–
701.13E4	2	DCO – GENERAL PURPOSE	120/1	3.0	20A	1/2"C–2#12	AP–1:3	(2) 5–20R	FLUSH ON CLG	PROVIDE DOUBLE DUPLEX WALL PLATE
701.13E9	4	DCO – GENERAL PURPOSE	120/1	1.5	20A	1/2"C–2#12	AP–2:42	5–20R	1'–6"	–
701.14E1	1	TELEPHONE	PHONE BOX	–	–	–	–	RJ–11C JACK	4'–6"	–
701.14E3	1	TELEPHONE	PHONE BOX	–	–	–	–	RJ–11C JACK	3'–6"	–
701.15E1	1	DOOR BUZZER	120/1	.5	20A	1/2"C–2#12	LP–1:16	–	8'–0"	CONNECT TRANSFORMER TO POWER & ROUTE LOW VOLTAGE WIRES OVERHEAD TO DOOR BUTTON

LINGLE DESIGN GROUP INC
158 WEST MAIN STREET
LENA, IL 61048
815.369.9155
1764 BLAKE ST
DENVER, CO 8020
303.974.5873
WWW.LINGLEDESIGN.COM

DICKERSON ENGINEERING, INC.
Professional Electrical Engineers
3343 NORTH RIDGE AVENUE
ARLINGTON HEIGHTS, IL 60004
TEL (847) 966-0290
WWW.DEI-PE.COM
ILLINOIS REGISTERED DESIGN FIRM # 184-000949

© ALL DRAWINGS AND WRITTEN MATERIAL CONTAINED HEREIN ARE THE PROPERTY OF THE LINGLE DESIGN GROUP, INC. THEY MAY NOT BE REVISED, COPIED, REUSED, OR DISCLOSED IN ANY MANNER WITHOUT WRITTEN AUTHORIZATION FROM THE ARCHITECT.

AUGUST HERNANDEZ LICENSED 27273 KANSAS PROFESSIONAL ENGINEER

SIGNATURE

07/28/2026 DATE
04/30/2028 EXPIRATION DATE
COVERING ELECTRICAL DESIGN

STATE ID: 150405
PROJECT #: 25-079
NATIONAL #: 44936
DRAWN BY: DEI
CHECKED BY: AH/RS

DATE:
10/15/2025 - PERMIT / BID SET

REVISIONS
1. 11/12/25 - QC COMMENTS/PROTO UPDATE
2. 02/23/2026 - CITY COMMENTS
3. 03/10/2026 - DECOR UPDATE
4. 08/02/26 - OWNER COMMENTS / PROTOTYPE UPDATES

CLIENT
McDonald's USA, LLC

PROTOTYPE
BB20 4590 MS-HB
ISSUE DATE 08/27/25

ADDRESS
2320 METROPOLITAN AVE
KANSAS CITY, KS 66106

SHEET TITLE
ROUGH-IN SCHEDULE

SHEET NUMBER:
E3.0

PB = Pullbox VIF = Verify in Field
JB = Junction Box
EC = Electrical Contractor

ELECTRICAL SCHEDULE

TAG #	QTY	DESCRIPTION	VOLT/PH	FLA	BRK SIZE	COND/WIRE	PNL/CCT	RECEP TYPE	HGT AFF	REQUIREMENTS & REMARKS
701.27E1	1	DCO-SATELLITE MUSIC SYSTEM	120/1	1.0	20A	1/2"C-2#12	AP-5:30	(2) 5-20R	3'-0"	PROVIDE DOUBLE DUPLEX WALL PLATE
701.32E1	1	REMOTE ORDER TAKER BATTERY PACK	120/1	2.0	20A	1/2"C-2#12	AP-1:9	(2) 5-20R	4'-6"	PROVIDE DOUBLE DUPLEX WALL PLATE. FIELD VERIFY HEIGHT AND LOCATION WITH ACM
701.34E1	1	ACCESS CONTROL PANEL	120/1	2.0	20A	1/2"C-2#12	LP-1:16	JB	8'-0"	ROUTE LOW VOLTAGE WIRES TO DOOR BUTTON, HORN AND DOOR STRIKE AS REQUIRED. SUPPLY WITH 4 RELAY CONTROL BOARD.

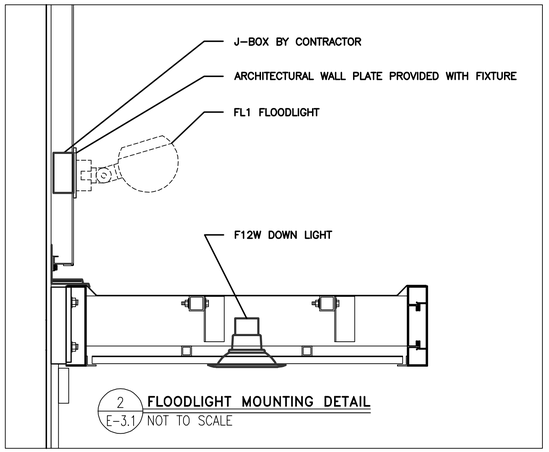

2 FLOODLIGHT MOUNTING DETAIL
E-3.1 NOT TO SCALE

REMOTE ANSUL PULL STATION FOR REFERENCE

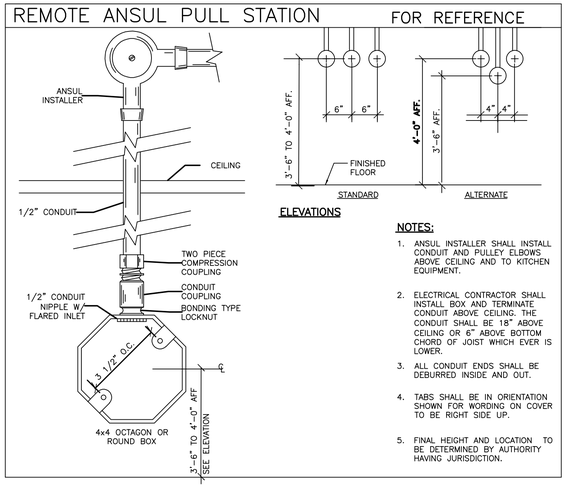

ELEVATIONS

NOTES:
1. ANSUL INSTALLER SHALL INSTALL CONDUIT AND PULLEY ELBOWS ABOVE CEILING AND TO KITCHEN EQUIPMENT.
2. ELECTRICAL CONTRACTOR SHALL INSTALL BOX AND TERMINATE CONDUIT ABOVE CEILING. THE CONDUIT SHALL BE 18" ABOVE CEILING OR 6" ABOVE BOTTOM CHORD OF JOIST WHICH EVER IS LOWER.
3. ALL CONDUIT ENDS SHALL BE DEBURRED INSIDE AND OUT.
4. TABS SHALL BE IN ORIENTATION SHOWN FOR WORDING ON COVER TO BE RIGHT SIDE UP.
5. FINAL HEIGHT AND LOCATION TO BE DETERMINED BY AUTHORITY HAVING JURISDICTION.

GENERAL ELECTRICAL NOTES:

POST CONSTRUCTION ENERGY CODE REQUIREMENTS:

PC1. EC SHALL FURNISH AS-BUILT DRAWINGS FOR ELECTRICAL POWER SYSTEMS WITHIN 30 DAYS OF SYSTEM ACCEPTANCE.

PC2. EC SHALL FURNISH O&M INSTRUCTIONS FOR SYSTEMS AND EQUIPMENT TO THE BUILDING OWNER OR DESIGNATED REPRESENTATIVE.

PC3. EC SHALL PROVIDE WRITTEN VERIFICATION THAT LIGHTING SYSTEMS HAVE BEEN TESTED TO ENSURE PROPER CALIBRATION, ADJUSTMENT, PROGRAMMING AND OPERATION.

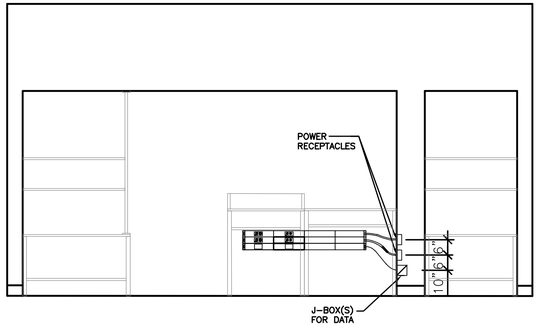

SYMBOL	CATALOG #	DESCRIPTION
	HBLALU57DR & IG4700	RECEPTACLE COVERPLATE WITH ORANGE, TWIST LOCK, ISOLATED GROUND DUPLEX RECEPTACLE
	HBLALU57DR & 5-20R FOR BAKED GOODS AND IG5262 FOR CASH	RECEPTACLE COVERPLATE WITH STRAIGHT BLADE RECEPTACLE
	HBLALU57LPB	COMMUNICATIONS COVERPLATE
	HBLALU7620B02M290	2' SECTION OF RACEWAY. INCLUDES COUPLERS
	HBLALU7620B03M290	3' SECTION OF RACEWAY. INCLUDES COUPLERS
	HBLALU7610B2M2	SERVICE ENTRANCE FITTING & BUSHING FOR DATA CABLES
	HBLALU7610B	BLANK END FITTING
N/A	HBLALU5701	COUPLER (INCLUDED WITH RACEWAY SECTION)
N/A	HBLALU5709	GROUND ADAPTER

NOTES:
1. REFER TO SERVICE POD MANUFACTURER INSTRUCTIONS FOR EXACT PLACEMENT OF RACEWAY

2. RACEWAY AND RECEPTACLES TO BE PROVIDED WITH SERVICE POD, INSTALLED BY CONTRACTOR.

3. DETAIL SHOWN IS A TYPICAL CONFIGURATION ONLY. SITE SPECIFICS MIGHT CAUSE DEVIATIONS.

4. PART NUMBERS SHOWN REFLECT HUBBELL, SOME SUPPIERS MAY USE WIREMOLE EQUIVALENT.

1 SERVICE POD RACEWAY DETAIL
E-3.1 NOT TO SCALE

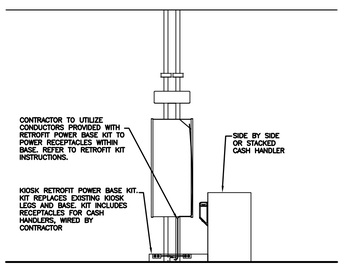

NOTES:
1. THIS EXAMPLE IS FOR A SIDE BY SIDE CASH HANDLER THAT DOES NOT HAVE A GC WALL BEHIND IT AND IS NEXT TO A KIOSK. IT IS ALSO INTENDED FOR ALL STACKED CASH HANDLERS.
2. EACH SIDE BY SIDE CASH HANDLER UTILIZES 3 PLUGS AND ADDS 4.4 AMPS OF LOAD TO THE KIOSK CIRCUIT.
3. EACH STACKED CASH HANDLER UTILIZED 2 PLUGS AND ADDS 3.6 AMPS OF LOAD TO THE KIOSK CIRCUIT.
4. ONLY 1 SIDE BY SIDE CAN BE CONNECTED TO A KIOSK, HOWEVER TWO STACKED UNITS CAN BE CONNECTED. REFER TO DECOR PLANS FOR EXACT CONFIGURATIONS.

5 TYP. CASH HANDLER POWER DETAIL
E-3.1 NOT TO SCALE

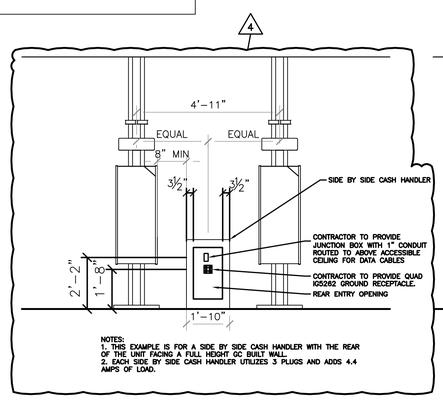

NOTES:
1. THIS EXAMPLE IS FOR A SIDE BY SIDE CASH HANDLER WITH THE REAR OF THE UNIT FACING A FULL HEIGHT GC BUILT WALL.
2. EACH SIDE BY SIDE CASH HANDLER UTILIZES 3 PLUGS AND ADDS 4.4 AMPS OF LOAD.

4 CASH HANDLER POWER DETAIL W/REAR TO WALL
E-3.1 NOT TO SCALE

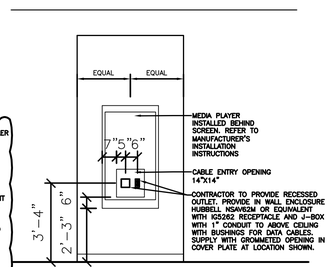

NOTES:
1. THIS EXAMPLE IS FOR A WALL MOUNTED DIGITAL MERCHANDISER.

3 MERC POWER DETAIL
E-3.1 NOT TO SCALE

GENERAL ELECTRICAL NOTES:

INSTALLATION METHODS:

M1. ALL ELECTRICAL MATERIAL USED ON THIS PROJECT SHALL BE "UL" LISTED AND LABELED.

M2. ALL DIMENSIONS SHOWN ARE TAKEN FROM FACE OF GYP BOARD/PLYWOOD. THE EC SHALL MAKE NECESSARY DIMENSIONAL ALLOWANCES. ALL DIMENSIONS SHOWN ARE TO CENTER LINE OF OUTLET BOX AND/OR RECEPTACLE UNLESS NOTED OTHERWISE.

M3. ALL J-BOXES, DCOs, AND OTHER ELECTRICAL DEVICES SHOWN SHALL BE RECESSED INTO A WALL, FLOOR OR CEILING UNLESS SPECIFICALLY NOTED OTHERWISE.

M4. ALL RECEPTACLES (EXCEPT SPECIFIED HUBBELL PIN & SLEEVE TYPES) SHALL BE FURNISHED BY THE EC. THE RECEPTACLES INCLUDING PIN AND SLEEVE TYPE SHALL BE INSTALLED BY THE EC.

M5. EC SHALL PROVIDE STAINLESS STEEL COVER PLATES ON ALL RECEPTACLES AND J-BOXES. ADDITIONALLY, EC SHALL PROVIDE ORANGE NYLON COVER PLATES MARKED "COMPUTER ONLY" ON ALL ISOLATED GROUND/DEDICATED CIRCUIT RECEPTACLES. PURCHASE PJ8CO (ONE DUPLEX) OR PJ82CO (TWO DUPLEX) FROM HUBBELL.

M6. ROUGH-INS FOR OPTIONAL EQUIPMENT ARE SHOWN ON THESE SHEETS. EC SHALL VERIFY WITH McDONALD'S PROJECT MANAGER WHICH OPTIONAL EQUIPMENT IS TO BE INCLUDED AND INSTALL OPTIONAL ROUGH-INS AS REQUIRED. PRICING FOR OPTIONAL ROUGH-INS SHALL BE INCLUDED IN BID AND CALLED OUT AS OPTIONAL.

M7. EC SHALL COORDINATE WITH KITCHEN EQUIPMENT SUPPLIER, MECHANICAL CONTRACTOR AND GC FOR FINAL LOCATIONS AND CONNECTION REQUIREMENTS OF ALL EQUIPMENT PRIOR TO INSTALLATION OF ANY CONDUIT AND/OR STUB-UP LOCATIONS.

M8. CEILING MOUNTED ECONOMY OEP BOX IS FURNISHED BY McDONALD'S, AND INSTALLED BY THE GC. CORD AND PLUG SET FURNISHED BY KES AND INSTALLED BY THE EC.

M9. FOR GRILLS, FRYERS, AND ANSUL SYSTEMS, EC SHALL EXTEND CONDUIT AND CONDUCTORS DOWN CHASE OR WALL TO TERMINAL BLOCK MOUNTED ON EQUIPMENT AND MAKE FINAL CONNECTIONS TO TERMINAL BLOCKS.

M10. ALL HOLES IN THE FRONT COUNTER FOR THE POS CORDS AND CABLES SHALL BE LOCATED BY OWNER AND DRILLED BY GC.

M11. ALL ELECTRICAL CONDUCTORS SHALL BE CONNECTED TO RECEPTACLES USING ONLY THE TERMINAL SCREWS. RECEPTACLE BACK WIRE/QUICK CONNECTIONS SHALL NOT BE USED. HUBBELL EDGE CONNECT IS APPROVED ALTERNATE.

M12. EC SHALL PROVIDE 208V HEAT TRACE ON THE FREEZER EVAPORATOR CONDENSATE DRAIN LINE. HEAT TRACE SHALL OPERATE CONTINUOUSLY. EC SHALL WIRE HEAT TRACE TO FREEZER EVAPORATOR POWER SUPPLY. A SEPARATE CIRCUIT FOR HEAT TRACE IS NOT REQUIRED. VERIFY HEAT TRACE REQUIREMENTS WITH EVAPORATOR MANUFACTURER

M13. POWER AND CONTROL CORDS ARE FURNISHED WITH KITCHEN APPLIANCES. THE EC SHALL CONNECT CORD SETS TO APPLIANCES AS REQUIRED.

M14. GC SHALL NOT INSTALL CEILING TILE IN AREAS OF THE BEVERAGE BAR REFRIGERATION LINES AND EQUIPMENT PENETRATION LOCATIONS UNTIL THE LINES HAVE BEEN INSTALLED. THE CEILING TILE INSTALLER SHALL RETURN AND INSTALL THE TILES AFTER THE REFRIGERATION LINES HAVE BEEN INSTALLED AND TESTED.

UTILITIES:

U1. INCOMING SERVICE SHALL BE 208Y/120V, 3 PHASE, 4 WIRE. ANY DEVIATIONS TO THIS SERVICE TYPE SHALL NOT BE PERMITTED UNLESS APPROVED IN WRITING BY McDONALD'S.

U2. THE EC SHALL ARRANGE WITH THE ELECTRIC, TELEPHONE, AND OTHER UTILITY COMPANIES FOR INCOMING SERVICE REQUIREMENTS AND SHALL INCLUDE ALL COSTS IN BASE BID.

U3. THE EC SHALL VERIFY EXACT METHODS AND REQUIREMENTS FOR ELECTRICAL SERVICE WITH LOCAL UTILITY COMPANY. CURRENT TRANSFORMERS SHALL BE INSTALLED OUTSIDE RESTAURANT, LOCATE INSIDE ONLY IF REQUIRED BY UTILITY COMPANY OR LOCAL AUTHORITIES.

U4. PROVIDE CONCRETE PAD IF TRANSFORMER IS LOCATED ON GRADE AND PROVIDE SECONDARY SERVICE FEEDER AND CONDUITS TO PANEL MDP AS PER LOCAL UTILITY REQUIREMENTS.

U5. THE EC/GC/ACM SHALL OBTAIN AVAILABLE SHORT CIRCUIT CURRENT FROM THE LOCAL UTILITY COMPANY. THE EC/GC/ACM SHALL ADVISE IN WRITING (FAX SUPPLIER THE UTILITY LETTER) THE AVAILABLE AMOUNT OF FAULT CURRENT. THE PANELBOARD SUPPLIER SHALL BE RESPONSIBLE TO VERIFY THAT THE ELECTRICAL EQUIPMENT SHIPPED HAS APPROPRIATE ELECTRICAL RATINGS WHICH ARE EQUAL TO OR GREATER THAN THE AVAILABLE AMOUNT OF FAULT CURRENT AT THE SITE.

U6. EC AND ACM OR OWNER/OPERATOR AND ACM SHALL COORDINATE WITH LOCAL PHONE COMPANY TO PROVIDE A 10 PAIR (OR MORE) COPPER TELEPHONE CABLE FROM THE TELEPHONE UTILITY EASEMENT TO THE RESTAURANT TELEPHONE DEMARCATION POINT. IF THE TELEPHONE PANEL/BOX IS LOCATED INSIDE THE RESTAURANT, EC SHALL PROVIDE (2) EMPTY 3/4" CONDUITS FROM THE TELEPHONE PANEL/BOX UP TO ABOVE THE CEILING FOR FUTURE TELEPHONE CABLE INSTALLATION. ADDITIONALLY, THE EC SHALL PROVIDE AN EMPTY 3/4" CONDUIT FROM THE TELEPHONE PANEL/BOX TO THE LOCATION OF THE FUTURE INTERNET SERVER (VERIFY LOCATION WITH PM). EC SHALL CONNECT, INSTALL AND INCORPORATE ALL OTHER REQUIREMENTS NECESSARY FOR COMPLETE AND OPERATIONAL TELEPHONE SYSTEM(S) FOR THIS SITE. THE REMAINING UNUSED TELEPHONE CONDUCTOR PAIRS SHALL BE CAPPED AND LEFT IN PLACE FOR FUTURE USE. THE TELEPHONE PANEL/BOX SHALL BE GROUNDED AS SHOWN IN THE "BUILDING ELECTRICAL GROUNDING DETAIL."

U7. EC SHALL PROVIDE A 4" SCHEDULE 40/80 PVC CONDUIT THAT IS SUITABLE FOR DIRECT BURIAL FROM BUILDING TO UTILITY EASEMENT/ROW IN UTILITY CABLING/CONDUIT TRENCH PROVIDED BY GC. CONDUIT SHALL RUN FROM INCOMING TELCOM LOCATION AT BUILDING TO TELECOM PEDESTAL LOCATION IN UTILITY EASEMENT/ROW. VERIFY EXACT LOCATIONS IN FIELD WITH AREA CONSTRUCTION MANAGER AND TELECOM UTILITY PROVIDER PRIOR TO INSTALLATION.

INSTALLATION NOTES:

1. IF TELCOM CONDUIT IS TERMINATED WITHIN BUILDING, PVC SHALL TRANSITION TO HWG/RMC TYPE CONDUIT PRIOR TO RISING ABOVE FINISHED SLAB.
2. PROVIDE THERMOPLASTIC BUSHINGS AT BOTH ENDS OF CONDUIT FOR CABLING PROTECTION.
3. IF 90 DEGREE BENDS ARE REQUIRED, CONTRACTOR SHALL PROVIDE WIDE SWEEPING BENDS TO PREVENT BENDING/DAMAGE TO CABLE
4. ALL COMMUNICATIONS CABLING SHALL BE PULLED VIA THIS CONDUIT.
5. INSTALL A MINIMUM OF 6 PULL WIRES IN CONDUIT TO ALLOW FOR THE INSTALLATION OF FUTURE CABLING. USE NON-DEGRADING POLYPROPYLENE OR MONOFILAMENT PLASTIC LINE OR #12 AWGT SOLID COPPER CONDUCTORS WITH NOT LESS THAN 200 LBF TENSILE STRENGTH. PROVIDE AT LEAST 12 INCHES OF SLACK AT EACH END OF PULL WIRE
6. AFTER INSTALLATION OF COMMUNICATIONS CABLING AND PULLSTRINGS/WIRES, CONTRACTOR SHALL SEAL BOTH ENDS OF CONDUIT TO PREVENT INTRUSION FROM WEATHER, RODENTS, DEBRIS, ETC. SEAL SHALL BE OF TYPE TO ALLOW FOR REMOVAL FOR INSTALLATION OF FUTURE CABLING

CONDUIT AND WIRE:

W1. THE FOLLOWING WIRING METHODS SHALL NOT BE USED: NON-METALLIC SHEATHED CABLE (ROMEX, NM, NMC, & NMS), ARMORED CABLE TYPE AC (BX), ELECTRICAL NON-METALLIC TUBING, TYPE ENT (SMURF-TUBE).

W2. CONDUIT RUNS MAY BE COMBINED EXCEPT WHERE ISOLATED GROUNDS ARE USED. IG CIRCUITS SHALL BE RUN IN SEPARATE CONDUITS. ALL HOME RUNS SHALL BE SIZED BASED ON DERATED CONDUCTOR AMPACITIES AND INCREASE CONDUIT AND WIRE SIZE AS REQUIRED BY NEC SECTION 310 REQUIREMENTS.

W3. CONDUIT SHALL HAVE A MAXIMUM OF 4 BENDS WITHOUT A JUNCTION BOX TO PREVENT DAMAGE TO CABLE DURING PULLING. THE EC SHALL PIGTAIL #12 PULL WIRE AT EACH END FOR INSTALLER TO PULL CABLE. ALL LOW VOLTAGE CONDUIT STUB-UPS SHALL BE PROVIDED WITH A BUSHING.

W4. MINIMUM WIRE SIZE SHALL BE #12 AWG COPPER UNLESS NOTED OTHERWISE. MINIMUM CONDUIT SIZE SHALL BE 1/2" UNLESS NOTED OTHERWISE. WIRES INSTALLED UNDERGROUND OR OUTDOORS SHALL BE THW.

W5. CONDUCTORS #10 AWG AND SMALLER SHALL BE SOLID COPPER. CONDUCTORS #8 AND LARGER SHALL BE STRANDED COPPER. ALUMINUM CONDUCTORS SHALL NOT BE UTILIZED FOR FEEDER OR BRANCH CIRCUIT DISTRIBUTION.

W6. RACEWAYS SHALL BE ANY OF THE FOLLOWING MATERIALS, INSTALLED IN ACCORDANCE WITH ALL APPLICABLE CODES:

OUTDOORS: (FOR SPECIFIC APPLICATIONS AND APPROPRIATE FITTINGS, SEE TABLE W6)

1. EXPOSED: RMC, IMC.
2. CONCEALED: RMC, IMC.
3. BELOW GRADE, SINGLE RUN: RNC, RMC.
4. BELOW GRADE, GROUPED: RNC, RMC.
5. CONNECTION TO VIBRATING EQUIPMENT (INCLUDING TRANSFORMERS AND HYDRAULIC, PNEUMATIC, ELECTRIC SOLENOID, OR MOTOR-DRIVEN EQUIPMENT): LFMC.
6. BOXES AND ENCLOSURES: NEMA 250, TYPE 3R OR 4.

INDOORS: (FOR SPECIFIC APPLICATIONS AND APPROPRIATE FITTINGS, SEE TABLE W6)

1. EXPOSED: EMT, IMC.
2. CONCEALED: EMT, IMC.

(CONTINUED ON TOP)

3. CONNECTION TO VIBRATING EQUIPMENT (INCLUDING TRANSFORMERS AND HYDRAULIC, PNEUMATIC, ELECTRIC SOLENOID, OR MOTOR-DRIVEN EQUIPMENT): FMC; EXCEPT USE LFMC IN DAMP OR WET LOCATIONS.
4. DAMP OR WET LOCATIONS: RIGID STEEL CONDUIT.
5. BOXES AND ENCLOSURES: NEMA 250, TYPE 1, EXCEPT AS FOLLOWS: A. DAMP, WET OR KITCHEN LOCATIONS: NEMA 250, TYPE 4, STAINLESS STEEL.

TABLE W6:

LOCATION	208V.	480V.	LOW ENERGY*
EXPOSED			
INDOORS	< 1" EMT COMPRESS. FTGS >1.25" IMC THREADED FTGS	IMC THREADED FTGS	EMT COMPR. FTGS
OUTDOORS	RMC OR IMC THREADED FTGS	RMC OR IMC THREADED FTGS	RMC OR IMC THREADED FTGS
CONCEALED			
WALLS	<2" EMT SET SCREW FTGS >2.5" IMC THREADED FTGS	<2" EMT SET SCREW. FTGS >2.5" IMC THREADED FTGS	EMT 1/2"- 2" SET SCREW FTGS 2.5" - 4" COMPR. FTGS
AIR HANDLING CEILING/SPACE	<2" EMT COMPR. FTGS >2.5" IMC THREADED. FTGS	2" EMT COMPR. FTGS < >2.5" IMC THREADED. FTGS	EMT COMPR. FTGS
NON AIR HANDLING CEILING/SPACE	<2" EMT SET SCREW FTGS >2.5" IMC THREADED. FTGS	<2" EMT COMPR. FTGS >2.5" IMC THREADED. FTGS	EMT 1/2" - 2" SET SCREW FTGS 2.5"- 4" COMPR. FTGS
BELOW GRADE			
INTERIOR	IMC THREADED FTGS OR SCHEDULE 40 OR 80 PVC	IMC THREADED FTGS	IMC THREADED FTGS SCHEDULE 40 OR 80 PVC
EXTERIOR	SCHEDULE 40 OR 80 PVC OR RMC THREADED FTGS	SCHEDULE 40 OR 80 PVC OR RMC THREADED FTGS	SCHEDULE 40 OR 80 PVC OR RMC THREADED FTGS

W7. ALL CONDUITS PENETRATING THE FREEZER/COOLER BOX SHALL BE SEALED IN COMPLIANCE NEC SECTION 300 AND THE FREEZER/COOLER BOX MANUFACTURERS REQUIREMENTS.

W8. PROVIDE THREE (3) 3/4" EMPTY CONDUITS FROM PANEL LP-1 UP TO THE CEILING SPACE AND CAP FOR FUTURE USE.

GROUNDING:

G1. ALL BRANCH AND FEEDER CIRCUITS SHALL BE GROUNDED BY TWO METHODS. THE FIRST METHOD SHALL INCLUDE AN INSULATED COPPER EQUIPMENT GROUNDING CONDUCTOR CONTAINED WITHIN THE SAME CONDUIT AS THE PHASE CIRCUIT CONDUCTORS AND SIZED PER NEC SECTION 250 REQUIREMENTS. THIS INSULATED EQUIPMENT GROUNDING CONDUCTOR SHALL HAVE ONE END PROPERLY TERMINATED AT THE EQUIPMENT GROUND BUS IN THE CORRESPONDING CIRCUIT BREAKER PANEL, AND THE OTHER END TERMINATED AT THE GROUNDING CONTACT OF A GROUNDING RECEPTACLE AND TO THE JUNCTION BOX OR TO AN EQUIPMENT CABINET, AS APPLICABLE. THE SECOND METHOD PROVIDES EQUIPMENT GROUNDING VIA METALLIC CONDUIT THAT IS CONNECTED AND TERMINATED IN FITTINGS LISTED FOR GROUNDING PER NEC SECTION 250 REQUIREMENTS. BOTH GROUNDING METHODS ARE REQUIRED IN A MCDONALD'S RESTAURANT. ISOLATED GROUND SHALL BE INSTALLED WHERE INDICATED ON PLAN AND AS SHOWN IN POS ISOLATED GROUND/DEDICATED CIRCUIT DETAIL ON SHEET E4.2.

G2. THE BUILDING GROUNDING SYSTEM SHALL COMPLY WITH NEC ARTICLE 250, McDONALD'S SPECIFICATIONS, AND SHEET E4.2. CAUTION: IT IS A SAFETY HAZARD AND AN NEC VIOLATION TO HAVE ANY NEUTRAL TO GROUND CONNECTIONS BEYOND THE MAIN ELECTRICAL DISCONNECT MEANS. McDONALD'S GROUNDING STANDARDS PURPOSELY EXCEED THOSE GIVEN BY THE NEC. THE EC SHALL PROVIDE A BUILDING GROUNDING SYSTEM MEETING NEC SECTION 250 REQUIREMENTS AS WELL AS MCDONALD'S STANDARDS.

G3. EC SHALL REFER TO "POS ISOLATED GROUND/DEDICATED CIRCUIT DETAIL, SHEET E4.2, FOR REQUIRED WIRING REQUIREMENTS OF COMPUTER PANEL CP.

G4. METAL RACEWAYS CONTAINING A GROUNDING ELECTRODE CONDUCTOR SHALL BE BONDED AT BOTH ENDS AS REQUIRED BY NEC SECTION 250 REQUIREMENTS.

TEMPERATURE CONTROLS:

T1. REMOTE TEMPERATURE SENSORS: EC SHALL PROVIDE 1/2" CONDUIT FROM JUNCTION BOX ABOVE CEILING DOWN TO SENSOR MOUNTED AT 4'-0" TO 4'-6" AFF.

T2. SEE DETAIL ON SHEET M3.0. FOR SENSOR MOUNTING DETAIL. LOCATION OF WALL MOUNTED TEMPERATURE SENSORS ARE SHOWN ON SHEET M1.2 AND E2.0.

T3. WHEN WIRING FOR PROGRAMMABLE THERMOSTATS AND REMOTE SENSORS IS NOT IN A CONDUIT, THE WIRING SHALL BE RUN TO THE UNDERSIDE OF THE ROOF DECK. NONE OF THE WIRING SHALL BE ROUTED OVER FLUORESCENT BALLASTS, POWER WIRING OR IN A CONDUIT WITH LINE VOLTAGE WIRING AS ELECTRICAL INTERFERENCE (NOISE) WILL CAUSE ERRATIC CONTROL OPERATION. ALL THERMOSTATS SHALL BE MOUNTED 4'-0" AFF.

FLAT PANEL TELEVISIONS:

TV1. EC SHALL PROVIDE A DUPLEX RECEPTACLE AND A LOW VOLTAGE BROADBAND CONNECTION FOR THE INSTALLATION OF FLAT PANEL TELEVISIONS. COORDINATE EXACT LOCATIONS WITH DECOR COMPANY. FOR BROADBAND CONNECTION, EC SHALL PROVIDE A 4 X 4 BOX WITH A 3/4" CONDUIT STUB-UP WITH A BUSHING INTO ACCESSIBLE CEILING SPACE.

ELECTRICAL PANELS:

E1. THE EC SHALL BE RESPONSIBLE FOR BALANCING THE LOADS ON ALL PANELS.

E2. THE EC SHALL PROVIDE ELECTRICAL SERVICE TO THE EQUIPMENT MOUNTED BREAKER PANEL. SEE ELECTRICAL ROUGH-IN PLAN AND SCHEDULE FOR ALL REQUIREMENTS.

E3. THE EC SHALL BE RESPONSIBLE FOR THE PROPER IDENTIFICATION AND LABELING OF ALL CIRCUIT BREAKERS. EACH PANEL SHALL BE PROVIDED WITH AN ACCURATE TYPEWRITTEN CIRCUIT DIRECTORY AT THE CONCLUSION OF THE PROJECT AND PRIOR TO RESTAURANT OPENING.

SECURITY AND DRIVE-THRU CAMERAS:

S1. EC TO PROVIDE ELECTRICAL POWER AND COMMUNICATION CONDUITS FOR BUILDING MOUNTED SECURITY AND DRIVE THRU CAMERAS. COORDINATE FINAL LOCATIONS WITH SECURITY AND DRIVE THRU CAMERA INSTALLERS.

LIGHTING:

L1. PROVIDE A WEATHERPROOF JUNCTION BOX IN PARAPET FOR FASCIA SIGN. FINAL CONNECTION BY OTHERS.

L2. COORDINATE THE LOCATION OF JUNCTION BOX (IN THE WALL) WITH THE OPENING IN TRELLIS (FOR THE LIGHT FIXTURE WIRES). THE LOCATION OF THE JUNCTION BOX AND THE OPENING IN THE TRELLIS SHALL BE ALIGNED FOR THE LIGHT FIXTURE TO BE INSTALLED PROPERLY. COORDINATE INSTALLATION OF JUNCTION BOX AND ANY NECESSARY OPENINGS IN TRELLIS WITH GC AND TRELLIS/CANOPY MANUFACTURER. SEE LIGHT FIXTURE INSTALLATION INSTRUCTIONS FOR REQUIREMENTS REGARDING MOUNTING BRACKETS FOR USE IN C-CHANNEL TRELLISES.

L3. EC SHALL FIELD VERIFY THAT LIGHT FIXTURES DO NOT OBSTRUCT OR CONFLICT WITH THE WORK OF OTHER TRADES. IF A DISCREPANCY IS FOUND, THE EC SHALL IMMEDIATELY NOTIFY THE GC BEFORE THE THE INSTALLATION OF SUCH FIXTURE(S). EC SHALL COORDINATE LOCATIONS OF ALL LIGHT FIXTURES IN DINING AREA WITH FINAL SEATING AND DECOR PLANS.

L4. IF PC-POS CASH REGISTER SYSTEM IS INSTALLED, EC SHALL RELOCATE FIXTURES ABOVE FRONT COUNTER TO AVOID GLARE ON THE CASH REGISTER SCREENS. EC SHALL INSTALL CABLE WHIP TO FIXTURES SO THAT FIXTURE MAY BE RELOCATED FOUR FEET WITHOUT DISCONNECTING CABLE WHIP.

L5. EC SHALL COORDINATE LOCATION OF ALL EXTERIOR LIGHTS TO AVOID INTERFERENCE WITH ANY CORBELS, TRUSSES, BEAMS OR OTHER SPECIAL EXTERIOR TREATMENTS. INSTALL LIGHT FIXTURES WITH CORRECT ORIENTATION PER MANUFACTURER'S INSTRUCTIONS

L6. THE USE OF INTERLOCK TYPE "MC" CABLE IN LENGTHS OF 6 FEET OR LESS (WHERE PERMITTED BY LOCAL CODES) SHALL BE ALLOWED FOR WIRING TO INTERIOR LIGHTING FIXTURES. "ROMEX" OR "BX" SHALL NOT BE USED.

L7. EC SHALL VERIFY THAT NOT MORE THAN 3% VOLTAGE DROP EXISTS FROM THE LIGHTING PANEL TO ANY EXTERIOR LIGHTING FIXTURE OR SIGNAGE BALLAST.

L8. WHERE MCDONALD'S RESTAURANT HAS A PLAYPLACE, THE EC SHALL COORDINATE EXACT LOCATION OF PLAYPLACE LIGHTING WITH PLAYPLACE TOY VENDOR FOR MAXIMUM ILLUMINATION AND SAFETY PER THE FINAL LOCATION OF THE PLAYPLACE TOY. LIGHTING FIXTURES SHALL NOT BE MOUNTED TO THE TOY OR ANY PART OF THE TOY STRUCTURE.

L9. EC SHALL VERIFY ALL TAP SETTINGS FOR H.I.D. LIGHTING FIXTURES AND MAKE ANY NECESSARY CORRECTIONS PRIOR TO INSTALLATION.

LINGLE DESIGN GROUP INC
158 WEST MAIN STREET
LENA, IL 61048
815.369.9155
1764 BLAKE ST
DENVER, CO 8020
303.974.5873
WWW.LINGLEDESIGN.COM

DICKERSON ENGINEERING, INC.
Professional Electrical Engineers
3343 NORTH RIDGE AVENUE
ARLINGTON HEIGHTS, IL 60004
TEL (847) 966-0290
WWW.DEI-PE.COM
ILLINOIS REGISTERED DESIGN FIRM # 184-000949

© ALL DRAWINGS AND WRITTEN MATERIAL CONTAINED HEREIN ARE THE PROPERTY OF THE LINGLE DESIGN GROUP, INC. THEY MAY NOT BE REVISED, COPIED, REUSED, OR DISCLOSED IN ANY MANNER WITHOUT WRITTEN AUTHORIZATION FROM THE ARCHITECT.

JOSE HERNANDEZ LICENSED 27273 KANSAS PROFESSIONAL ENGINEER

SIGNATURE

07/28/2026 DATE | 04/30/2028 EXPIRATION DATE

COVERING ELECTRICAL DESIGN

STATE ID: 150405
PROJECT #: 25-079
NATIONAL #: 44936
DRAWN BY: DEI
CHECKED BY: AHRS

DATE:
10/15/2025 - PERMIT / BID SET

REVISIONS
1 11/12/25 - QC COMMENTS/PROTO UPDATE
2 02/23/2026 - CITY COMMENTS
3 03/10/2026 - DECOR UPDATE
4 08/02/26 - OWNER COMMENTS / PROTOTYPE UPDATES
5
6

CLIENT
McDonald's USA, LLC

PROTOTYPE
BB20 4590 MS-HB
ISSUE DATE 08/27/25

ADDRESS
2320 METROPOLITAN AVE
KANSAS CITY, KS 66106

SHEET TITLE
NOTES & DETAILS

SHEET NUMBER:
E3.1

SEQUENCE OF OPERATION:

1. TURNING "ON" ANY PIECE OF COOKING EQUIPMENT UNDER A HOOD WILL TURN ON THE EXHAUST FAN AND ASSOCIATED RTU PROVIDING MAKEUP AIR FOR THAT HOOD.
2. TURNING "OFF" THE LAST PIECE OF COOKING EQUIPMENT UNDER A HOOD WILL TURN OFF THE EXHAUST FAN FOR THAT HOOD.
3. IF THE ANSUL SYSTEM SHOULD DISCHARGE WHILE THE COOKING EQUIPMENT AND EXHAUST FAN ARE OPERATING, THE COOKING EQUIPMENT WILL BE SHUT OFF, BUT THE EXHAUST FAN WILL CONTINUE TO RUN AND WILL FORCE THE ROOFTOP UNITS INTO A "SCHEDULED" MODE
4. THE ANSUL SYSTEM MUST BE RECHARGED AND MANUALLY RESET BEFORE THE COOKING EQUIPMENT WILL AGAIN BE ABLE TO OPERATE.
5. THE ON/OFF SWITCH ON THE EXHAUST FAN IS NORMALLY KEPT IN THE "ON" POSITION. IF IT IS TURNED OFF FOR SERVICE, THE COOKING EQUIPMENT WILL TURN OFF AND NOT BE ABLE TO OPERATE UNTIL THE EXHAUST FAN ON/OFF SWITCH IS AGAIN TURNED ON.

INTERLOCK DIAGRAM LEGEND

- ● TERMINAL BLOCK IN CHASE
- CTB – CHASE TERMINAL BLOCK. PROVIDED AND INSTALLED BY KITCHEN EQUIPMENT SUPPLIER
- ETB – EQUIPMENT TERMINAL BLOCK
- EFCR – EXHAUST FAN CONTROL RELAY. PROVIDED BY CONTRACTOR.
- IGR – INTERNAL GRILL RELAY PROVIDED WITHIN GARLAND GRILLS
- MS – ANSUL MICROSWITCH PROVIDED BY KITCHEN EQUIPMENT SUPPLIER
- » CONTROL CORD PLUG & RECEPTACLE
- —— FIELD WIRING
- ▬▬ CONTROL CORD/INTERNAL WIRING
- - - - FACTORY WIRING
- —— EQUIPMENT OR ENCLOSURE

COOKING EQUIPMENT EXHAUST FAN	MAKE UP PROVIDED BY
EF/1	RTU–3
EF/2	RTU–1
EF/3	RTU–2

NOTE
RTU # ASSOCIATED WITH EACH EXHAUST FAN BASED ON PROTOTYPICAL VALUES ONLY. VERIFY THAT EXHAUST FAN ACTIVATES THE CORRESPONDING RTU TO PROVIDE AN ADEQUATE AMOUNT OF MAKEUP AIR.

1 TYPICAL MAKEUP AIR RTU EXHAUST FAN SCHEDULE
E-3.2 FOR REFERENCE ONLY

REVISED: 6/18

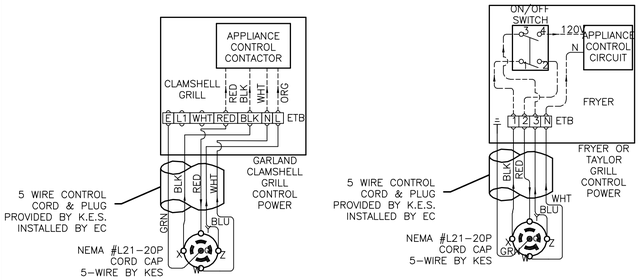

4 CONTROL CORD CONNECTION
E-3.2 FOR REFERENCE ONLY

REVISED: 6/18

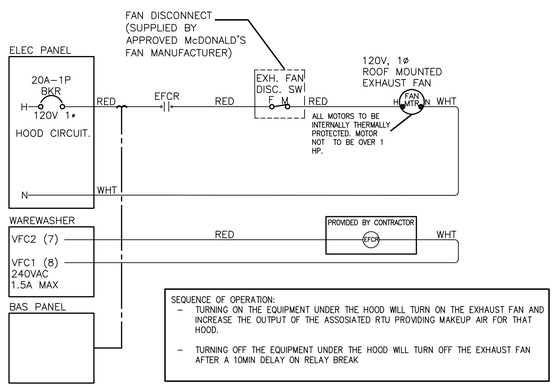

7 INTERLOCK LADDER DIAGRAM FOR EXHAUST FAN AND WAREWASHER
E-3.2 FOR REFERENCE ONLY

REVISED: 02/24

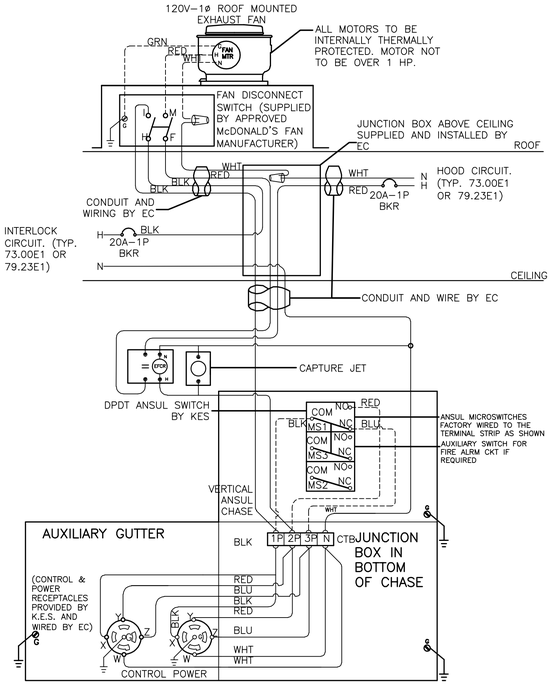

NOTE
IF CAPTURE JET IS REQUIRED TO BE OFF DURING AN ANSUL DISCHARGE EVENT, POWER FROM TERMINAL 2P THROUGH AN ANSUL SWITCH. IF ALL SHIPPED ANSUL SWITCH SPARES ARE USED, ANSUL SWITCHES ARE AVAILABLE THROUGH THE KES.

2 INTERLOCK WIRING DIAGRAM FOR EXHAUST FAN AND COOKING EQUIPMENT
E-3.2 FOR REFERENCE ONLY

REVISED: 6/18

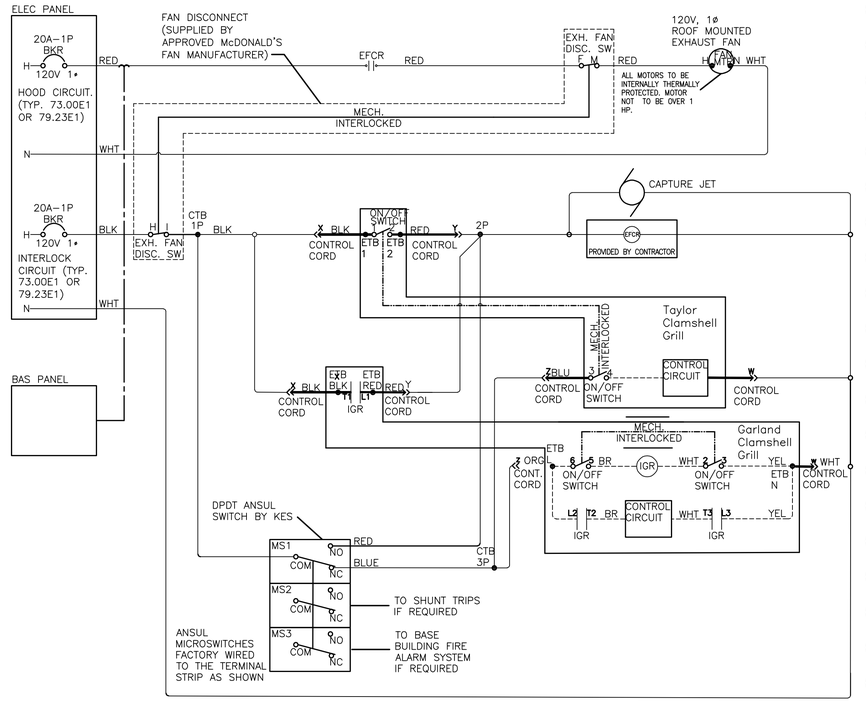

3 INTERLOCK LADDER DIAGRAM
E-3.2 FOR REFERENCE ONLY

REVISED: 4/26

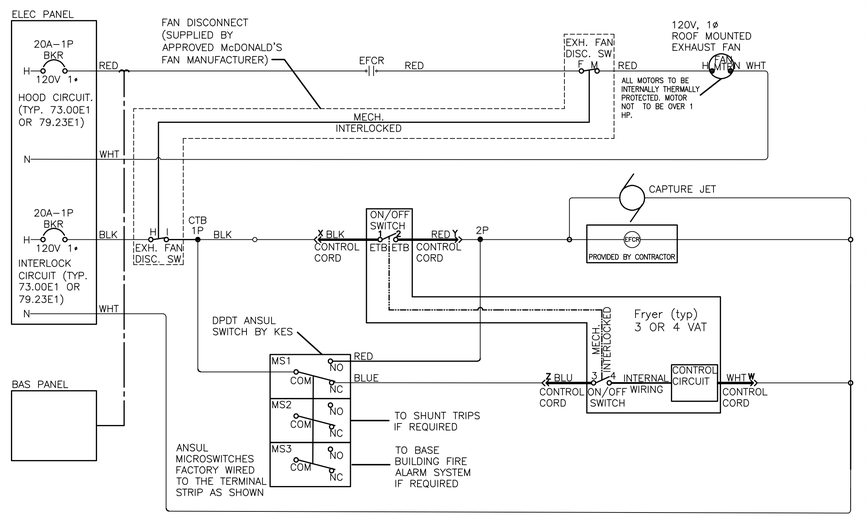

6 INTERLOCK LADDER DIAGRAM
E-3.2 FOR REFERENCE ONLY

REVISED: 4/26

LINGLE DESIGN GROUP INC
158 WEST MAIN STREET
LENA, IL 61048
815.369.9155
1764 BLAKE ST
DENVER, CO 8020
303.974.5873
WWW.LINGLEDESIGN.COM

DICKERSON ENGINEERING, INC.
Professional Electrical Engineers
3343 NORTH RIDGE AVENUE
ARLINGTON HEIGHTS, IL 60004
TEL (847) 966-0260
WWW.DEI-PE.COM
ILLINOIS REGISTERED DESIGN FIRM # 184-000949

© ALL DRAWINGS AND WRITTEN MATERIAL CONTAINED HEREIN ARE THE PROPERTY OF THE LINGLE DESIGN GROUP, INC. THEY MAY NOT BE REVISED, COPIED, REUSED, OR DISCLOSED IN ANY MANNER WITHOUT WRITTEN AUTHORIZATION FROM THE ARCHITECT.

JUSTIN HERMANSEN LICENSED 27273 KANSAS PROFESSIONAL ENGINEER

SIGNATURE

07/28/2026 DATE — 04/30/2028 EXPIRATION DATE

COVERING ELECTRICAL DESIGN

STATE ID: 150405
PROJECT #: 25-079
NATIONAL #: 44936
DRAWN BY: DEI
CHECKED BY: AH/RS

DATE:
10/15/2025 - PERMIT / BID SET

REVISIONS
1 11/12/25 - QC COMMENTS/PROTO UPDATE
2 02/23/2026 - CITY COMMENTS
3 03/10/2026 - DECOR UPDATE
4 08/02/26 - OWNER COMMENTS / PROTOTYPE UPDATES

CLIENT
McDonald's USA, LLC

PROTOTYPE
BB20 4590 MS-HB
ISSUE DATE 08/27/25

ADDRESS
2320 METROPOLITAN AVE
KANSAS CITY, KS 66106

SHEET TITLE
INTERLOCK DIAGRAMS

SHEET NUMBER:
E3.2

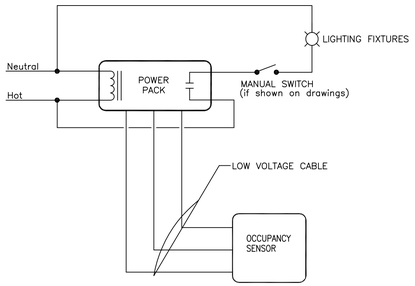

NOTES:

1. REFER TO LIGHTING PLAN FOR OCCUPANCY SENSOR LOCATIONS AND QUANTITIES.

1 / E-4.0 **OCCUPANCY SENSOR CONTROL DETAIL**
NOT TO SCALE

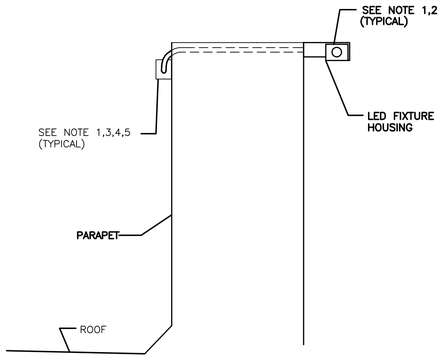

3 / E-4.0 **BRAND WALL LIGHTING DETAIL**
NOT TO SCALE

GENERAL NOTES

1. PLACE LED FIXTURE AT DESIRED LOCATION AND INSTALL FIXTURE FROM LEFT TO RIGHT WHEN FACING ARCADE AND ATTACH POWER SUPPLY AND MOUNTING BRACKET AS RECOMMENDED BY MANUFACTURER.
2. EC SHALL CONNECT NEW FIXTURES TO THE NEXT AVAILABLE SPARE 120V CIRCUIT AND MAKE ALL ELECTRICAL CONNECTIONS AS REQUIRED FOR A COMPLETE OPERATING SYSTEM.
3. POWER SUPPLY SHALL ALWAYS BE INSTALLED TO THE LEFT SIDE OF FIXTURE WHEN FACING ARCADE.
4. OVERALL FIXTURE RUN TO BE CENTERED ON OVERALL LENGTH OF WALL.
5. CONNECT NEW LED FIXTURES TO EXISTING LIGHTING CIRCUIT(S) AS REQUIRED. ENSURE THAT CIRCUIT BREAKER AND CONDUCTOR SIZES DO NOT EXCEED 1200 WATTS ON A 15A CIRCUIT AND 1600 WATTS ON A 20A CIRCUIT. VERIFY EXISTING CONDITIONS AND REQUIREMENTS IN FIELD. PROVIDE ADDITIONAL CIRCUITS (C.B.,WIRING,CONDUITS) AS REQUIRED.

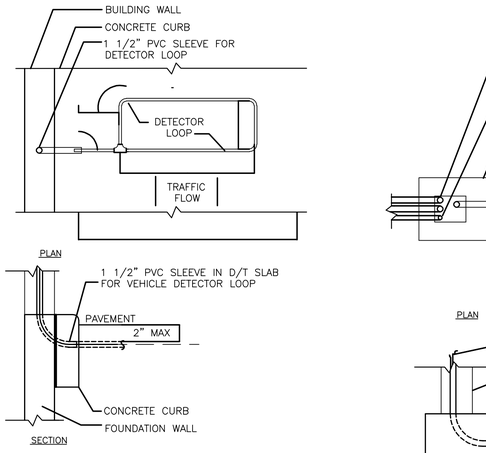

B – DT WINDOW DETECTOR LOOP

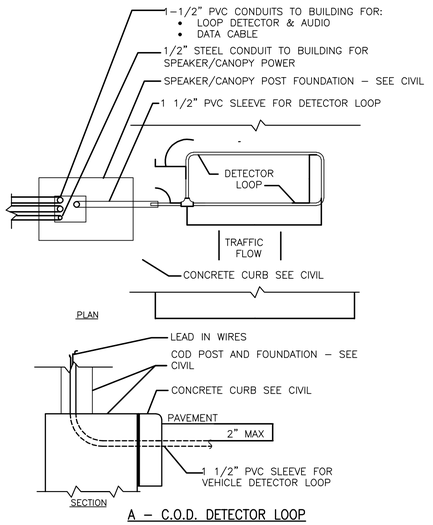

A – C.O.D. DETECTOR LOOP

2 / E-4.0 **DETECTOR LOOP DETAILS**
NOT TO SCALE

NOTES

1. VERIFY CONDUIT SIZES AND LAYOUT WITH DETECTOR LOOP MANUFACTURER.
2. CENTER VEHICLE DETECTOR LOOP (ITEM # 217.11E1) IN DRIVE THRU LANE. INSTALL PER MFR. RECOMMENDATIONS.
3. SEE CIVIL FOR DIMENSIONS OF DRIVE-THRU LANE CONCRETE PAD FOR DETECTOR LOOP.
4. NO STEEL (REBAR OR ELECTRICAL WIRE) SHALL BE USED WITHIN 2' OF LOOP.
5. DETECTOR LOOP MANUFACTURERS:
   DETECTOR LOOPS MAY BE BY ONE OF THE FOLLOWINGS COMPANIES OR EQUAL.
   3M: 1-800-328-0033
   HME: 1-800-848-4468
6. DETECTOR LOOP MATERIAL:
   PVC TUBING 1/2" I.D. 100 PSI LOOP MADE FROM ONE LENGTH OF THIN FOURTEEN GAUGE STRANDED WIRE. LEAD-IN IS PRE-TWISTED AT FACTORY.
7. DETECTOR LOOP CONSTRUCTION:
   FORMED WITH ONE CONTINUOUS LENGTH OF PVC WITH NO SHARP CORNERS AS DETAILED. WIRE LOOPED, FORMED, & PIGTAILED AS DETAILED.

CONDUIT, WIRE SIZE AND GROUNDING FOR HVAC UNITS			
HACR BRKR SIZE	CONDUIT & WIRE SIZE	ROOF TOP UNIT	PANEL:CIRCUIT #
40A	1"C-3#8		
45A	1"C-3#6		
50A	1"C-3#6	RTU-2	MDP:12
60A	1"C-3#6		
70A	1-1/4"C-3#4		
80A	1-1/4"C-3#3	RTU-3	MDP:8
90A	1-1/4"C-3#3		
100A	1-1/4"C-3#2	RTU-1	MDP:5
110A	1-1/2"C-3#1		
150A	1-1/2"C-3#1/0		
175A	2"C-3#2/0		
200A	2"C-3#3/0		
225A	2"C-3#4/0		

THE CONTRACTOR SHALL BE RESPONSIBLE FOR FINAL COORDINATION OF ALL ELECTRICAL FEEDERS AND CIRCUIT BREAKERS WITH THE MANUFACTURER'S WRITTEN DATA FOR EACH MECHANICAL DEVICE PRIOR TO SUBMITTAL OF ANY ELECTRICAL EQUIPMENT FOR REVIEW. NO ADDITIONAL COMPENSATION WILL BE ALLOWED FOR ANY CHANGES TO ELECTRICAL FEEDERS OR CIRCUIT BREAKERS REQUIRED FOR ANY MECHANICAL DEVICES.

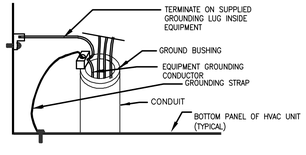

4 / E-4.0 **HVAC GROUNDING DETAIL**
NOT TO SCALE

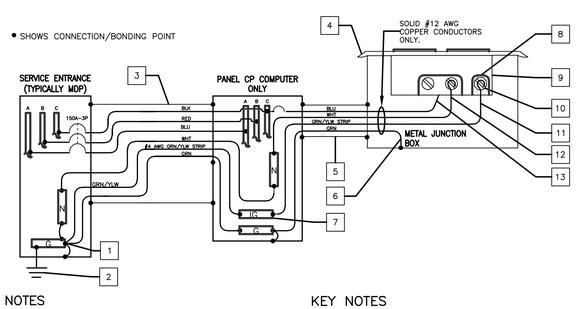

NOTES

1. ALL P.O.S. EQUIPMENT (COMPUTERS,PRINTERS,MONITORS KVS, MODEM, HUB & COD) SHALL BE POWERED FROM THE COMPUTER PANEL.

   ALL OTHER COMPUTER/DIGITAL EQUIPMENT SHALL BE POWERED FROM PHASE "A" IN THE COMPUTER PANEL.
2. ISOLATED GROUND INSTALLATION SHALL COMPLY WITH THE REQUIREMENTS OF NEC SECTION 250 .
3. EACH 20 AMP CIRCUIT SHALL HAVE IT'S OWN ISOLATED EQUIPMENT GROUNDING CONDUCTOR.
4. ENTIRE GROUNDING SYSTEM SHALL COMPLY WITH NEC ARTICLE 250 AND MCDONALD's BUILDING GROUNDING DETAIL.
5. EC SHALL VERIFY CORRECT POLARITY AT RECEPTACLE.
6. EC SHALL VERIFY THAT SUBPANEL CP DOES NOT CONTAIN ANY ILLEGAL NEUTRAL TO GROUND BONDS.
7. PANEL CP SHALL ONLY BE USED TO POWER SENSITIVE ELECTRONIC EQUIPMENT, AS OUTLINED IN NOTE #1. IT SHALL NOT BE USED TO POWER ANY OTHER LOADS.
8. IT IS A SAFETY HAZARD AND AN NEC VIOLATION FOR THE POS SYSTEM TO HAVE ITS OWN INDEPENDENT GROUNDING ROD. IF AN INDEPENDENT GROUND ROD IS FOUND FOR THE POS SYSTEM, IT SHALL BE BONDED TO THE BUILDING GROUNDING SYSTEM.

KEY NOTES

1. THIS IS THE ONLY POINT WHERE THE ISOLATED EQUIPMENT GROUNDING CONDUCTOR SHALL BE CONNECTED TO THE BUILDING'S GROUNDING SYSTEM.
2. SEE BUILDING GROUNDING DETAIL SHEET E4.2.
3. 1 1/2" METAL CONDUIT: 4-#1/0 CU + 1-#6 CU EQUIP GND + 1-#4 CU ISOLATED GND.
4. ALL ISOLATED GROUND/ DEDICATED CIRCUIT RECEPTACLE COVER PLATES SHALL BE ORANGE HUBBELL PJ7CO (SINGLE), PJ8CO (ONE DUPLEX) OR PJ82CO (TWO DUPLEX) MARKED "COMPUTER ONLY".
5. METAL CONDUIT SHALL CONTAIN ONLY P.O.S. CIRCUIT CONDUCTORS (DEDICATED CIRCUIT). ONLY USE RIGID NON-METALLIC CONDUIT BELOW GRADE WHEN REQUIRED BY LOCAL CODE.
6. EQUIPMENT GROUNDING BONDING CONDUCTOR (TYPICAL)
7. ISOLATED GROUND BUS, ELECTRICALLY INSULATED FROM PANEL ENCLOSURE USED TO TERMINATE ONLY ISOLATED EQUIPMENT GROUNDING CONDUCTORS.
8. ALL CONDUCTORS SHALL BE SOLID COPPER AND TERMINATED TO THEIR APPROPRIATE TERMINAL SCREWS BY WRAPPING THE CONDUCTOR COMPLETELY AROUND THE SCREW BARREL AND TIGHTENING THE SCREW PER MANUFACTURER'S TORQUE SPECIFICATIONS.
9. ISOLATED GROUND RECEPTACLE HUBBELL-IG4700,IG4710,IG5262 OR IG5261. SEE ROUGH IN SCHEDULE FOR THE APPROPRIATE RECEPTACLE TO USE.
10. ISOLATED GREEN GROUND SCREW.
11. ISOLATED EQUIPMENT GROUNDING CONDUCTOR (GRN W/YLW STRIP)
12. NEUTRAL CONDUCTOR TERMINATED ON SILVER SCREW.
13. PHASE CONDUCTOR TERMINATED ON BRASS SCREW

5 / E-4.0 **POS & COD ISOLATED GROUND/DEDICATED CIRCUIT**
NOT TO SCALE

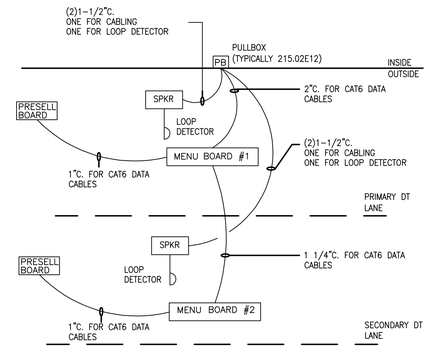

6 / E-4.0 **DT LOW VOLTAGE CONDUIT DIAGRAM**
NOT TO SCALE

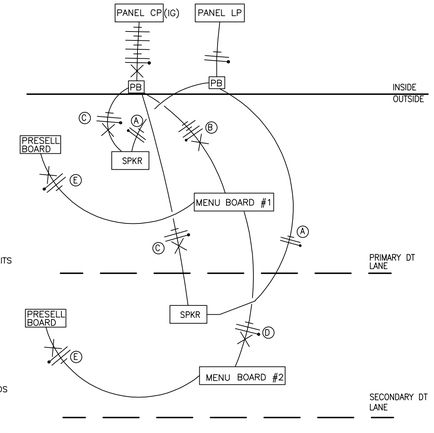

7 / E-4.0 **DRIVE THRU POWER DIAGRAM**
NOT TO SCALE

NOTE:

* VERIFY EXACT CIRCUITS & QUANTITIES OF CIRCUITS WITH PANEL SCHEDULES AND MANUFACTURERS INSTALLATION INSTRUCTIONS.

* VERIFY LOW VOLTAGE CABLE COUNT WITH POS INSTALLER. LOW VOLTAGE CABLE SUPPLIED AND TERMINATED BY POS INSTALLER. ELECTRICAL CONTRACTOR TO PULL CABLE.

(A) 2#12 & 1#12 GND. TO LP-1 FOR COD CANOPY LIGHTING.

(B) 4#12 & 1#12 GND & 1#12 ISOLATED GND., TO CP FOR ISOLATED GROUND POWER TO MENUBOARDS AND MEDIA PLAYERS.

(C) 2#12 & 1#12 GND & 1#12 ISOLATED GND., TO CP FOR ISOLATED GROUND POWER TO SPEAKER CANOPY/STAND. EACH CANOPY/STAND SHALL BE ON ITS OWN SEPARATE CIRCUIT.

(D) 2#12 & 1#12 GND & 1#12 ISOLATED GND., TO CP FOR ISOLATED GROUND POWER TO MENUBOARDS AND MEDIA PLAYERS.

(E) 2#12 & 1#12 GND & 1#12 ISOLATED GND., TO CP FOR ISOLATED GROUND POWER TO FOR PRESELL BOARDS AND MEDIA PLAYER.

LINGLE DESIGN GROUP INC
158 WEST MAIN STREET
LENA, IL 61048
815.369.9155
1764 BLAKE ST
DENVER, CO 8020
303.974.5873
WWW.LINGLEDESIGN.COM

DICKERSON ENGINEERING, INC.
Professional Electrical Engineers
3343 NORTH RIDGE AVENUE
ARLINGTON HEIGHTS, IL 60004
TEL (847) 966-0260
WWW.DEI-PE.COM
ILLINOIS REGISTERED DESIGN FIRM # 184-000949

© ALL DRAWINGS AND WRITTEN MATERIAL CONTAINED HEREIN ARE THE PROPERTY OF THE LINGLE DESIGN GROUP, INC. THEY MAY NOT BE REVISED, COPIED, REUSED, OR DISCLOSED IN ANY MANNER WITHOUT WRITTEN AUTHORIZATION FROM THE ARCHITECT.

AUGUST HERMANEZ LICENSED 27273 KANSAS PROFESSIONAL ENGINEER

SIGNATURE

07/28/2026 DATE — 04/30/2028 EXPIRATION DATE

COVERING ELECTRICAL DESIGN

STATE ID: 150405
PROJECT #: 25-079
NATIONAL #: 44936
DRAWN BY: DEI
CHECKED BY: AHRS

DATE:
10/15/2025 - PERMIT / BID SET

REVISIONS
1 11/12/25 - QC COMMENTS/PROTO UPDATE
2 02/23/2026 - CITY COMMENTS
3 03/10/2026 - DECOR UPDATE
4 08/02/26 - OWNER COMMENTS / PROTOTYPE UPDATES

CLIENT
McDonald's USA, LLC

PROTOTYPE
BB20 4590 MS-HB
ISSUE DATE 08/27/25

ADDRESS
2320 METROPOLITAN AVE
KANSAS CITY, KS 66106

SHEET TITLE
WIRING DETAILS

SHEET NUMBER:
E4.0

LIGHTING CONTROL SYSTEM

INTERIOR CUSTOMER LIGHTING

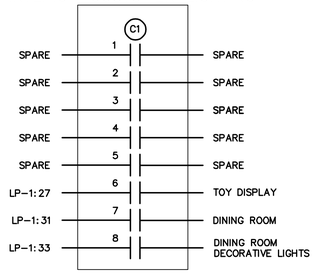

INTERIOR CREW LIGHTING

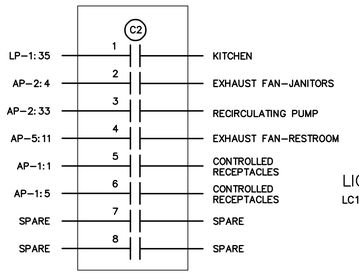

BUILDING FACADE

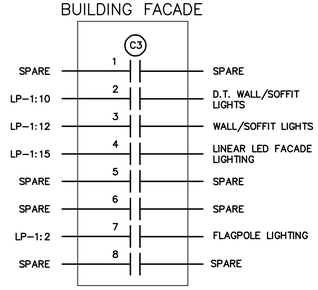

EXTERIOR LIGHTING

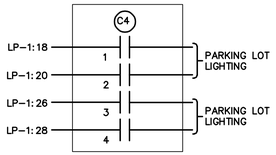

EXTERIOR LIGHTING

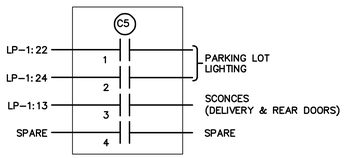

EXTERIOR SIGNAGE

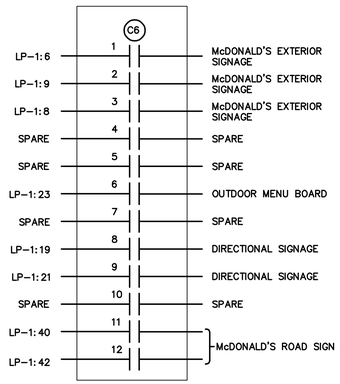

LIGHTING CONTROL NOTES

LC1. CONTACTOR DETAILS ARE DIAGRAMMATIC ONLY AND ARE SHOWN WITH TYPICAL LOADS AND CIRCUIT ASSIGNMENTS. LOADS, CIRCUIT ASSIGNMENTS AND NUMBER OF CONTACTORS MAY VARY BY RESTAURANT LOCATION AND PER BAS SUPPLIERS SYSTEMS. VERIFY EXACT REQUIREMENTS WITH BAS INSTALLATION DETAILS, SITE PLANS, ELECTRICAL PANEL SCHEDULES AND ACM. EC SHALL MAKE ALL MODIFICATIONS AS REQUIRED. FINAL INSTALLATION SHALL BE FULLY NEC AND ENERGY CODE COMPLIANT.

LC2. ELECTRICAL CONTRACTOR SHALL FURNISH AND INSTALL ALL WIRING, CONNECTIONS, TERMINATIONS, ETC. THAT ARE NOT PROVIDED BY THE BAS SUPPLIER FOR A COMPLETE, FULLY OPERATIONAL AND CODE COMPLIANT LIGHTING CONTROL SYSTEM.

LC3. ALL COMPONENTS FOR THIS LIGHTING CONTROL SYSTEM SHALL BE INSTALLED BY THE ELECTRICAL CONTRACTOR. SEE BOXED NOTE BELOW FOR OPTIONS.

LC4. ALL COMPONENTS SHALL BE UL LISTED AND LABELED AND THE SYSTEM SHALL COMPLY WITH ALL LOCAL, STATE AND FEDERAL ENERGY CODE REQUIREMENTS.

LC5. ALL CONTACTORS SHALL BE LOCATED IN A NEMA 1 ENCLOSURE WITH SCREW TYPE COVER MOUNTED DIRECTLY ABOVE LIGHTING PANEL OR SWITCHGEAR SO AS TO BE ACCESSIBLE.

LC6. ALL CONTACTORS SHALL BE RATED FOR 30 AMP LOADS UNLESS NOTED OTHERWISE AND SHALL BE HID RATED WHERE REQUIRED.

LC7. COIL VOLTAGES FOR ALL CONTACTORS SHALL BE 120 VOLT UNLESS NOTED OTHERWISE.

LC8. CONTACTOR C5 IS INTENDED TO CONTROL PARKING LOT LIGHTS NEAR TRASH CORRAL, DELIVERY DOORS, AND EMPLOYEE PARKING, THUS ALLOWING A DIFFERENT LIGHTING SCHEDULE TO BE USED IN THOSE AREAS.

INTERIOR LIGHTING CONTROL SCHEDULE							
	LOCAL CONTROL	MANUAL ON	PARTIAL ON	MULTI LEVEL	DAYLIGHTING	AUTO OFF	SCHEDULE OFF
DINING	MANAGERS OFFICE		X		X		X
KITCHEN	MANAGERS OFFICE		X				X
SUPPORT/STOCK	X					X	
CREW	X	X		X		X	
MANAGER	X	X		X		X	
BATHROOM						X	
SMALL STORAGE	X	X				X	
ENTRY VESTIBULE							X

NOTES:
1. LOCAL CONTROL: MANUAL LIGHTING CONTROL THAT PROVIDES ON AND OFF CONTROL IN SPACE. REMOTE LOCATION CONTROL DEVICE MUST BE LABELED TO IDENTIFY CONTROLLED LIGHTING.
2. MANUAL ON: NONE OF THE LIGHTING SHALL BE AUTOMATICALLY TURNED ON.
3. PARTIAL ON: 50% OF THE GENERAL LIGHTING SHALL BE AUTOMATICALLY TURNED ON.
4. MULTI LEVEL: GENERAL LIGHTING SHALL BE FITTED WITH A MANUAL CONTROLLED CONTINUOUS DIMMER.
5. DAYLIGHTING: REQUIRED WHEN PRIMARY AND SECONDARY ZONES CONTAIN 150W OF GENERAL LIGHTING. PHOTOCONTROL SHALL REDUCE LIGHTING IN RESPONSE TO AVAILABLE DAYLIGHT USING CONTINUOUS DIMMING TO 20% AND OFF.
6. AUTO OFF: ALL LIGHTING INCLUDING LIGHTING CONNECTED TO EMERGENCY CIRCUITS SHALL BE AUTOMATICALLY SHUT OFF WITHIN 20 MINUTES OF OCCUPANTS LEAVING THE SPACE.
7. SCHEDULE OFF: ALL LIGHTING, INCLUDING LIGHTING CONNECTED TO EMERGENCY CIRCUITS, SHALL BE AUTOMATICALLY SHUT OFF DURING PERIODS WHEN THE SPACE IS SCHEDULED TO BE UNOCCUPIED.
8. 0.02W PER SQUARE FT OF BUILDING ALLOWED TO BE CONTINUOUSLY LIT.

EXTERIOR LIGHTING CONTROL SCHEDULE			
	TIME CLOCK	PHOTCELL	OCCUPANCY SENSOR
POLE LIGHTING	X	X	X
BUILDING MOUNT LIGHTING	X	X	
SIGNAGE	X	X	

NOTES:
1. TIME CLOCK: LIGHTING SHALL BE AUTOMATICALLY SHUT OFF BETWEEN BUSINESS CLOSING (OR MIDNIGHT) AND BUSINESS OPENING (OR 6AM) WHICHEVER PROVIDES THE SHORTEST OFF DURATION.
2. PHOTOCELL: LIGHTING SHALL BE AUTOMATICALLY TURNED OFF WHEN SUFFICIENT DAYLIGHT IS AVAILABLE.
3. OCCUPANCY SENSOR: LIGHTING SHALL AUTOMATICALLY REDUCE THE CONNECTED LIGHTING POWER BY 50% WHEN NO ACTIVITY HAS BEEN DETECTED IN AREA IN 15 MINUTES. NO MORE THAN 1500W OF LIGHTING PER CONTROL ZONE.

LIGHTING CONTROL COMMISSIONING:

1. PROVIDE DOCUMENTATION THAT LIGHTING CONTROLS MEET DOCUMENTED PERFORMANCE CRITERIA TO COMPLY WITH IECC C408.3.

LIGHTING CONTROL SYSTEM SHALL COMPLY WITH IECC:

1. HAVE A MINIMUM 7-DAY CLOCK.
2. BE CAPABLE OF BEING SET FOR SEVEN DIFFERENT DAY TYPES PER WEEK.
3. INCORPORATE AN AUTOMATIC HOLIDAY "SHUTOFF" FEATURE, WHICH TURNS OFF ALL CONTROLLED LIGHTING LOADS FOR NOT FEWER THAN 24 HOURS AND THEN RESUMES NORMALLY SCHEDULED OPERATIONS.
4. HAVE PROGRAM BACKUP CAPABILITIES, WHICH PREVENT THE LOSS OF PROGRAM AND TIME SETTINGS FOR NOT FEWER THAN 10 HOURS, IF POWER IS INTERRUPTED.
5. INCLUDE AN OVERRIDE SWITCH THAT COMPLIES WITH THE FOLLOWING:
   - 5.1. THE OVERRIDE SWITCH SHALL BE A MANUAL CONTROL.
   - 5.2. THE OVERRIDE SWITCH, WHEN INITIATED, SHALL PERMIT THE CONTROLLED LIGHTING TO REMAIN ON FOR NOT MORE THAN 2 HOURS.
   - 5.3 ANY INDIVIDUAL OVERRIDE SWITCH SHALL CONTROL THE LIGHTING FOR AN AREA NOT LARGER THAN 5,000 SQUARE FEET (465 M2).

LIGHTING CONTROL INSTALLATION OPTIONS

OPTION 1 (STANDARD) CONTACTORS AND CONTACTOR ENCLOSURE FOR THIS LIGHTING CONTROL SYSTEM SHALL BE FURNISHED BY THE BAS SUPPLIER AND INSTALLED BY THE ELECTRICAL CONTRACTOR ON SITE FOR A COMPLETE AND FULLY FUNCTIONAL SYSTEM.

OPTION 2 (OPTIONAL) LIGHTING CONTROL CAN BE ACCOMPLISHED VIA UTILIZATION OF A SMART TYPE BREAKER PANEL REPLACING STANDARD PANEL LP-1. PANEL SHALL UTILIZE AN INTEGRAL MOTOR OPERATED CIRCUIT BREAKERS OR AN INTEGRAL CIRCUIT BREAKER/CONTACTOR TYPE COMBINATION DEVICE WITH AN INTEGRAL PROGRAMMING CONTROL MODULE AND SHALL BE ORDERED THROUGH OUR ELECTRICAL EQUIPMENT NATIONAL ACCOUNT PROGRAM (SQUARE-D) THROUGH OUR CONSTRUCTION PURCHASING TEAM.

BUILDING AUTOMATION SYSTEM

INSTALLATION & TECHNICAL ASSISTANCE INFORMATION:
LENNOX BAS: McD@CCBAC.com

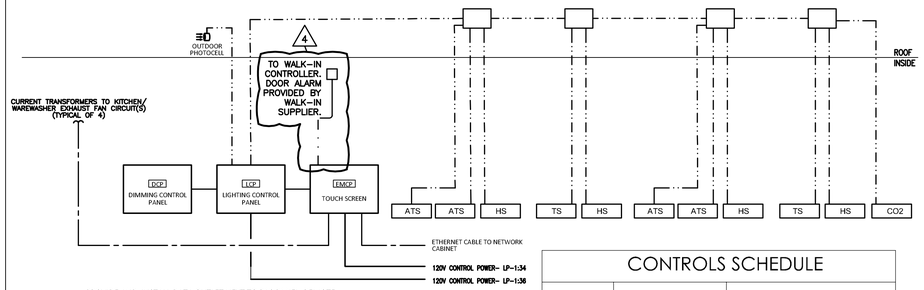

PROVIDE AND INSTALL DATA OUTLET NEXT TO BAS PANEL. REMOTE COMMISSIONING IS NOT POSSIBLE WITHOUT DATA CONNECTION.

INSTALLATION NOTES:
1. PROVIDE, INSTALL AND SECURE ALL NECESSARY CABLE & CONDUIT PER BAS DRAWINGS AND SPECIFICATIONS.
2. MOUNT ALL BAS CONTROL ENCLOSURES.
3. PERFORM ALL LOW VOLTAGE TERMINATIONS.
4. ROUGH-IN, INSTALLATION AND WIRING FOR TEMPERATURE SENSORS AND TOUCHSCREEN PER PLAN LOCATIONS.
5. PROVIDE POWER CIRCUITS INTO CONTROL CANS PER BAS DETAILS.
6. COORDINATE WITH SUPPLIER TO SCHEDULE REMOTE COMMISSIONING.
7. CORRECT ALL PUNCH LIST ITEMS FOUND DURING REMOTE COMMISSIONING.

CONTROLS SCHEDULE

MARK	DESCRIPTION	MANUFACTURER MODEL
TS	TEMPERATURE SENSOR	*PROVIDED WITH BAS
ATS	AVERAGING TEMPERATURE SENSOR	*PROVIDED WITH BAS
HS	HUMIDITY SENSOR	*PROVIDED WITH BAS

NOTES:
1. FOR TS, HS AND ATS LOCATIONS, REFER TO M1.2

WIRE LEGEND

MARK	WIRE/CABLE TYPE
———	CAT 5E
— · · —	18 AWG CONDUCTORS

BUILDING AUTOMATION SYSTEM NOTES

BAS1. THE DIAGRAM SHOWN ABOVE IS SCHEMATIC IN NATURE AND SHOWS THE GENERAL REQUIREMENTS FOR THE INSTALLATION OF THE BUILDING AUTOMATION SYSTEM. EXACT EQUIPMENT REQUIREMENTS AND QUANTITIES WILL VARY PER SITE. G.C., M.C., T.C.C. AND E.C. SHALL COORDINATE ALL EXACT EQUIPMENT AND INSTALLATION REQUIREMENTS WITH SUPPLIER PRIOR TO SUBMITTING BID FOR A COMPLETE AND FULLY FUNCTIONAL SYSTEM.

BAS2. THE BUILDING AUTOMATION SYSTEM ALSO HAS ADDITIONAL OPTIONS AVAILABLE SUCH AS MONITORING DOOR CONTACTS (RESTROOM & COOLER FREEZER), ENERGY METER, COOLER/FREEZER TEMP. ADDITIONAL OPTIONS MAY BE SELECTED ON CENTRAL PURCHASING PROJECT DETAIL FORM. G.C., M.C., T.C.C. AND E.C. SHALL COORDINATE ALL EXACT INSTALLATION REQUIREMENTS WITH SUPPLIER PRIOR TO SUBMITTING BID FOR A COMPLETE AND FULLY FUNCTIONAL SYSTEM.

BAS3. ELECTRICAL CONTRACTOR SHALL FURNISH AND INSTALL ALL LINE AND LOW VOLTAGE WIRING AND CONNECTIONS, INCLUDING BUT NOT LIMITED TO CONTROL POWER TO ALL BAS COMPONENTS AND POWER CIRCUITRY WIRING OF ALL LIGHTING CONTACTORS. COORDINATE INSTALLATION WITH SITE SPECIFIC BAS INSTALLATION DETAILS PROVIDED BY SUPPLIER.

LINGLE DESIGN GROUP INC
158 WEST MAIN STREET
LENA, IL 61048
815.369.9155
1764 BLAKE ST
DENVER, CO 8020
303.974.5873
WWW.LINGLEDESIGN.COM

DICKERSON ENGINEERING, INC.
Professional Electrical Engineers
3343 NORTH RIDGE AVENUE
ARLINGTON HEIGHTS, IL 60004
TEL. (847) 966-0260
WWW.DEI-PE.COM
ILLINOIS REGISTERED DESIGN FIRM # 184-000949

© ALL DRAWINGS AND WRITTEN MATERIAL CONTAINED HEREIN ARE THE PROPERTY OF THE LINGLE DESIGN GROUP, INC. THEY MAY NOT BE REVISED, COPIED, REUSED, OR DISCLOSED IN ANY MANNER WITHOUT WRITTEN AUTHORIZATION FROM THE ARCHITECT.

JUSTIN HERMANCE LICENSED 27273 KANSAS PROFESSIONAL ENGINEER
SIGNATURE
07/28/2026 DATE
04/30/2028 EXPIRATION DATE
COVERING ELECTRICAL DESIGN

STATE ID: 150405
NATIONAL #: 44936
PROJECT #: 25-079
DRAWN BY: DEI
CHECKED BY: AH/RS

DATE:
10/15/2025 - PERMIT / BID SET

REVISIONS
1 11/12/25 - QC COMMENTS/PROTO UPDATE
2 02/23/2026 - CITY COMMENTS
3 03/10/2026 - DECOR UPDATE
4 08/02/26 - OWNER COMMENTS / PROTOTYPE UPDATES

CLIENT
McDonald's USA, LLC

PROTOTYPE
BB20 4590 MS-HB
ISSUE DATE 08/27/25

ADDRESS
2320 METROPOLITAN AVE
KANSAS CITY, KS 66106

SHEET TITLE
LIGHTING CONTROLS

SHEET NUMBER:
E4.1

MLO, AIC: NOTES D7&D8, Mounting: flush, NEMA 1 — PANEL LP-1 — 225A, 208Y/120 VAC, 3PH, 4W, CB TYPE: BL or BLH

A (WATTS)	B	C	DESCRIPTION	BRKR REQ	TRIP POLES	CCT NO.	CCT NO.	TRIP POLES	BRKR REQ	DESCRIPTION	A (WATTS)	B	C
0			Spare		20A-1	1	2	20A-1	S	Flag Pole	220		
	0		Spare		20A-1	3	4	20A-1		Spare		0	
		0	Spare		20A-1	5	6	20A-1	S	Exterior Signage			294
0			Spare		20A-1	7	8	20A-1	S	Exterior Signage	294		
	294		Exterior Signage	S	20A-1	9	10	20A-1	S	Exterior Wall/Soffit Lights DT		114	
		193	Flood Lights & Canopy lights	S	20A-1	11	12	20A-1	S	Exterior Wall/Soffit Lights			114
42			Back of House Sconces	S,L	20A-1	13	14	20A-1		DCO In Road Sign Base	180		
	126		Linear LED Façade Lighting	S	20A-1	15	16	20A-1	L	Dr Alarm\CO2		524	
		0	Space		20A-1	17	18	30A-2		Lot Lights			480
96			Directional Sign	S	20A-1	19	20	I		I	480		
	96		Directional Sign	S	20A-1	21	22	30A-2		Lot Lights		240	
		120	COD lighting	S	20A-1	23	24	I		I			240
0			Spare		20A-1	25	26	30A-2		Lot Lights	480		
	180		Toy Display	S	20A-1	27	28	I		I		480	
		0	Spare	S	20A-1	29	30	30A-2		Spare			0
308			Dining Area Lighting	S	20A-1	31	32	I		I	0		
	180		Pendants/cove lights	S	20A-1	33	34	20A-1	L	BAS Controller		300	
		880	Kitchen Lighting	S	20A-1	35	36	20A-1	L	Lighting Control Panel			180
176			Restroom Lighting	S	20A-1	37	38	20A-1	S,L	Exit/Egress Lighting	80		
	520		Support Area Lighting	S	20A-1	39	40	60A-2	S	Mcd'S Road Sign		2496	
		0	Spare		20A-1	41	42	I	I	I			2496
										Total Connect	2356	5550	4997
										Connect Amps		36	Amps
										Demand Amps		45	Amps

MLO, AIC: NOTES D7 & D8, Mounting: MDP, NEMA 1 — PANEL AP-1 — 225A, 208Y/120 VAC, 3PH, 4W, CB TYPE: BL or BLH

A (WATTS)	B	C	DESCRIPTION	BRKR REQ	TRP PLS	CCT NO.	CCT NO.	TRIP PLS	BRKR REQ	DESCRIPTION	A (WATTS)	B	C
1224			Dco-manager's office (man offi)		20A-1	1	2	20A-2	G	Coffee brewer (presenter's booth)	1612		
	900		Dco-General Purpose	G	20A-1	3	4	I	I	I		1612	
		720	Dco-General Purpose	G	20A-1	5	6	20A-1	G	ABS (phase c, presenter's booth)			1788
120			Safe - (mo) DCO Gen Purp	L	20A-1	7	8	20A-1	G	Oj dispenser/ coffee cream disp	840		
	240		Remote Order Battery		20A-1	9	10	20A-1	G	CO2 Detector		120	
		960	Merge/audio sys/drv mon/Deliv.	G	20A-1	11	12	20A-1	G	Automated beverage sys			600
960			Washer		15A-1	13	14	20A-2	G	Coffee Brewer (front counter)	1612		
	1800		Hand Held Order		20A-1	15	16	I	I	I		1612	
		120	Computer Room (TF/1)		20A-1	17	18	30A-3	G	Heat treat combo shake			1560
2808			Espresso Brewer	G	40A-2	19	20	I	I	I	1560		
	2808		I	I	I	21	22	I	I	I		1560	
		1500	3-Vat fryer hood interlock		20A-1	23	24	20A-1		3-Vat fryer hood Interlock			1176
1320			Reach in Freezer-SW	G	20A-1	25	26	20A-2	H	Ice Machine Remote Cond 1400lb	104		
	1080		Frozen fry dispenser (fry wall)	G	20A-1	27	28	I	I	I		104	
		1620	4-Vat fryer hood interlock		20A-1	29	30	20A-1	G	Reach in Freezer-SW			1320
1500			Fry Bagging Station	L,G	20A-1	31	32	15A-3	H	Ice Machine Remote Cond 1000lb	1332		
	60		Hand Wash Timers	G	20A-1	33	34	I	I	I		1332	
		0	Spare	G	20A-1	35	36	I	I	I			1332
132			Ice mach - 1000 lb (self serve)		15A-1	37	38	15A-3	H	Ice Machine Remote Cond 1000lb	1332		
	132		Ice mach - 1000 lb (self serve)		15A-1	39	40	I	I	I		1332	
		1176	4-Vat fryer hd interlock		20A-1	41	42	I	I	I			1332
										Total Connect	16456	14692	15204
										Connect Amps		129	Amps
										Demand Amps		87	Amps

MLO, AIC: NOTES D7&D8, Mounting: MDP, NEMA 1 — PANEL AP-2 — 225A, 208Y/120 VAC, 3PH, 4W, CB TYPE: BL or BLH

A (WATTS)	B	C	DESCRIPTION	BRKR REQ	TRP PLS	CCT NO.	CCT NO.	TRIP PLS	BRKR REQ	DESCRIPTION	A (WATTS)	B	C
1609			Ice machine 1400LB	H	20A-3	1	2	20A-1		AIR COMPRESSOR	684		
	1609		I	I	I	3	4	20A-1		Janitors EF		100	
		1609	I	I	I	5	6	20A-1	G	Dco-General Purpose			540
144			Blender McFlurry	G	20A-1	7	8	20A-1	G	Refrig-wt-48"	600		
	180		Janitor's closet	G	20A-1	9	10	30A-2	H	Trash Compactor		2496	
		480	Water heater		20A-1	11	12	I	I	I			2496
864			Clm gril exhast hood interlock		20A-1	13	14	20A-1		Walk in cooler / freezer	600		
	864		Bulk oil system (sup area)	G	20A-1	15	16	20A-1		Walk in cooler / freezer		600	
		1668	Clm gril exhast hood interlock		20A-1	17	18	20A-2	G	Q'ing oven - P& S			1550
840			Meat freezer DW (grill side)	G	20A-1	19	20	I	I	I	1550		
	120		Clean in place panel	G	20A-1	21	22	20A-1	G	Specialty Coffee Refrigerator 27"		468	
		490	Reverse Osmosis, Filtration	G	20A-1	23	24	20A-1	G	Automated beverage sys			600
180			Dco in trash corrall	G	20A-1	25	26	20A-1	G	ABS (presenter's booth)	1788		
	1200		Bulk oil sys - support area (sa)	G	20A-1	27	28	20A-2	G	Q'ing oven - P& S		1550	
		1032	BIC Machine	G	20A-1	29	30	I	I	I			1550
324			Reach In SW fridge	G	20A-1	31	32	20A-2	G	Infusiion Tea Brewer	1352		
	120		Recirc pump		20A-1	33	34	I	I	I		1352	
		1632	Soda syst pack (support area)		20A-1	35	36	20A-1		Spare			0
3120			Soda syst pack (support area)		30A-3	37	38	20A-2	G	Q'ing oven - P& S	1602		
	3120		I		I	39	40	I	I	I		1602	
		3120	I		I	41	42	20A-1	G	Dco-General Purpose			540
										Total Connect	15257	15381	17307
										Connect Amps		133	Amps
										Demand Amps		88	Amps

MLO, AIC: NOTES D7&D8, Mounting: MDP, NEMA 1 — PANEL AP-3 — 225A, 208Y/120 VAC, 3PH, 4W, CB TYPE: BL or BLH

A (WATTS)	B	C	DESCRIPTION	BRKR REQ	TRP PLS	CCT NO.	CCT NO.	TRIP- PLS	BRKR REQ	DESCRIPTION	A (WATTS)	B	C
4671			4 Vat Fryer - Electric - S/S/S/S	G	50A-3	1	2	50A-3	G	4 Vat Fryer - Electric - S/S/S/S	4671		
	4671		I	I	I	3	4	I	I	I		4671	
		4671	I	I	I	5	6	I	I	I			4671
4671			4 Vat Fryer - Electric - S/S/S/S	G	50A-3	7	8	50A-3	G	4 Vat Fryer - Electric - S/S/S/S	4671		
	4671		I	I	I	9	10	I	I	I		4671	
		4671	I	I	I	11	12	I	I	I			4671
0			Space			13	14	50A-3	G	Clamshell Grill	2604		
	0		Space			15	16	I	I	I		2604	
		0	Space			17	18	I	I	I			2604
0			Space			19	20	50A-3	G	Clamshell Grill	5196		
	0		Space			21	22	I	I	I		5196	
		0	Space			23	24	I	I	I			5196
0			Space			25	26			Space	0		
	0		Space			27	28			Space		0	
			Space			29	30			Space			0
0		0	Space			31	32			Space	0		
	0		Space			33	34			Space		0	
		0	Space			35	36			Space			0
0			Space			37	38			Space	0		
	0		Space			39	40			Space		0	
		0	Space			41	42			Space			0
										Total Connect	26484	26484	26484
										Connect Amps		221	Amps
										Demand Amps		143	Amps

MLO, AIC: NOTES D7&D8, Mounting: MDP, NEMA 1 — PANEL AP-4 — 225A, 208Y/120 VAC, 3PH, 4W, CB TYPE: BL or BLH

A (WATTS)	B	C	DESCRIPTION	BRKR REQ	TRP PLS	CCT NO.	CCT NO.	TRIP PLS	BRKR REQ	DESCRIPTION	A (WATTS)	B	C
2604			Clamshell Grill	G	50A-3	1	2	30A-3	G	Combi Oven	1812		
	2604		I	I	I	3	4	I	I	I		1812	
		2604	I	I	I	5	6	I	I	I			1812
5196			Clamshell Grill	G	50A-3	7	8	30A-3	G	Combi Oven	1812		
	5196		I	I	I	9	10	I	I	I		1812	
		5196	I	I	I	11	12	I	I	I			1812
4671			3-Vat Fryer - Electric - F/F/F	G	50A-3	13	14	15A-1		Combi Oven Hood	960		
	4671		I	I	I	15	16	15A-1		Combi Oven Hood		960	
		4671	I	I	I	17	18			Space			0
4671			3-Vat Fryer - Electric - F/F/F	G	50A-3	19	20			Space	0		
	4671		I	I	I	21	22			Space		0	
		4671	I	I	I	23	24			Space			0
4671			3-Vat Fryer - Electric - F/F/F	G	50A-3	25	26			Space	0		
	4671		I	I	I	27	28			Space		0	
		4671	I	I	I	29	30			Space			0
0			Space			31	32			Space	0		
	0		Space			33	34			Space		0	
		0	Space			35	36			Space			0
0			Space			37	38			Space	0		
	0		Space			39	40			Space		0	
		0	Space			41	42			Space			0
										Total Connect	26397	26397	25437
										Connect Amps		217	Amps
										Demand Amps		141	Amps

MLO, AIC: NOTES D7&D8, Mounting:MDP, NEMA 1 — PANEL AP-5 — 225A, 208Y/120 VAC, 3PH, 4W, CB TYPE: BL or BLH

A (WATTS)	B	C	DESCRIPTION	BRKR REQ	TRP PLS	CCT NO.	CCT NO.	TRIP PLS	BRKR REQ	DESCRIPTION	A (WATTS)	B	C
600			Fridge/Freezer 2Dr Base	G	20A-1	1	2	20A-1		Warewasher Exhaust Fan	864		
	600		Fridge/Freezer 2Dr Base	G	20A-1	3	4	20A-2	G	Universal Holding Cabinet P&S		1581	
		600	Fridge/Freezer 2Dr Base	G	20A-1	5	6	I	I	I			1581
600			Fridge/Freezer 2Dr Base	G	20A-1	7	8	20A-2	G	Univeral Holding Cabinet P&S	1581		
	600		Fridge/Freezer 2Dr Base	G	20A-1	9	10	I	I	I		1581	
		864	Toilet Exhaust Fan	G	20A-1	11	12	20A-1	G	Univeral Holding Cabinet Table			240
540			Roof Receptacles	G	20A-1	13	14	20A-1		DT Power Window	120		
	600		Fridge/Freezer 2Dr Base	G	20A-1	15	16	20A-1		DT Power Window		120	
		2080	Frozen Carbonated Beverage	G	30A-2	17	18	20A-1		DT Power Window			120
2080			I	I	I	19	20	20A-2	G	Coffee Brewer (front counter)	1612		
	360		Delivery Tablets	G	20A-1	21	22	I	I	I		1612	
		600	Wall Mount Frz Unit SW HC	G	20A-1	23	24	20A-1	G	Pie Display			564
828			Bulk Oil System	G	20A-1	25	26	20A-1	G	Pie Display	564		
	2620		Universal Radiant Toaster	G	30A-1	27	28	20A-1		Spare		0	
		2620	I	I	I	29	30	20A-1		DCO-Muzak satellite system			120
3528			Warewasher - High Temp	G	40A-3	31	32	20A-1		Clg. Mt window recepts	1440		
	3528		I	I	I	33	34	20A-2	G	Humidified Holding Cabinet		947	
		3528	I	I	I	35	36	I	I	I			947
2676			Warewasher - High Temp	G	30A-3	37	38	25A-2	H	Remote condensing unit	1560		
	2676		I	I	I	39	40	I	I			1560	
		2676	I	I	I	41	42	20A-1		Spare			0
										Total Connect	18593	18385	16540
										Connect Amps		149	Amps
										Demand Amps		97	Amps

MLO, AIC: NOTES D7&D8, Mounting: MDP, NEMA 1 — PANEL AP-6 — 225A, 208Y/120 VAC, 3PH, 4W, CB TYPE: BL or BLH

A (WATTS)	B	C	DESCRIPTION	BRKR REQ	TRP PLS	CCT NO.	CCT NO.	TRIP PLS	BRKR REQ	DESCRIPTION	A (WATTS)	B	C
4212			Unit AC-1 (Cash Booth)		60A-2	1	2	20A-1	L,G	Hand Dryer	1092		
	4212		I		I	3	4	20A-1	L,G	Hand Dryer		1092	
		4212	Unit AC-2 (Presenter Booth)		60A-2	5	6	20A-1	L,G	Spare			0
4212			I		I	7	8	20A-1	L,G	Spare	0		
	0		Spare		20A-1	9	10	15A-2	H	Cooler Evaporator		104	
		0	Spare		20A-1	11	12	I	I	I			104
1200			Unit AC-3 (Rear Entrance)		20A-1	13	14	15A-2	H	Freezer Evaporator	1248		
	1200		Unit AC-4 (Storage Entrance)		20A-1	15	16	I	I	I		1248	
		660	Unit AC-5 (Forward Presenter)		20A-1	17	18	20A-1		Spare			0
0			Spare		20A-1	19	20	20A-1		Spare	0		
	0		Spare		20A-1	21	22	30A-2		Spare		0	
		0	Spare		20A-1	23	24			I			0
0			Spare		20A-1	25	26	20A-1	G	Crew Microwave	1200		
	0		Space			27	28	20A-1	G	Crew Smart Lockers		204	
		0	Space			29	30			Space			0
0			Space			31	32			Space	0		
	0		Space			33	34			Space		0	
		0	Space			35	36			Space			0
0			Space			37	38	20A-1		Roof receptacles	720		
	0		Space			39	40	20A-1	G	Dining furniture receptacles		720	
		0	Space			41	42	20A-1	G	Dining furniture receptacles			720
										Total Connect	13884	8780	5696
										Connect Amps		79	Amps
										Demand Amps		71	Amps

4

1200A MCB, NOTES D6, D7, & D8, Mounting: Free Standing, NEMA 1 — PANEL MDP — 208Y/120 VAC, 3PH, 4W

A (WATTS)	B	C	DESCRIPTION	BRKR REQ	TRP PLS	CCT NO.	CCT NO.	TRP PLS	BRKR REQ	DESCRIPTION	A (WATTS)	B	C
2356	5550	4997	Lighting Panel 1; LP-1		225A-3	1	2	225A-3		Appliance Panel; AP-1	16456	14692	15204
15257	15381	17307	Appliance Panel; AP-2		225A-3	3	4	225A-3	SHT	Appliance Panel; AP-3	26484	26484	26484
10680	10680	10680	*Roof Top Unit 1	H	100A-3	5	6	150A-3	L	CP Panel	8658	6408	8728
0	0	0	SPACE			7	8	80A-3	H	*Roof Top Unit 3	7925	7925	7925
18593	18385	16540	Appliance Panel; AP-5		225A-3	9	10	225A-3	SHT	Appliance Panel; AP-4	26397	26397	25437
9444	9564	0	KES Breaker Panel		125A-2	11	12	50A-3	H	*Roof Top Unit 2	3843	3843	3843
0	0	0	Spare	H,L	200A-3	13	14	225A-3		Apliance Panel; AP-6	13884	8780	5696
2966	2966	2966	Remote Cond Unit	H	50A-3	15	16	30A-3		SPD			
0	0	0	SPACE			17	18						
0	0	0	SPACE			19	20						
* SEE ELECT SHTS FOR CONDUIT AND WIRE SIZE										Total Connect	162943	157055	145807
										Connect Amps		1293	Amps

225 MLO AIC: SEE NOTES D7 & D8, Mounting: Flush — COMPUTER PANEL CP — 150A, 208Y/120 VAC, 3PH, 4W, CB TYPE: BL or BLH

A (WATTS)	B	C	DESCRIPTION	BRKR REQ	TRP PLS	CCT NO.	CCT NO.	TRIP- PLS	BRKR REQ	DESCRIPTION	A (WATTS)	B	C
1488			POS/Reg/Mon/Printer/Headset	L	20A-1	1	2	20A-1	L	Spare	0		
	1764		Pos Prep-Kvs Monitor / Rec Pmtr Video Mon	G, L	20A-1	3	4	20A-1	G, L	Receipt Printer/cashless		84	
		100	Cctv/Timer	L	20A-1	5	6	20A-1	L	Menu Bd-Digital/Media Player			1368
390			Coin Dispenser/Pos-Pc Hardware/POS timer/Vido	L	20A-1	7	8	20A-1	G, L	Pos-Pc Hardware Presenter's Booth /Video Mon. w/supports	600		
	180		Pos Video Monitor	G, L	20A-1	9	10	20A-1		Zoom Timer		720	
		600	Tech Rack	L	20A-1	11	12	30A-1	L	POS Tech Rack			360
0			Spare	L	20A-1	13	14	20A-1	L	POS Optical Isolator	120		
	1200		Tech Rack	L	20A-1	15	16	20A-1	L	Speaker Canopy #1		120	
		1440	Tech Rack	L	20A-1	17	18	20A-1	L	Speaker Canopy #2,			120
1080			Pos PC front counter	L	20A-1	19	20	20A-1	L	Office desk	1200		
	0		Spare	L	20A-1	21	22	20A-1	L	Office desk		1200	
		720	KVS mon/Register/Delvery	G, L	20A-1	23	24	20A-1	L	Spare			0
1860			Exterior Menu Boards	L	20A-1	25	26	20A-1	G, L	POS video monitor	360		
	0		Spare	L	20A-2	27	28	20A-1	G, L	Time Clock		60	
		1860	Exterior Menu Boards	L	20A-1	29	30	20A-1	L	Kiosks			1080
480			Equipment Rack	L	20A-1	31	32	20A-1	L	Kiosks	1080		
	0		Spare	L	20A-1	33	34	20A-1	L	Kiosks		1080	
		0	Space			35	36	20A-1	L	Digital Merchandiser			1080
0			Space			37	38			Space	0		
	0		Space			39	40			Space		0	
		0	Space			41	42			Space			0
										Total Connect	8658	6408	8728
										Connect Amps		66	Amps
										Demand Amps		83	Amps

SINGLE LINE RISER DIAGRAM

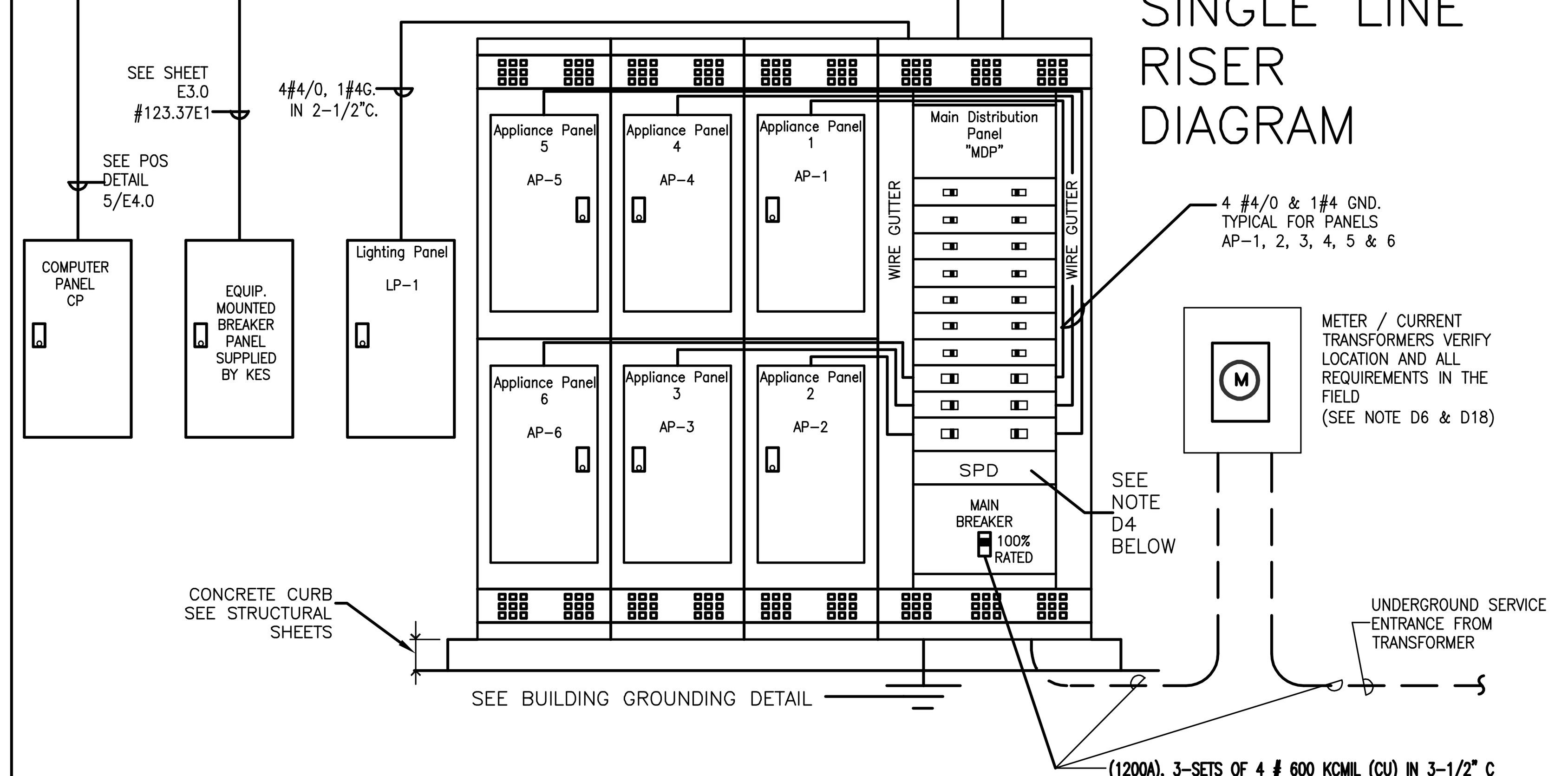

BUILDING ELECTRICAL GROUNDING DETAIL

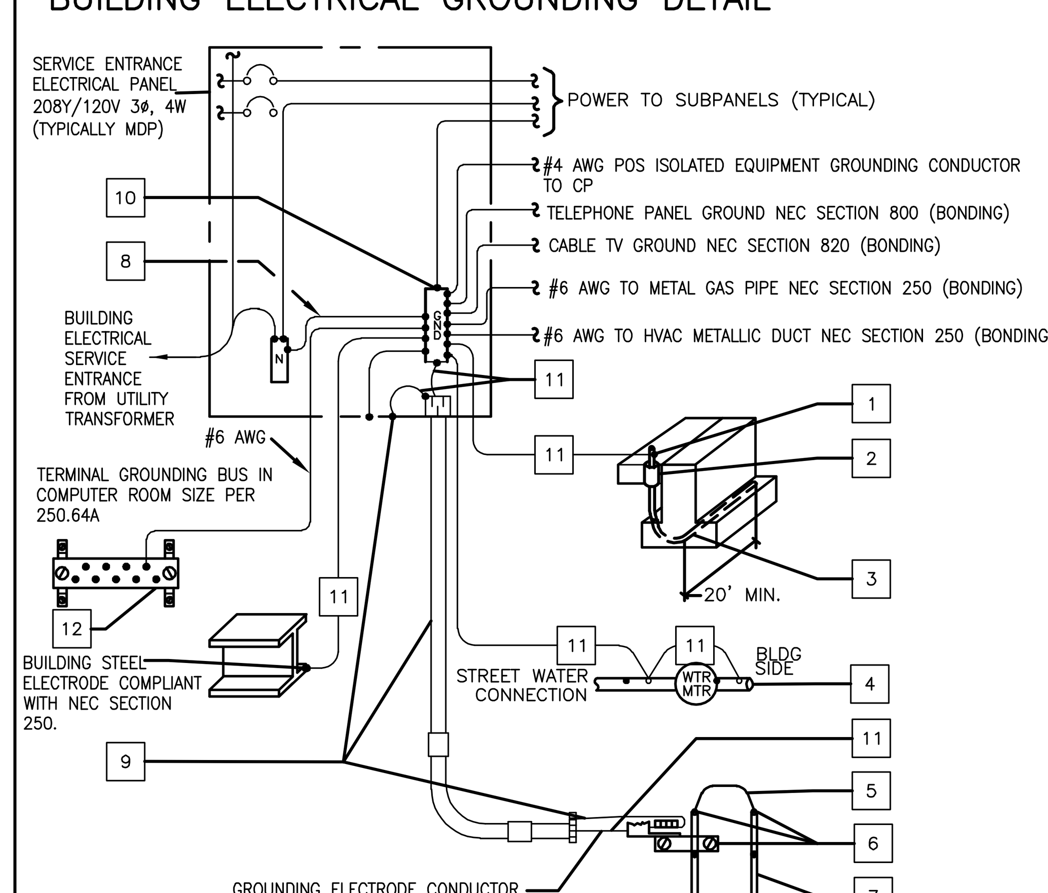

KEY NOTES

1. PROVIDE ENOUGH LENGTH TO TERMINATE DIRECTLY TO GROUND BUS OR USE BOLTED-TYPE CONNECTION DEVICE OR EXOTHERMIC WELD.
2. NON-METALLIC PROTECTIVE SLEEVE. LOCATE SLEEVE DIRECTLY UNDER THE ELECTRICAL SERVICE ENTRANCE PANEL. EC TO PROVIDE PLIABLE SEALANT BETWEEN COPPER WIRE AND SLEEVE.
3. FOR NEW CONSTRUCTION WHEN A SPREAD FOOTING OR DOWN TURNED SLAB IS USED, EC SHALL INSTALL A CONCRETE ENCASED ELECTRODE, COMPLIANT WITH NEC SECTION 250, CONSISTING OF AT LEAST 20 FEET OF BARE #4 AWG COPPER ENCASED IN 2 INCHES OF CONCRETE NEAR THE BOTTOM OF THE FOOTING OR FOUNDATION (BELOW GRADE) THAT IS IN DIRECT CONTACT WITH EARTH.
4. METAL UNDERGROUND WATER PIPE ELECTRODE COMPLIANT WITH NEC SECTION 250. THE GROUNDING CONNECTION TO THE INTERIOR METAL WATER PIPE SHALL BE MADE WITHIN THE FIRST FIVE FEET OF THE WATER PIPE ENTRANCE TO THE BUILDING.
5. IF MULTIPLE GROUNDING RODS ARE BEING USED OR NEED TO BE USED, THEY SHALL ALL BE BONDED TOGETHER PER NEC SECTION 250.
6. CLAMPS SUITABLE FOR DIRECT BURIAL OR EXOTHERMIC WELD.
7. 8'-0" X 5/8" CU ROD GROUNDING ELECTRODE COMPLIANT WITH NEC SECTION 250.
8. CU BONDING JUMPER SIZED PER NEC SECTION 250 OR FACTORY PROVIDED NEUTRAL TO GROUND BAR LINK. (THIS IS THE ONLY PLACE IN THE BUILDING WHERE N-G SHALL BE BONDED TOGETHER)
9. ALL METAL RACEWAYS CONTAINING GROUNDING ELECTRODE CONDUCTORS SHALL BE BONDED AT BOTH ENDS AS REQUIRED BY NEC SECTION 250. PROVIDE GROUNDING TYPE BUSHINGS & FITTINGS.
10. MCDONALD'S GROUNDING STANDARDS PURPOSELY EXCEED THOSE GIVEN BY THE NEC. THE ELECTRICAL CONTRACTOR SHALL PROVIDE A BUILDING GROUNDING SYSTEM MEETING NEC AND MCDONALD'S STANDARDS AS SHOWN ON THIS DRAWING.
11. CU GROUNDING ELECTRODE CONDUCTORS AND BONDING JUMPERS SHALL BE SIZED BASED UPON ELECTRICAL SERVICE SIZE PER NEC SECTION 250

800A	1000A	1200A
3/0 CU	3/0 CU	4/0 CU

● SHOWS CONNECTION/BONDING POINT

12. TERMINAL GROUNDING BUS AT 90"AFF. HARGER #GBI14212D.

DISTRIBUTION EQUIPMENT NOTES:

D1. ALL ELECTRICAL MATERIAL USED ON THIS PROJECT SHALL BE "UL" LISTED AND LABELED.

D2. THE EC/GC/AREA CONSTRUCTION MANAGER WHEN ORDERING PANELBOARDS, SHALL DETERMINE THE NUMBER OF SERVICE ENTRANCE CONDUCTORS, SIZE AND MATERIAL TYPE, AND SHALL PROVIDE THIS INFORMATION TO THE PANELBOARD SUPPLIER SO THAT THE APPROPRIATE LUGS CAN BE PROVIDED FROM THE FACTORY.

D3. ALUMINUM SERVICE ENTRANCE CONDUCTORS SHALL ONLY BE USED WHEN THEY ARE TERMINATED DIRECTLY TO THE LINE LUGS ON A C/T AND METERING CABINET, THE LINE LUGS OF A FUSIBLE DISCONNECT SWITCH OR TO THE LINE LUGS OF A MAIN LUG ONLY (6 HANDLE RULE) SERVICE ENTRANCE PANEL. ALUMINUM SERVICE ENTRANCE CONDUCTORS SHALL NOT BE TERMINATED TO THE LINE LUGS OF ANY MAIN BREAKER SINCE DOING SO WILL VIOLATE IT'S 100% UL RATING. IF ALUMINUM CONDUCTORS ARE USED AS PREVIOUSLY INDICATED THEY SHALL BE TERMINATED AS FOLLOWS, AND THE WIRE SIZE INCREASED DUE TO LOWER AMPACITY OF ALUMINUM. EXPOSED ALUMINUM CONDUCTOR STRANDS SHALL BE COATED WITH AN ANTI-OXIDANT IMMEDIATELY AFTER INSULATION IS STRIPPED AWAY. A COMPRESSION LUG SHALL BE PROPERLY INSTALLED ONTO THE EXPOSED ALUMINUM CONDUCTOR STRANDS, AND THAT COMPRESSION LUG SHALL THEN BE BOLTED TO THE TRANSFORMER TAPS AND SWITCHBOARD BUSS USING PROPERLY SIZED BOLTS, NUTS AND WASHERS. MERELY INSERTING ALUMINUM STRANDS UNDER A SCREW LUG SHALL NOT BE ACCEPTABLE.

D4. THE SURGE PROTECTIVE DEVICE (SPD) UNIT SHALL BE AN INTEGRAL UNIT PROVIDED AND INSTALLED BY THE SWITCHBOARD MANUFACTURER. ORDER APPROVED UNITS AS SHOWN IN D5.

D5. APPROVED SWITCHBOARDS, PANEL, & SPD SUPPLIER (IN ADDITION TO ORDERING SWITCHBOARD & PANELS ALSO ORDER SPD) SUPPLIERS:

SQUARE D VIA GRAYBAR
900 REGENCY DRIVE
GLENDALE HEIGHTS, IL 60139
TEL: (800)784-6059 OR (630) 671.6304

SPD INTEGRAL: I-LINE SERIES,
(208Y/120V, 3Ø)

D6. MAIN INCOMING METER / CURRENT TRANSFORMER CABINET, MAIN DISTRIBUTION PANEL MDP, SERVICE CABINET AND SWITCH SHALL BE BRACED FOR THE HIGHEST AVAILABLE FAULT CURRENT BUT NOT LESS THAN NEMA SYMMETRICAL RMS OF 65,000 AMPERES. CONTACT UTILITY/PM/GC/EC AS REQUIRED.

D7. BRANCH BREAKERS IN ALL LP, AP AND (CP IF USED) PANELS SHALL HAVE A NEMA SYMMETRICAL RMS RATING OF 10,000 AMPS. ALL CIRCUIT BREAKERS IN AP, LP AND CP PANELS SHALL BE SERIES RATED WITH THE CIRCUIT BREAKERS IN PANEL MDP SO THAT ALL CIRCUIT BREAKERS IN ALL BRANCH PANELBOARDS ARE PROTECTED AGAINST THE MAXIMUM FAULT CURRENT AVAILABLE AT THE MAIN SERVICE DISCONNECT. NO DESIGN CHANGES SHALL BE MADE TO THE DISTRIBUTION SYSTEM WITHOUT THE WRITTEN APPROVAL OF THE PROFESSIONAL ELECTRICAL ENGINEER OF RECORD. FOR A SERIES RATED SYSTEM USING PANEL BOARDS MANUFACTURED BY SQUARE-D USE A FULLY RATED MAIN BREAKER (SM-RGC) AS WELL AS OTHER FULLY RATED BREAKERS IN THE MDP (QG, FH, RGC) AND SERIES RATED BREAKERS (QO (B), QO (B) VH) IN THE SUB-BREAKERS.

D8. PANELBOARD SUPPLIER SHALL MARK CLEARLY & LEGIBLY ON THE DOORS OF ALL PANELS. DOORS OF ALL PANELS "CAUTION - SERIES RATED SYSTEM ______A AVAILABLE. IDENTIFIED REPLACEMENT COMPONENTS REQUIRED."

D9. ALL BREAKERS SHALL BE THE BOLT-ON TYPE. ALL CIRCUIT BREAKERS SHALL BE CAPABLE OF BEING LOCKED OUT TO COMPLY WITH OSHA REGULATION 1910.147 LOCKOUT/TAGOUT PROCEDURES.

D10. BRANCH BREAKERS OF 2P AND 3P CONFIGURATION SHALL HAVE A COMMON TRIP.

D11. ALL CIRCUIT BREAKERS USED TO SWITCH LIGHT FIXTURES SHALL BE APPROVED FOR THE PURPOSE AND MARKED "SWD".

D12. ALL HVAC CIRCUIT BREAKERS SHALL BE HACR TYPE. SEE TABLE ON SHEET E4.0 FOR CONDUIT AND WIRE SIZE REQUIREMENTS.

D13. PANELBOARD SUPPLIER SHALL PROVIDE ENGRAVED PLASTIC LAMINATED LABELS TO IDENTIFY ALL PANELS. LABEL FOR COMPUTER PANEL SHALL READ "COMPUTER ONLY PANEL".

D14. ALL PANELS SHALL BE PROVIDED WITH A KEY LOCK AND LATCH. EACH PANEL SHALL HAVE TWO KEYS WITH ALL PANELS KEYED ALIKE.

D15. PANELBOARD MANUFACTURER SHALL PROVIDE ARC-FLASH WARNING LABELS FOR MDP AND ALL BRANCH PANELBOARDS IN ACCORDANCE WITH NEC110. ELECTRICAL CONTRACTOR IS RESPONSIBLE FOR DATA COLLECTION INCLUDING BUT NOT LIMITED TO UTILITY TRANSFORMER DATA, CABLE LENGTHS, ETC AND COORDINATING WITH THE SWITCHBOARD SUPPLIER TO PERFORM AN ARC FLASH STUDY. CONTRACTOR SHALL BE RESPONSIBLE TO AFFIX THE LABELS ON THE DESIGNATED EQUIPMENT PROVIDED BY THE SUPPLIER.

D16. ALL RECEPTACLES IN THE KITCHEN AREA MUST HAVE GROUND FAULT CIRCUIT-INTERRUPTER PROTECTION PER NEC 210.8 (B) (2).

D17. MDP 100% RATED MAIN BREAKER, 1200 AMPS OR HIGHER SHALL BE EQUIPPED WITH ARC FLASH MAINTENANCE SETTING SWITCH FOR USE AS TEMPORARY ARC-FLASH MAINTENANCE SETTING SWITCH FOR USE AS A TEMPORARY ARC-FLASH INCIDENT ENERGY REDUCTION DEVICE DURING MAINTENANCE ACTIVITIES.

D18. BPU WILL SUPPLY THE CT METER BASE AND THE CTS TO THE CUSTOMER'S ELECTRICIAN ONCE PAYMENT FOR SERVICE HAS BEEN RECEIVED. THE ELECTRICIAN MUST SUBMIT THE PROPOSED CT CABINET SPECIFICATIONS TO BPU ELECTRIC ENGINEERING FOR REVIEW AND APPROVAL PRIOR TO INSTALLATION. BPU'S METERING DEPARTMENT WILL BE RESPONSIBLE FOR WIRING THE CTS TO THE METER BASE.

SEE SHEET E3.1 FOR GENERAL ELECTRICAL NOTES

BREAKER MODIFICATIONS:

G - GFCI PERSONNEL PROTECTION (5MA)
HID - HID & SWD RATED
L - HANDLE LOCK
H - HACR RATED
S - SWITCH DUTY RATED
SHT - SHUNT TRIP

TOTAL BUILDING 208Y/120V, 3 PHASE, 4-WIRE GENERAL SERVICE POWER BASED **ON NEC 220.88 FOR A "NOT ALL ELECTRIC"** NEW RESTAURANT.

ELECTRIC UTILITIES CALC

NEC Optional Method	(kW)	(A)
1. Continuous Loads:	37	102
2. Kitchen Loads:	337	936
3. HVAC Loads:	92	256
4. Cooling:	0	0
5. Total (1+2+3+4):	466	1293
6. Base Value (See 220.88):	325	902
7. Amount Over Base Value (5-6):	141	391
8. Demand Factor:	0.45	
9. Adjusted Value (8*7):	63	176
10. Adjusted Base Value (220.88):	262.5	729
11. Demand (9+10):	326	**905**

LINGLE DESIGN GROUP INC
158 WEST MAIN STREET
LENA, IL 61048
815.369.9155
1764 BLAKE ST
DENVER, CO 8020
303.974.5873
WWW.LINGLEDESIGN.COM

DICKERSON ENGINEERING, INC.
Professional Electrical Engineers
3343 NORTH RIDGE AVENUE
ARLINGTON HEIGHTS, IL 60004
TEL (847) 966-0290
WWW.DEI-PE.COM
ILLINOIS REGISTERED DESIGN FIRM # 184-000949

© ALL DRAWINGS AND WRITTEN MATERIAL CONTAINED HEREIN ARE THE PROPERTY OF THE LINGLE DESIGN GROUP, INC. THEY MAY NOT BE REVISED, COPIED, REUSED, OR DISCLOSED IN ANY MANNER WITHOUT WRITTEN AUTHORIZATION FROM THE ARCHITECT.

AUGUST HERNANDEZ LICENSED 27273 KANSAS PROFESSIONAL ENGINEER

SIGNATURE
07/28/2026 — DATE
04/30/2028 — EXPIRATION DATE
COVERING ELECTRICAL DESIGN

STATE ID: 150405
PROJECT #: 25-079
NATIONAL #: 44936
DRAWN BY: DEI
CHECKED BY: AH/RS

DATE:
10/15/2025 - PERMIT / BID SET

REVISIONS
1 11/12/25 - QC COMMENTS/PROTO UPDATE
2 02/23/2026 - CITY COMMENTS
3 03/10/2026 - DECOR UPDATE
4 08/02/26 - OWNER COMMENTS / PROTOTYPE UPDATES

CLIENT
McDonald's USA, LLC

PROTOTYPE
BB20 4590 MS-HB
ISSUE DATE 08/27/25

ADDRESS
2320 METROPOLITAN AVE
KANSAS CITY, KS 66106

SHEET TITLE
PANEL SCHEDULES & ONE LINE

SHEET NUMBER:
E4.2

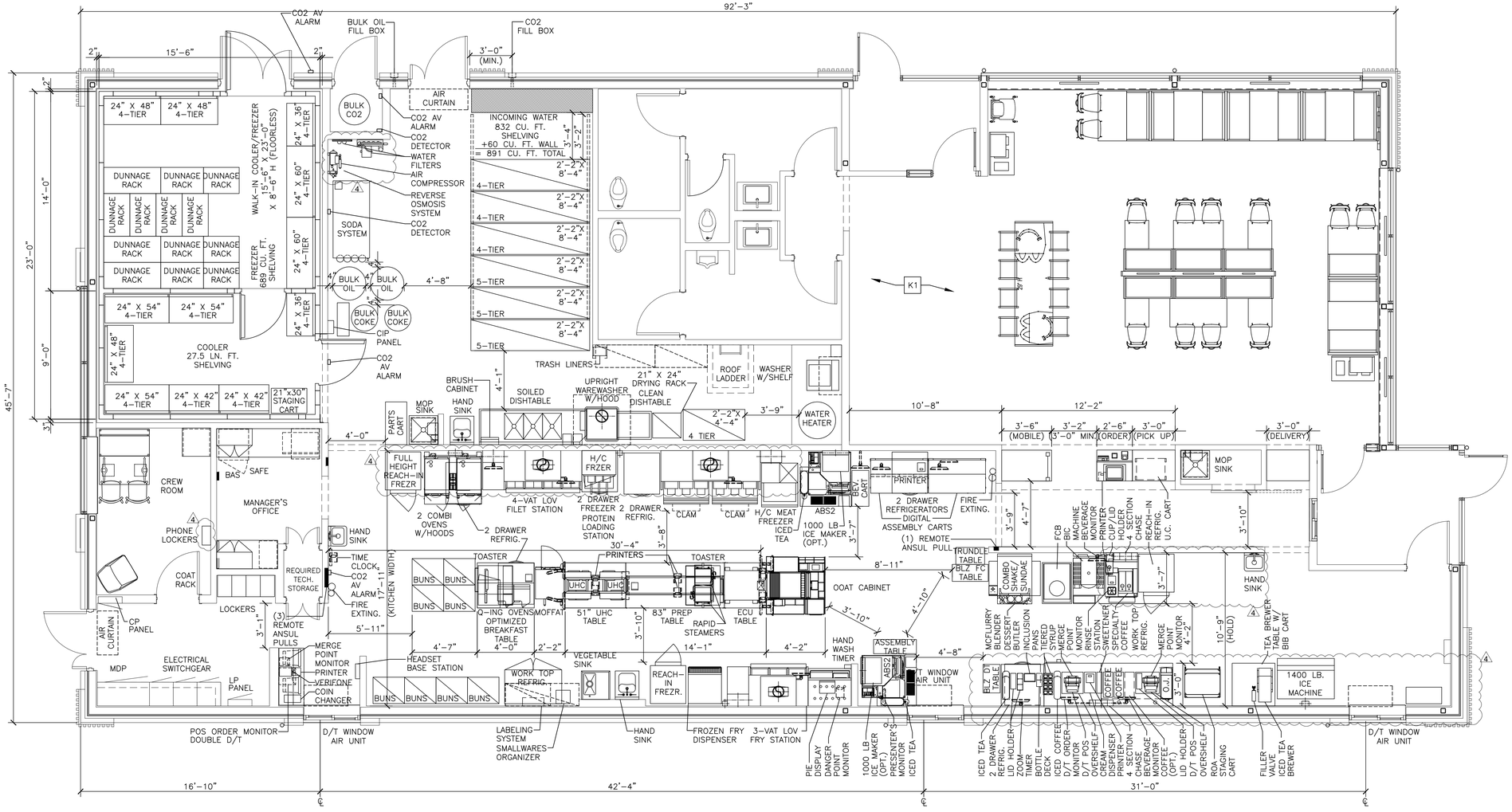

1 K1.0 KITCHEN COVER SHEET

1/4" = 1'-0"

KEYED NOTES

K1 CUSTOMER KIOSK & DECOR LAYOUT FOR REFERENCE ONLY. VERIFY KIOSK PLACEMENT PER USRD APPROVED KIOSK REVIEW

LINGLE DESIGN GROUP INC
158 WEST MAIN STREET
LENA, IL 61048
815.369.9155
1764 BLAKE ST
DENVER, CO 8020
303.974.5873
WWW.LINGLEDESIGN.COM

© ALL DRAWINGS AND WRITTEN MATERIAL CONTAINED HEREIN ARE THE PROPERTY OF THE LINGLE DESIGN GROUP, INC. THEY MAY NOT BE REVISED, COPIED, REUSED, OR DISCLOSED IN ANY MANNER WITHOUT WRITTEN AUTHORIZATION FROM THE ARCHITECT.

CARL LINGLE LICENSED 7997 KANSAS ARCHITECT

10-15-25

STATE ID: 150405
PROJECT #: 25-079
NATIONAL #: 44936
DRAWN BY: RP
CHECKED BY: JK

DATE:
10/15/25 - PERMIT / BID SET

REVISIONS

1. 11/12/25 - QC COMMENTS/PROTO UPDATE
2. 02/12/26 - CITY COMMENTS
3. 03/10/26 - DECOR UPDATE
4. 08/02/26 - OWNER COMMENTS / PROTOTYPE UPDATES

CLIENT

McDonald's USA, LLC

PROTOTYPE
BB20 4590 MS-HB
ISSUE DATE 08/27/25

ADDRESS
2320 METROPOLITAN AVE
KANSAS CITY, KS 66106

SHEET TITLE
KITCHEN
COVER SHEET

SHEET NUMBER:
K1.0

DRAWING NOTES

1. ALL DIMENSIONS SHOWN ARE TAKEN TO FACE OF WALL FINISH
2. * INDICATES OPTIONAL EQUIPMENT
3. KES TO VERIFY ALL BLOCKING FOR WALL MOUNTED EQUIPMENT AS REQUIRED BY GENERAL NOTE 9 ON A1.0 PRIOR TO INSTALLATION

SEE SHEET K2.1 FOR EQUIPMENT SCHEDULE

NOTE: DIMENSION VARIES BETWEEN CLR/FZR & EXT. WALL 2" MIN. – 4" MAX. SEE ARCH DWGS.

INCOMING WATER

(TRACK W/ STOPS)

REQUIRED TECH STORAGE

ELECTRICAL PANELS

1 K2.0 KITCHEN EQUIPMENT PLAN
1/4" = 1'-0"

2 K2.0 COMPUTER CLOSET RACK
1/4" = 1'-0"

3 K2.0 FRONT COUNTER
1/4" = 1'-0"

4 K2.0 FRONT COUNTER ELEVATION
1/4" = 1'-0"

5 K2.0 BEVERAGE CELL (INTERIOR WALL)
1/4" = 1'-0"

6 K2.0 BEVERAGE CELL (EXTERIOR WALL)
1/4" = 1'-0"

7 K2.0 COMPACT OPTIMIZED PREP LINE
1/4" = 1'-0"

LINGLE DESIGN GROUP INC
158 WEST MAIN STREET
LENA, IL 61048
815.369.9155
1764 BLAKE ST
DENVER, CO 8020
303.974.5873
WWW.LINGLEDESIGN.COM

© ALL DRAWINGS AND WRITTEN MATERIAL CONTAINED HEREIN ARE THE PROPERTY OF THE LINGLE DESIGN GROUP, INC. THEY MAY NOT BE REVISED, COPIED, REUSED, OR DISCLOSED IN ANY MANNER WITHOUT WRITTEN AUTHORIZATION FROM THE ARCHITECT.

CARL LINGLE LICENSED 7997 KANSAS ARCHITECT
10-15-25

STATE ID: 150405
NATIONAL #: 44936
PROJECT #: 25-079
DRAWN BY: RP
CHECKED BY: JK

DATE:
10/15/25 - PERMIT / BID SET

REVISIONS
1 11/12/25 - QC COMMENTS/PROTO UPDATE
2 02/12/26 - CITY COMMENTS
3 03/10/26 - DECOR UPDATE
4 08/02/26 - OWNER COMMENTS / PROTOTYPE UPDATES

CLIENT
McDonald's USA, LLC

PROTOTYPE
BB20 4590 MS-HB
ISSUE DATE 08/27/25

ADDRESS
2320 METROPOLITAN AVE
KANSAS CITY, KS 66106

SHEET TITLE
KITCHEN EQUIPMENT PLAN & ELEVATIONS

SHEET NUMBER:
K2.0

x = Optional Equipment
GC = General Contractor
R = Relocated Equipment
VIF = Verify in Field

EQUIPMENT SCHEDULE 4

ITEM	O	QTY	DESCRIPTION	MANUFACTURER	MODEL #	UL	NSF	FURNISHED	GENERAL REMARKS	SPECIAL REQUIREMENTS
1.40		1	SERVICE POD – 30"	DECOR	SEE PLAN	–	2	GC	–	
1.51		1	PICKUP POD – 36"	DECOR	SEE PLAN	–	2	GC	–	
1.52		1	PICKUP POD – 42"	DECOR	SEE PLAN	–	2	GC	–	
1.63		1	McDELIVERY PICKUP COUNTER	DECOR	SEE PLAN	–	2	GC	–	
2.05		1	UNDER COUNTER CART – 24"W x 18"D FRONT COUNTER	INTERMETRO	UC18–DMS	–	2	KES	–	
9.08		2	UTILITY CHASE – ICE MAKER ON ABS VERSION	KES	5"x8"x23"	–	2	KES	CONCEALS WATER AND CONDENSING UNIT LINES	
9.15		1	UTILITY CHASE – FFDT INTERIOR WALL	KES	20"x5"x76"	–	2	KES	4 SECTION CHASE FOR BUYOUT RECEPTACLES, POS, CO2 AND WATER	
9.16		1	UTILITY CHASE – FFDT EXTERIOR WALL	KES	20"x5"x76"	–	2	KES	4 SECTION CHASE FOR BUYOUT RECEPTACLES, POS AND WATER	
9.18		2	UTILITY CHASE – WALL VERSION	KES	4"x4"x82"	–	2	KES	CHASE FOR BULK OIL LINES, MOUNT AT 2'–0"	
9.20		1	UTILITY CHASE – COMBI CELL	KES	4"x8"x84"	–	2	KES	CHASE FOR BUYOUT RECEPTACLES AND WATER	
19.00		2	DIGITAL ASSEMBLY CART – 48"	INTERMETRO	MCDDAC–48	–	2	KES	–	
19.04		1	ROA STAGING CART – 24"x 30"	INTERMETRO	MCDROA–2430	–	2	KES	–	
20.01		2	AUTOMATED BEVERAGE SYSTEM 2.0	IMI CORNELIUS	621058590LON	–	–	KES	INSTALLATION KIT INCLUDES STAINLESS STEEL CHASE & DATA LINE	
21.01		3	COFFEE BREWER (THERMAL POTS)	BUNN–O– MATIC	AXIOM–DV–3	E32066	4	KES	W/ELECTRONIC CONTROLLER FOR CONVERSION TO LOW OR HIGH VOLTAGE	
23.12		1	COFFEE CREAM DISPENSER	SURESHOT	AC110–PC–51	E217698	20	KES	–	
23.14		1	SUGAR/SWEETENER DISPENSER	SURESHOT	AC2–GP–1–G38	E217698	18	KES	–	
23.17		1	SPECIALTY COFFEE	THERMOPLAN	BW4–CTS	–	4	KES	–	
24.02		1	JUICE DISPENSER	BUNN–O– MATIC	JDF–2S	–	18	KES	–	
25.01		4	SLIMLINE ICED BEVERAGE DISPENSER	BUNN–O– MATIC	TDO–N	E32066	4	KES	KES TO VERIFY EXACT QUANTITY PER MARKET	
25.06		3	SLIMLINE ICED BEVERAGE DISPENSER – SHORT	BUNN–O– MATIC	TDO–N LP	E32066	4	KES	KES TO VERIFY EXACT QUANTITY PER MARKET	
25.07		1	INFUSION TEA BREWER – MIS	BUNN–O– MATIC	ITCB–DV	E32066	4	KES	PROVIDED WITH BREWER, INSTALLATION KIT AND TDO–N BOOSTER	
25.13		1	GLASS FILLER HOSE ASSEMBLY	FISHER	H–14650–KIT	–	–	GC	–	
25.95		3	SLIMLINE ICED BEVERAGE DISPENSER – 2 TIER STAND	KES	–	–	2	KES	–	
26.01		1	TEA BREWER TABLE – 36"X36"	ISS SHELVING	WST1758C	–	2	KES	–	
31.03		1	SODA SYSTEM PACKAGE B.I.B.(RECIRCULATING– 3 TOWERS) – REMOTE	MULTIPLEX	50MR04	SA4632	18	KES	–	
32.02		1	REVERSE OSMOSIS WATER FILTRATION SYSTEM – TANKLESS	EVERPURE	MRS–600HE	–	–	KES	FOR COFFEE MAKER, ESPRESSO MACHINE, AND RAPID BUN STEAMER	
32.04		1	WATER FILTRATION SYSTEM	EVERPURE	EV9337–26	–	–	KES	–	
32.05		1	WATER FILTRATION SYSTEM	EVERPURE	EV9272–24	–	–	KES	FOR COMBI OVENS AND STAGING CABINET	
34.00		1	AIR COMPRESSOR	GAST	87R–10BA	–	–	KES	PROVIDE WITH AIR MANIFOLD	
36.00		2	BULK COKE	CHART INDUSTRIES	10667511	–	18	MANU–FACTURER	SYRUP LINES BY CHART INDUSTRIES	
37.00		1	BULK CO2 – 750 LB.	CHART INDUSTRIES	CARBO–MAX 750	–	–	MANU–FACTURER	–	
37.03		2	CO2 SAFETY SYSTEM	SEE RMKS	–	–	–	KES	SEE MECHANICAL DRAWINGS	INCLUDES DETECTOR, PWER MONITOR W/ TROUBLE SIGNAL AND (4) AV ALARMS
38.00		1	CLEAN IN PLACE PANEL	CHART INDUSTRIES	10667431	–	18	MANU–FACTURER	MOUNT 6"W x 7"H. BOX @ 6'–0" AFF TO BOX CENTER LINE	
39.10		1	ICE MACHINE – 1400 LB.	MANITOWOC	IYT1500N3/ D970	SA4027	12	KES	USE HEADMASTER KIT K00221	
39.15		2	ICE MACHINE – 1000 LB.	MANITOWOC	IBT1020C–161	SA4027	12	KES	CONDENSER: CVDT1200	
40.00		1	ICE MACHINE CHASE	KES	4"x6"x48"	–	2	KES	CONCEALS WATER AND CONDENSING UNIT LINES	
41.06		1	ICE MACHINE REMOTE CONDENSER – 1400 LB.	MANITOWOC	JCT–1500	SA4027	12	KES	–	
41.09		2	ICE MACHINE REMOTE CONDENSER – 1000 LB.	MANITOWOC	CVDT1200–263A	SA4027	12	KES	–	
43.21		1	OPTIMIZED ORDER ASSEMBLY TABLE	KES	90001	E152097	2	KES	–	
44.46		2	SMALL RISER SHELF – 18" TO 30"	FRANKE	18006010	–	2	KES	–	
44.60		1	MODULAR CENTER ISLAND CABINET – 36"	H&K	–	–	2	KES	–	
44.61		1	MODULAR CENTER ISLAND CABINET – 48"	H&K	–	–	2	KES	–	
44.62		1	MODULAR CENTER ISLAND CABINET– 60"	H&K	–	–	2	KES	–	
46.13		2	SYRUP BOTTLE RACK	H&K	HK15028	–	2	KES	–	
46.14		2	BOTTLE DOCK	KES	95058	–	2	KES	–	
46.15		1	INCLUSION PAN HOLDER	KES	95099	–	2	KES	–	
46.16		1	CUP DISPENSER VERTICAL F/ 3 TUBES	H&K	79095	–	2	KES	–	
49.00		1	CO2 FILL BOX – 6 1/2"W x 18"H	CHART INDUSTRIES	8512629	–	–	MANU–FACTURER	SEE EXTERIOR ELEVATIONS FOR MOUNTING HEIGHT. INSTALLED BY GC	
51.03		2	CUP LID HOLDER 3 HIGH S/S	KES	–	–	2	KES	–	
51.04		3	CUP LID HOLDER SINGLE STACK 8" HIGH	KES	–	–	2	KES	–	
51.11		1	CUP LID HOLDER – SINGLE WIDE, 3 TIER	H&K	95020	–	2	KES	–	
52.01		1	REMOTE CONDENSING UNIT – 50MR04	MULTIPLEX	TS–0895	SA2298	–	KES	ORDER PRE–CHARGE LINE #204017 – VIF LENGTH FROM UNIT TO SODA SYST.	
61.00		1	FRY BAGGING STATION 36"	KES	FB25A	E99018	2	KES	–	
65.30		1	3–VAT LOV FRYER – ELECTRIC – F/F/F	HENNY PENNY	LVE–203	E30993	4	KES	–	IDLE ENERGY RATE=0.73kW, ENERGY EFFICIENCY=87%
66.47		1	4–VAT LOV FRYER – ELECTRIC – S/S/S/S	HENNY PENNY	LVE–204	E30993	4	KES	–	IDLE ENERGY RATE=0.73kW, ENERGY EFFICIENCY=87%
69.00		2	CAPTURE JET PLENUM – FRYER	HALTON	CJP–F	MH27607	2	KES	ATTACH TO UNIVERSAL EXHAUST HOOD	
73.00		1	UNIVERSAL EXHAUST HOOD 3–VAT FRYER	KES	UH–50	MH12755	2	KES	–	
74.00		1	UNIVERSAL EXHAUST HOOD 4–VAT FRYER	KES	UH–65	MH12755	2	KES	–	
79.26		2	VENTLESS HOOD FOR COMBI OVEN	CONVOTHERM	CONOVENT MINI 6.10	E325060	2	KES	–	
80.00		3	MECHANICAL CHASE	KES	9"x18" SOCL.	E163328	2	KES	–	
81.00		1	PROTEIN LOADING STATION KIT	KES	272436	–	2	KES	–	
81.01		1	PRODUCT LANDING SHELF – SOLID TOP	KES	–	–	2	KES	–	
85.05		1	FROZEN FRY DISPENSER	RAM	280–FP	E140753	4	KES	–	
91.02		1	WALL MOUNT FREEZER UNIT–SINGLE WIDE–HIGH CAPACITY	KES	HCWF1	SA7329	7	KES	AIR–COOLED, SELF–CONTAINED – MOUNT BOTTOM AT 51" AFF	HCWF1.99A INSTALL HARDWARE KIT REQUIRED
94.01		1	UNIVERSAL EXHAUST HOOD 2–FULL–CLAM GRILLS	KES	UH–83	MH12755	2	KES	–	
96.21		2	36" NEXT GEN 3–PLATEN CLAMSHELL GRILL – ELECTRIC	GARLAND	ME–3PX	E28898	4	KES	–	
97.08		1	MEAT FREEZER – DOUBLE WIDE – HIGH CAPACITY – RIGHT HAND	KES	HCMF30B–RH	SA6032 S	2	KES	AIR–COOLED, SELF–CONTAINED	
99.00		1	GRILL TOOL ORGANIZER	KES	–	–	2	KES	–	
110.01		1	OPTIMIZED BREAKFAST TABLE	KES	OBT	–	2	KES	–	
114.00		1	HUMIDIFIED HOLDING CABINET	MOFFAT	HP10T–LMD	197	4	KES	–	
116.23		2	UNIVERSAL HOLDING CABINET – HIGH DENSITY – 2–SIDED – PIN & SLEEVE	FRYMASTER	UHCHD6T	E44571	4	KES	–	
117.30		1	UHC TABLE COPL – 2 SIDED – 51"D x 34"W – PIN&SLEEVE	KES	91011	–	2	KES	–	
118.00		1	Q'ING OVEN – PIN & SLEEVE	AMANA	MC23MPW2	E40456	4	KES	–	
118.03		2	Q'ING OVEN – PIN & SLEEVE	ACP	MCMOC24	–	4	KES	–	
122.27		1	NEXT GEN. UNIVERSAL RADIANT TOASTER – PIN & SLEEVE	ANTUNES	HRT–5H	–	4	KES	–	
122.28		1	NEXT GEN. UNIVERSAL CONTACT TOASTER – PIN & SLEEVE	ANTUNES	HCT–5H	–	4	KES	–	
123.36		1	ECU TABLE – COPL	KES	90165	–	2	KES	–	
123.37		1	BREAKER PANEL– 125 AMP – 1 PHASE – EQUIPMENT MOUNTED	KES	–	–	–	KES	–	
123.40		1	PREP TABLE – HD – 2–SIDED COPL – 38"D x 83 1/2" – PIN & SLEEVE W/REF.	KES	91010	–	2	KES	–	
125.00		2	RAPID BUN STEAMER	PRINCE CASTLE	625–MFY	–	4	KES	–	
130.00		2	COMBI OVEN	CONVOTHERM	MS6102083LCMD1	E360598	4	KES	–	0.89kW, 69% STEAM MODE, 0.61kW, 81% CONVECTION MODE
134.02		1	VEGETABLE SINK	KES	SK04–4	–	2	KES	PROVIDE W/ BOWL COVER	
139.04		1	COMBI OVEN STAND – DOUBLE WIDE	KES	–	–	2	KES	–	
146.00		2	BUTTER WARMER	H&K	90016	–	–	KES	–	
151.12		1	CLEAN DISHTABLE – LEFT HAND – 28.23"	KES	SK–SPL	–	2	KES	–	
151.46		1	SOILED DISHTABLE – RIGHT HAND – 90.5" WIDE	KES	SK–SPL	–	2	KES	–	
152.04		1	WAREWASHER HOOD	KES	–	△1	3		TYPE 2 HOOD FOR NON GREASE APPLICATION – REQUIRED PER CODE	
152.09		1	WAREWASHER – HIGH TEMP	ECOLAB	XL–HTHH	E5956	3	MANU–FACTURER	–	IDLE ENERGY RATE=0.486kW, WATER CONSUMPTION=0.84 GAL./RACK
153.00		1	SCULLERY SHELVING KIT – 3 TIER – 14" x 36"	INTERMETRO	SHSS–4	–	2	KES	–	
153.04		1	SMALLWARE WALL ORGANIZER	INTERMETRO	SW1812–MPS	–	2	KES	–	
153.06		1	REUSABLE DRYING RACK	INTERMETRO	MCD2124–DRY6	–	2	KES	–	
154.00		1	BRUSH CABINET	KES	8047	–	4	KES	–	
157.00		1	TRASH LINER DISPENSER SHELF	KES	A0053	–	2	KES	–	
159.03		1	UNIVERSAL PARTS CART – 36" W	INTERMETRO	MCD–1836UPC	–	2	KES	–	
160.01		4	CHEMICAL SYSTEM	ECOLAB	–	–	–	MANU–FACTURER	–	
163.00		2	FIRE EXTINGUISHER – 5 LB. – ABC	ANSUL	SEE RMKS	–	–	SEE RMKS	LOCAL ANSUL AGENT SPECIFIES, SUPPLIES & LOCATES PER LOCAL CODE	
163.01		2	FIRE EXTINGUISHER – 6 L. – K GUARD	ANSUL	SEE RMKS	–	–	SEE RMKS	LOCAL ANSUL AGENT SPECIFIES, SUPPLIES & LOCATES PER LOCAL CODE	
163.02		4	REMOTE ANSUL PULL	ANSUL	4835	EX3470	–	SEE RMKS	CODE MAY REQUIRE LOCAL ANSUL AGENT TO SUPPLY	
171.01		1	WALK–IN COOLER / FREEZER FLOORLESS	NORLAKE	–	E42763	7	KES	–	
174.48		1	REMOTE CONDENSING UNIT	MASTER–BILT	MSMC015MB	SA5649	–	KES	ALT. VENDOR HEATCRAFT. VERIFY EQUIPMENT SELECTION AND POWER REQ. W/ KES.	
174.50		1	REMOTE CONDENSING UNIT	MASTER–BILT	MSLA040MC	SA5649	–	KES	ALT. VENDOR HEATCRAFT. VERIFY EQUIPMENT SELECTION AND POWER REQ. W/ KES.	

x = Optional Equipment
GC = General Contractor
R = Relocated Equipment
VIF = Verify in Field

EQUIPMENT SCHEDULE 4

ITEM	O	QTY	DESCRIPTION	MANUFACTURER	MODEL #	UL	NSF	FURNISHED	GENERAL REMARKS	SPECIAL REQUIREMENTS
175.22		1	COOLER EVAPORATOR	MASTER–BILT	E1MCK140B–MA	SA5649	–	KES	ALT. VENDOR HEATCRAFT. VERIFY EQUIPMENT SELECTION AND POWER REQ. W/ KES.	
176.31		1	FREEZER EVAPORATOR	MASTER–BILT	E1LAK140B–ME	SA5649	–	KES	ALT. VENDOR HEATCRAFT. VERIFY EQUIPMENT SELECTION AND POWER REQ. W/ KES.	
177.03		1	REACH–IN REFRIGERATOR–SINGLE WIDE	BEVERAGE AIR	HR1HC–1HS	SA2651	7	KES	–	
178.05		2	REACH–IN FREEZER – SINGLE WIDE	BEVERAGE AIR	HF1HC–1HS	SA2651	7	KES	–	
181.13		1	REFRIGERATOR – SPECIALTY COFFEE– 27" WIDE	TRUE	TUC–27 MCDCF1	SA33040	7	KES	RIGHT–HAND HINGED	
181.14		1	REFRIGERATOR – WORKTOP – 48" WIDE	TRUE	TWT–48 MCD1	SA4065	7	KES	–	
183.00		2	REFRIGERATOR/FREEZER – 2 DRAWER BASE – 30" W X 33" H	KES	18012498	SA4044	7	KES	–	
183.02		4	REFRIGERATOR/FREEZER – 2 DRAWER BASE – 30" W X 30" H	KES	18021304	SA4044	7	KES	–	
187.71		1	FREEZER SHELVING 24" x 36" x 74" H. – 4–TIER	ISS SHELVING	FSMS/FSMA742436E	–	2	KES	–	
187.73		2	FREEZER SHELVING 24" x 48" x 74" H. – 4–TIER	ISS SHELVING	FSMS/FSMA742448E	–	2	KES	–	
187.75		2	FREEZER SHELVING 24" x 60" x 74" H. – 4–TIER	ISS SHELVING	FSMS/FSMA742460E	–	2	KES	–	
188.00		7	DUNNAGE RACK 22" x 36"	INTERMETRO	HP2236PD	–	2	KES	–	
188.07		1	UNIVERSAL STAGING CART	ISS SHELVING	WST1384Y	–	2	KES	–	
188.08		3	DUNNAGE RACK 22" x 30"	INTERMETRO	HP2230PD	–	2	KES	–	
188.09		3	DUNNAGE RACK 22" x 48"	INTERMETRO	HP2248PD	–	2	KES	–	
189.71		1	COOLER SHELVING 24" x 36" x 74" H. – 4–TIER	ISS SHELVING	FSMS/FSMA742436E	–	2	KES	–	
189.72		2	COOLER SHELVING 24" x 42" x 74" H. – 4–TIER	ISS SHELVING	FSMS/FSMA742442E	–	2	KES	–	
189.73		1	COOLER SHELVING 24" x 48" x 74" H. – 4–TIER	ISS SHELVING	FSMS/FSMA742448E	–	2	KES	–	
189.74		3	COOLER SHELVING 24" x 54" x 74" H. – 4–TIER	ISS SHELVING	FSMS/FSMA742454E	–	2	KES	–	
191.01		1	VALANCE SHELVING – 18" x 48"	INTERMETRO	M1848C–MP	–	2	KES	MOUNT AT 6'–8"AFF TO SHELF BOTTOM UNLESS OTHERWISE NOTED	
191.02		1	VALANCE SHELVING – 18" x 60"	INTERMETRO	M1860C–MP	–	2	KES	MOUNT AT 6'–8"AFF TO SHELF BOTTOM UNLESS OTHERWISE NOTED	
191.03		1	VALANCE SHELVING – 18" x 30"	INTERMETRO	M1830C–MP	–	2	KES	MOUNT AT 5'–0"AFF TO SHELF BOTTOM FOR ABOVE WASHER APPLICATION	
191.04		1	VALANCE SHELVING – 18" x 36"	INTERMETRO	M1836C–MP	–	2	KES	MOUNT AT 5'–0"AFF TO SHELF BOTTOM –W/ST STL LINER FOR SALAD EQUIP	
191.06		1	VALANCE SHELVING – 18" x 42"	INTERMETRO	M1842C–MP	–	2	KES	MOUNT AT 6'–8"AFF TO SHELF BOTTOM UNLESS OTHERWISE NOTED	
194.32		1	DRY SHELVING 26" x 52" x 84" H.– 4–TIER – MOBILE	DENSTOR	–	–	2	KES	–	
194.36		3	DRY SHELVING 26" x 100" x 84" H.–4–TIER – MOBILE	DENSTOR	–	–	2	KES	–	
195.36		2	DRY SHELVING 26" x 100" x 84" H.–5–TIER– MOBILE	DENSTOR	–	–	2	KES	–	
195.51		1	DRY SHELVING 26" x 100" x 84" H.– 5–TIER– FIXED	DENSTOR	–	–	2	KES	–	
196.06		1	SAFE – STANDARD BLDG. – LEFT HINGE	NKL	BSD4125FGXL–MC	–	–	OWNER	–	
197.00		2	STAINLESS STEEL HAND SINK	ADVANCE TABCO	7–PS–61	–	2	GC	REFER TO PLUMB. DWGS. FOR DETAILS, SOAP & TOWEL DISP. BY OTHERS	PROVIDE SIDE SPLASHES (7–PS–11) WHEN REQUIRED BY LOCAL CODE
197.01		1	HAND WASH TIMER	NATIONAL CONTROLS	TMD–T1715–120	E53595	–	KES	–	
197.03		2	STAINLESS STEEL HAND SINK – ADA	ADVANCE TABCO	7–PS–26	–	2	GC	REFER TO PLUMB. DWGS. FOR DETAILS, SOAP & TOWEL DISP. BY OTHERS	PROVIDE SIDE SPLASHES (7–PS–11D) WHEN REQUIRED BY LOCAL CODE
201.13		1	DRIVE–THRU CASH STAND – 21" D x 48" W	INTERMETRO	DT48–8	–	2	KES	SOLID WORK TOP, WIRE SHELVES	
201.15		1	READY NEXT DRIVE–THRU ASSEMBLY CART – 12" D x 36" W	INTERMETRO	DTPC–36	–	2	KES	–	
201.16		2	DRIVE–THRU ABS CART – LEFT HAND	KES	–	–	2	KES	–	ABS DRINK STAGING CART WITH TROUGH
201.18		2	CBB STAGING CART	INTERMETRO	MCD–CBB	–	2	KES	–	
201.21		1	BLZ FRONT COUNTER TABLE – 30" D x 14" W	INTERMETRO	MCD1430–BLZM	–	2	KES	W/ CASTERS AND OVERSHELF	
201.22		1	BLZ DRIVE THRU TABLE – 24" D x 14" W	INTERMETRO	MCD1430–BLZT	–	2	KES	–	
203.01		1	HEAT TREAT COMBINATION SHAKE/SUNDAE MACHINE	CARPIGIANNI	K3	SA4203	6	KES	SUPPLIED WITH CONE DISPENSER AND 7'–6" LONG CORD	
203.03		2	CUP/CONE DISPENSER	KES	–	–	2	KES	–	
205.08		1	BIC MACHINE	MULTPLEX	MA–8–2	SA12070	6	KES	–	
205.09		1	FROZEN BEVERAGE DISPENSER	IMI CORNELIUS	VIPER 3	SA2128	6	KES	–	
206.01		1	SPECIALTY BEVERAGE STANDOFF SHELF	KES	KES	–	2	KES	MOUNT SHELF @ 2'–6" AFF	
207.01		1	BLENDER – RAIL MOUNT – MCFLURRY	VITAMIX	056385	–	8	KES	SUPPLIED MOUNTING BRACKETS	
207.09		1	DESSERT BUTLER	KES	–	–	2	KES	–	–
211.00		1	DELIVERY TABLET	APPLE	IPAD	–	–	DELIVERY PARTNER	QUANTITY DEPENDENT UPON NUMBER OF DELIVERY PARTNERS	
214.02		1	82" 44U STATIONARY RACK	BY OWNER	BY OWNER	OEM	–	OWNER	–	
215.00		1	POS REGISTER – FRONT COUNTER	BY OWNER	BY OWNER	OEM	–	OWNER	INCLUDES MONITOR AND CPU	
215.02		4	POS REGISTER – 2 WINDOW D/T	BY OWNER	BY OWNER	OEM	–	OWNER	INCLUDES MONITOR AND CPU	
215.04		8	POS – KVS MONITOR	BY OWNER	BY OWNER	OEM	–	OWNER	–	
215.07		1	POS REGISTER – DELIVERY	BY OWNER	BY OWNER	OEM	–	OWNER	–	
216.00		9	POS – VIDEO MONITOR	BY OWNER	BY OWNER	E106786	–	OWNER	SUPPORTS INSTALLED BY GC IF REQUIRED – MOUNT @ 5'–8" AFF	FOR APPLICATIONS ABOVE ABS, MOUNT AT 6'–6" AFF
217.13		3	MERGE POINT MONITOR (DOUBLE DRIVE–THRU)	BY OWNER	BY OWNER	–	–	OWNER	MONITORS ARE REQUIRED FOR SIDE BY SIDE DRIVE THRU SYSTEM	–
217.14		1	POS – ORDER MONITOR (DOUBLE DRIVE THRU)	BY OWNER	BY OWNER	E106786	–	OWNER	SUPPORTS INSTALLED BY GC IF REQUIRED – MOUNT @ 5'–8" AFF	
217.19		1	WIRELESS HEADSET BASE STATION	HME	NEXEO HDX	–	–	OWNER	–	
217.24		1	DANGER POINT MONITOR (DOUBLE DRIVE–THRU)	BY OWNER	BY OWNER	–	–	OWNER	MONITORS ARE REQUIRED FOR SIDE BY SIDE DRIVE THRU SYSTEM	
217.26		1	ZOOM TIMER	HME	ZOOM NITRO	–	–	OWNER	–	
219.00		4	POS – RECEIPT PRINTER	BY OWNER	BY OWNER	OEM	–	OWNER	–	
219.05		7	STICKY LABEL PRINTER	BY OWNER	BY OWNER	OEM	–	OWNER	–	–
219.06		1	LABELING SYSTEM	TRANSACT	9700	–	–	KES	–	
220.00		1	POS – COIN DISPENSER	BY OWNER	BY OWNER	OEM	–	OWNER	–	
221.02		1	25" 12U NETWORK WALL RACK	TRIPP–LITE	SRW12USDP	OEM	–	OWNER	–	
221.09		1	O/O EQUIPMENT RACK	TRIPP–LITE	SRW12USDP	–	–	OWNER	AVAILABLE THROUGH POS SUPPLIER	
222.01		1	TIME CLOCK	BY OWNER	BY OWNER	OEM	–	OWNER	–	
223.07		1	WASHER – ELECTRIC	WHIRLPOOL	CAE2793BQ	–	–	KES	–	
225.03		1	OFFICE PACKAGE/DESK UNIT	DENSTOR	2000–0100	–	–	KES	WORK SURFACE 75", (1) DESK PEDESTAL W/ 2 DRAWERS AND (1) PEDESTAL W/ 3 DRAWERS	
225.04		1	OFFICE PACKAGE/ 2–WALL CABINETS	DENSTOR	2000–0200	–	–	KES	–	
225.05		1	OFFICE PACKAGE/HIGH WORK SURFACE	DENSTOR	2000–0300	–	–	KES	W/ (6) L–BRACKETS – WORK SURFACE IS 75" W. – CUT IN FIELD IF REQUIRED	
225.06		1	OFFICE PACKAGE W/3 DRAWER LATERAL FILE	DENSTOR	2000–0400	–	–	KES	–	
226.08		4	CREW LOCKERS –12" x 12" x 18" (6 HIGH)	DENSTOR	3–121278	–	2	KES	–	
226.09		1	CREW SMART LOCKERS	DENSTOR	C3	–	–	KES	LOCATED IN CREW ACCESSORY CABINET	
237.00		1	PIE DISPLAY	PRINCE CASTLE	524–MCDC	E341354	4	KES	PROVIDE WITH S/S PANEL	
700.02		2	MOP SINK	GC	–	–	2	GC	–	
700.07		1	WATER HEATER – GAS	GC	SEE RMKS	–	2	GC	REFER TO PLUMB. DWGS. FOR DETAILS	
700.09		1	ECONOMY OEP BOX W/MOUNTING HARDWARE	ACS	OEP–6	E71309	–	KES	6" W. x 24" D.	
700.10	X	1	BULK OIL SYSTEM	RTI	BI–3F	SEE RMKS	4	MANU–FACTURER	IF AVAILABLE IN MARKET – ETL ELECTRICAL RATING: 9900762	
700.11		1	OEP UTILITY PANEL W/ MOUNTING HARDWARE – STATIC BOX	H&K DALLAS	–	–	–	H&K DALLAS	2'–4"x2'–4" x4" HIGH BOX	
700.18	X	1	BULK OIL FILL BOX – 8"Wx10"H	RTI	–	–	–	MANU–FACTURER	SEE EXTERIOR ELEVATIONS FOR MOUNTING HEIGHT, INSTALLED BY GC	
700.27		1	RINSE STATION – NO SPOON WASH	H&K	HK94024	–	–	KES	–	

SEE SHEET K2.0 FOR EQUIPMENT LAYOUT AND TAG IDENTIFICATION

1 / K2.1 KITCHEN SCHEDULE

LINGLE DESIGN GROUP INC
158 WEST MAIN STREET
LENA, IL 61048
815.369.9155
1764 BLAKE ST
DENVER, CO 8020
303.974.5873
WWW.LINGLEDESIGN.COM

© ALL DRAWINGS AND WRITTEN MATERIAL CONTAINED HEREIN ARE THE PROPERTY OF THE LINGLE DESIGN GROUP, INC. THEY MAY NOT BE REVISED, COPIED, REUSED, OR DISCLOSED IN ANY MANNER WITHOUT WRITTEN AUTHORIZATION FROM THE ARCHITECT.

CHAD LINGLE LICENSED 7997 KANSAS ARCHITECT
10–15–25

STATE ID: 150405
NATIONAL #: 44936
PROJECT #: 25-079
DRAWN BY: RP
CHECKED BY: JK

DATE: 10/15/25 - PERMIT / BID SET

REVISIONS
1 11/12/25 - QC COMMENTS/PROTO UPDATE
2 02/12/26 - CITY COMMENTS
3 03/10/26 - DECOR UPDATE
4 08/02/26 - OWNER COMMENTS / PROTOTYPE UPDATES
△
△

CLIENT
McDonald's USA, LLC

PROTOTYPE
BB20 4590 MS-HB
ISSUE DATE 08/27/25

ADDRESS
2320 METROPOLITAN AVE
KANSAS CITY, KS 66106

SHEET TITLE
KITCHEN SCHEDULE

SHEET NUMBER:
K2.1